MOTION & CONTROL™

NSK

Ball Bearing Units

Dimension Table

HOUSING / BEARING				Page Nos.		Page Nos.		Page Nos.		Page Nos.		Page Nos.		Page Nos.		Page Nos.		Page Nos.		Page Nos.		Page Nos.
Set screw type	UC2	B312	UCP2 UCPL2	B4 B22	UCHP2 UCUP2	B26 B30			UCF2	B42	UCFC2	B66	UCFL2	B78	UCFA2 UCFH2	B92 B96			UCHB2	B110	UCT2	B114	UCT2- UCL2- UCM2-	B130 B132 B134	UCC2	B140
	UC3	B318	UCP3	B10					UCF3 UCFS3	B48 B60			UCFL3	B84							UCT3	B120	UCM3-	B136	UCC3	B142
	UCX	B324	UCPX	B16					UCFX	B54	UCFCX	B72	UCFLX	B90							UCTX	B126			UCCX	B146
	AS2	B328	ASPL2	B34			ASPP2 ASRPP2	B38 B40					ASFB2 ASFD2	B100 B102			ASPF2 ASRPF2 ASPFL2	B104 B106 B108					ASPT2-	B138		
Eccentric locking collar type	UEL2	B336	UELP2 UELPL2	B148 B158	UELHP2 UELUP2	B162 B164			UELF2 UELFU2	B174 B184	UELFC2	B194	UELFL2 UELFLU2	B198 B208							UELT2	B228			UELC2	B242
	UEL3	B340	UELP3	B152					UELF3 UELFS3	B178 B188			UELFL3	B202							UELT3	B232			UELC3	B244
	AEL2 JEL2	B346 B348	AELPL2 JELPL2	B166 B168			AELPP2 AELRPP2	B170 B172					AELFB2 AELFD2 JELFD2	B212 B214 B216			AELPF2 JELPF2 AELRPF2 AELPFL2 JELPFL2	B218 B220 B222 B224 B226					AELPT2- JELPT2-	B238 B240		
Adapter type	UK2	B354	UKP2	B248					UKF2	B260	UKFC2	B276	UKFL2	B284							UKT2	B294			UKC2	B306
	UK3	B358	UKP3	B252					UKF3 UKFS3	B264 B272			UKFL3	B288							UKT3	B298			UKC3	B308
	UKX	B362	UKPX	B256					UKFX	B268	UKFCX	B280	UKFLX	B292							UKTX	B302			UKCX	B310
Other bearings					AR2	B332	REL2	B350	UCS2	B366	UCS3	B370	ASS2	B374	UELS2	B376	UELS3	B380	AELS2	B384	JELS2	B386			CS2	B388

MOTION & CONTROL™

NSK

Ball Bearing Units

CAT. No. E1154e

TECHNICAL DATA INDEX

Page

1. Construction A3

2. Design Features and Advantages A4

2.1 Maintenance free type A4

2.2 Relubricatable type A4

2.3 Special sealing feature A4

2.4 Secure fitting A5

2.5 Self-aligning A5

2.6 Higher rated load capacity A5

2.7 Light weight yet strong housing A5

2.8 Easy mounting A5

2.9 Accurate fitting of the housing A5

2.10 Bearing replaceability A5

3. Tolerance A6

3.1 Tolerances of ball bearings for the unit A6

3.2 Tolerances of housings A9

4. Basic Load Rating and Life A13

4.1 Bearing life A13

4.2 Basic rated life and basic dynamic load rating A13

4.3 Basic static load rating A15

4.4 Allowable static equivalent load A15

5. Bearing Internal Clearance A16

5.1 Bearing internal clearance A16

5.2 Internal clearance selection A16

5.3 Bearing internal clearance selection standards A17

6. Lubrication A19

6.1 Maximum permissible speed of rotation A19

6.2 Replenishment of grease A19

6.3 Grease fitting A21

6.4 Standard location of the grease fitting A22

7. Recommended Torques for Tightening Set Screws A23

1. Construction

The **NSK** bearing unit is a combination of a radial ball bearing, seal, and a housing of high-grade cast iron or pressed steel, which comes in various shapes.

The outer surface of the bearing and the internal surface of the housing are spherical, so that the unit is self-aligning.

The inside construction of the ball bearing for the unit is such that steel balls and retainers of the same type as in series 62 and 63 of the deep groove ball bearing are used. A duplex seal consisting of a combination of an oil-proof synthetic rubber seal and a slinger is provided on both sides.

Depending on the type, the following methods of fitting to the shaft are employed:

(1) The inner ring is fastened onto the shaft in two places by set screws.

(2) The inner ring has a tapered bore and is fitted to the shaft by means of an adapter.

(3) In the eccentric locking collar system the inner ring is fastened to the shaft by means of eccentric grooves provided at the side of the inner ring and on the collar.

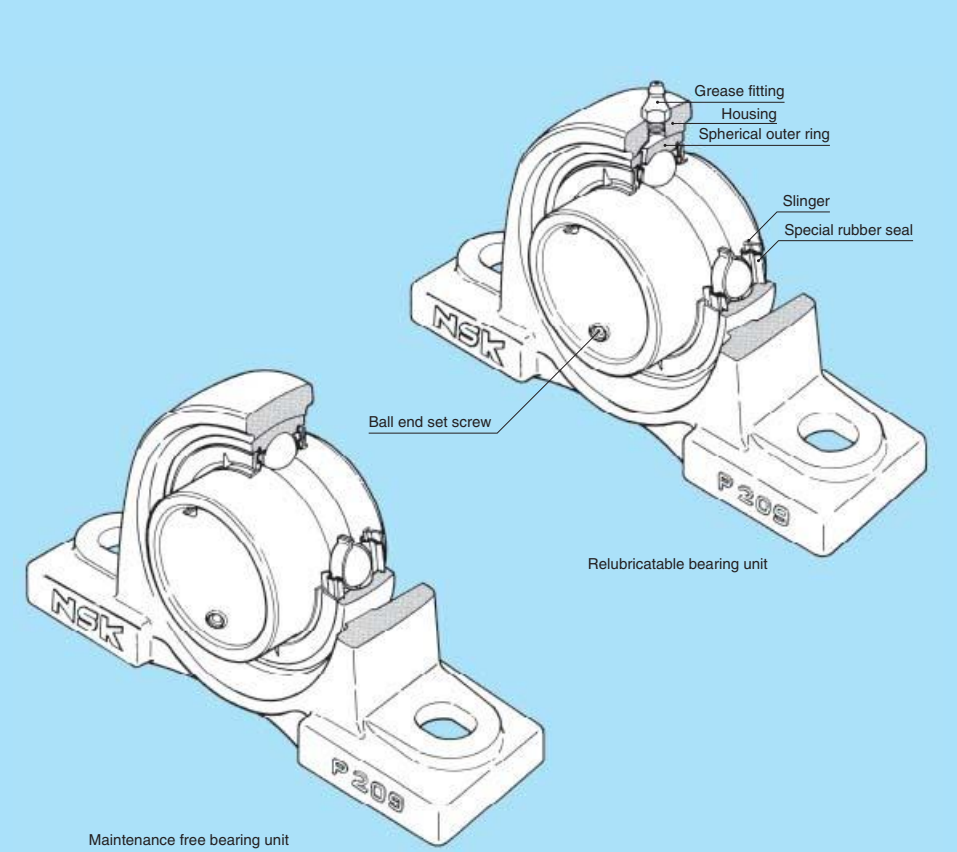

Fig. 1.1

2. Design Features and Advantages

2.1 Maintenance free type

The **NSK** Maintenance free bearing unit contains a high-grade lithium-based grease, good for use over a long period, which is ideally suited to sealed-type bearings. Also provided is an excellent sealing device, which prevents any leakage of grease or penetration of dust and water from outside.

It is designed so that the rotation of the shaft causes the sealed-in grease to circulate through the inside space, effectively providing maximum lubrication. The lubrication effect is maintained over a long period with no need for replenishment of grease.

To summarize the advantages of the **NSK** maintenance free bearing unit:

(1) As an adequate amount of good quality grease is sealed in at the time of manufacture, there is no need for replenishment. This means savings in terms of time and maintenance costs.
(2) Since there is no need for any regreasing facilities, such as piping, a more compact design is possible.
(3) The sealed-in design eliminates the possibility of grease leakage, which could lead to stained products.

2.2 Relubricatable type

The **NSK** relubricatable type bearing unit has an advantage over other simillar units being so designed as to permit regreasing even in the case of misalignment of 2° to the right or left. The hole through which the grease fitting is mounted usually causes structural weakening of the housing.

However, as a result of extensive testing, in the **NSK** bearing unit the hole is positioned so as to minimize this adverse effect. In addition, the regreasing groove has been designed to minimize weakening of the housing.

While the **NSK** maintenance free type bearing unit is satisfactory for use under normal operating conditions in-doors, in the following circumstances it is necessary to use the relubricatable type bearing unit:

(1) Cases where the temperature of the bearing rises above 100°C, 212°F:
*-Normal temperature of up to 130°C, 266°F heat-resistant bearing units.
(2) Cases where there is excessive dust, but space does not permit using a bearing unit with a cover.
(3) Cases where the bearing unit is constantly exposed to splashes of water or any other liquid, but space does not permit using a bearing unit with a cover.
(4) Cases in which the humidity is very high, and the machine in which the bearing unit is used is run only intermittently.
(5) Cases involving a heavy load of which the C_r/P_r value is about 10 or below, and the speed is 10 min^{-1} or below, or the movement is oscillatory.
(6) Cases where the number of revolutions is relatively high and the noise problem has to be considered; for example, when the bearing is used with the fan of an air conditioner.

2.3 Special sealing feature

2.3.1 Standard bearing units

The sealing device of the ball bearing for the **NSK** bearing unit is a combination of a heat-resistant and oil-proof synthetic rubber seal and a slinger of an exclusive design.

The seal, which is fixed in the outer ring, is steel-reinforced, and its lip, in contanct with the inner ring, is designed to minimize frictional torque.

The slinger is fixed to the inner ring of the bearing with which it rotates. There is a small clearance between its periphery and the outer ring.

These two types of seals on both sides of the bearing prevent grease leakage, and foreign matter is prevented from entering the bearing from outside.

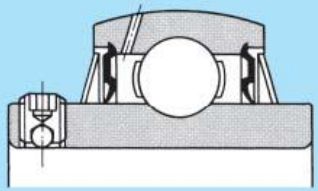

Fig. 2.1

2.3.2 Bearing units with covers

The **NSK** bearing unit with a cover consists of a standard bearing unit and an outside covering for extra protection against dust. Special consideration has been given to its design with respect to dust-proofing.

Sealing devices are provided in both the bearing and the housing, so that units of this type operate satisfactorily even in such adverse environments as flour mills, steel mills, foundries, galvanizing plants and chemical plants, where excessive dust is produced and/or liquids are used. They are also eminently suitable for outdoor environments where dust and rain are inevitable, and in heavy industrial machinery such as construction and transportation equipment.

The rubber seal of the cover contacts with the shaft by its two lips, as shown in Fig. 2.2 and 2.3 By filling the groove between the two lips with grease, an excellent sealing effect is obtained and, at the same time, the contacting portions of the lips are lubricated. Furthermore, the groove is so designed that when the shaft is inclined the rubber seal can move in the radial direction.

When bearing units are exposed to splashes of water rather than to dust, a drain hole (5 to 8 mm, 0.2 to 0.3 inches in diameter) is provided at the bottom of the cover, and grease should be applied to the side of the bearing itself instead of into the cover.

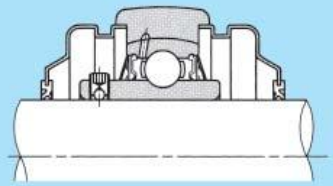

Fig. 2.2 Pressed steel cover

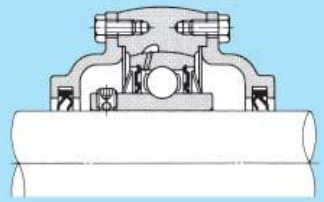

Fig. 2.3 Cast iron cover

2.4 Secure fitting

Fastening the bearing to the shaft is effected by tightening the ball-end set screw, situated on the inner ring. This is a unique feature which prevents loosening, even if the bearing is subjected to intense vibrations and shocks.

2.5 Self-aligning

With the **NSK** bearing unit, the outer surface of the ball bearing and the inner surface of the housing are spherical, thus this bearing unit has self-aligning characteristic. Any misalignment of axis that may arise from poor workmanship on the shaft or errors in fitting will be properly adjusted.

2.6 Higher rated load capacity

The bearing used in the unit is of the same internal construction as those in bearing series 62 and 63, and is capable of accommodating axial load as well as radial load, or composite load. The rated load capacity of this bearing is considerably higher than that of the corresponding self-aligning ball bearings used for standard plummer blocks.

2.7 Light weight yet strong housing

Housings for **NSK** bearing units come in various shapes. They consist of either high-grade cast iron, one-piece casting, or of precision finished pressed steel, the latter being lighter in weight. In either case, they are practically designed to combine lightness with maximum strength.

2.8 Easy mounting

The **NSK** bearing unit is an integrated unit consisting of a bearing and a housing.

As the bearing is prelubricated at manufacture with the correct amount of high-grade lithium base, it can be mounted on the shaft just as it is. It is sufficient to carry out a short test run after mounting.

2.9 Accurate fitting of the housing

In order to simplify the fitting of the pillow block and flange type bearing units, the housings are provided with a seat for a dowel pin, which may be utilized as needed.

2.10 Bearing replaceability

The bearing used in the **NSK** bearing unit is replaceable. In the event of bearing failure, a new bearing can be fitted to the existing housing.

3. Tolerance

The tolerances of the **NSK** bearing units are in accordance with the following JIS specifications:

3.1 Tolerances of ball bearings for the unit

The tolerances of ball bearings used in the unit are shown in the following tables, 3.1 to 3.4.

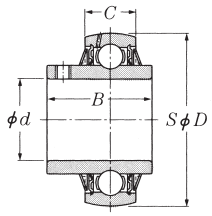

Set screw type

Table 3.1 (1) Cylindrical bore (UC, UCS, AS, ASS, UEL, UELS, AEL, AELS) Unit: μm/0.0001 inch

Nominal bore diameter d				Cylindrical bore					Radial runout K_{ia} (reference)
				Bore diameter			Width		
over		incl.		Δ_{dmp} Deviations		V_{dp} Variations	Δ_{Bs}, Δ_{Cs} Deviations(reference)		
mm	inch	mm	inch	high	low	max.	high	low	max.
10	0.3937	18	0.7087	+15	0	10	0	−120	15
				+ 6	0	4	0	− 47	6
18	0.7087	31.75	1.2500	+18	0	12	0	−120	18
				+ 7	0	5	0	− 47	7
31.75	1.2500	50.8	2.0000	+21	0	14	0	−120	20
				+ 8	0	6	0	− 47	8
50.8	2.0000	80	3.1496	+24	0	16	0	−150	25
				+ 9	0	6	0	− 59	10
80	3.1496	120	4.7244	+28	0	19	0	−200	30
				+11	0	7	0	− 79	12
120	4.7244	180	7.0866	+33	0	22	0	−250	35
				+13	0	9	0	− 98	14

Remarks Symbols
Δ_{dmp}:Mean bore diameter deviation V_{dp}:Bore diameter variation Δ_{Bs}:Inner ring width deviation Δ_{Cs}:Outer ring width deviation

Table 3.1 (2) Cylindrical bore (AR, JEL, JELS, REL) Unit: μm/0.0001 inch

Nominal bore diameter d				Cylindrical bore diameter		
over		incl.		Δ_{dmp} Deviations		V_{dp} Variations
mm	inch	mm	inch	high	low	max.
10	0.3937	18	0.7087	+13	0	6
				+ 5	0	2
18	0.7087	31.75	1.2500	+13	0	6
				+ 5	0	2
31.75	1.2500	50.8	2.0000	+13	0	6
				+ 5	0	2
50.8	2.0000	80	3.1496	+15	0	8
				+ 6	0	3

Table 3.1 (3) Cylindrical bore (CS) Unit: μm/0.0001 inch

Nominal bore diameter d				Cylindrical bore					Radial runout K_{ia} (reference)
				Bore diameter			Width		
over		incl.		Δ_{dmp} Deviations		V_{dp} Variations	Δ_{Bs}, Δ_{Cs} Deviations(reference)		
mm	inch	mm	inch	high	low	max.	high	low	max.
10	0.3937	18	0.7087	0	− 8	10	0	−120	15
				0	− 3	4	0	− 47	6
18	0.7087	31.75	1.2500	0	−10	12	0	−120	18
				0	− 4	5	0	− 47	7
31.75	1.2500	50.8	2.0000	0	−12	14	0	−120	20
				0	− 5	6	0	− 47	8

Table 3.2 Tapered bore (UK,UKS) Unit: μm/0.0001 inch

Nominal bore diameter d				Δ_{dmp} Deviations		$\Delta_{d1mp}-\Delta_{dmp}$		V_{dp} (1)
over		incl.						
mm	inch	mm	inch	high	low	max.	min.	max.
18	0.7087	30	1.1811	+21	0	+21	0	13
				+ 8	0	+ 8	0	5
30	1.1811	50	1.9685	+25	0	+25	0	15
				+10	0	+10	0	6
50	1.9685	80	3.1496	+30	0	+30	0	19
				+12	0	+12	0	7
80	3.1496	120	4.7244	+35	0	+35	0	25
				+14	0	+14	0	10
120	4.7244	180	7.0866	+40	0	+40	0	31
				+16	0	+16	0	12

Note (1) To be applied for all radial flat surfaces of tapered hole.
Remarks 1. To be applied for tapered holes of 1/12.
2. Symbols of quantity or values

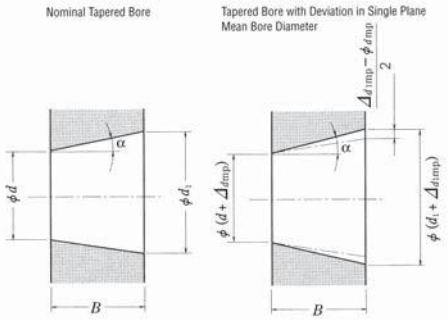

d : Nominal Bore Diameter
d_1 : Theoretical Diameter of Larger End of Tapered Bore
$d_1 = d + 1/12\,B$
Δ_{dmp} : Single Plane Mean Bore Diameter Deviation in Theoretical Diameter of Smaller End of Bore
Δ_{d1mp} : Single Plane Mean Bore Diameter Deviation in Theoretical Diameter of Larger End of Bore
V_{dp} : Bore diameter variation in a single radial plane
B : Nominal Inner Ring width
α : Half of Taper Angle of Tapered Bore

α=2°23′9.4″
=2.38594°
=0.041643 rad

Table 3.3 Outer ring Unit: μm/0.0001 inch

Nominal outside diameter D over mm	over inch	incl. mm	incl. inch	Mean outside diameter deviation Δ_{Dm} high	low	Radial runout K_{ea} (reference) max.
18	0.7087	30	1.1811	0	− 9	15
				0	− 4	6
30	1.1811	50	1.9685	0	−11	20
				0	− 4	8
50	1.9685	80	3.1496	0	−13	25
				0	− 5	10
80	3.1496	120	4.7244	0	−15	35
				0	− 6	14
120	4.7244	150	5.9055	0	−18	40
				0	− 7	16
150	5.9055	180	7.0866	0	−25	45
				0	−10	18
180	7.0866	250	9.8425	0	−30	50
				0	−12	20
250	9.8425	315	12.4016	0	−35	60
				0	−14	24

Remarks The low deviation of outside diameter D_m does not apply within the distance of 1/4 the width of the outer ring from the side.

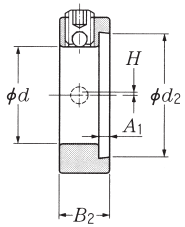

Eccentric locking collar

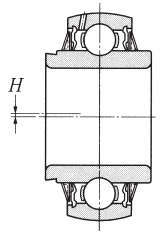

Eccentric locking collar type

Table 3.4 Eccentric locking collar Unit: mm/inch

Nominal bore diameter d over mm	over inch	incl. mm	incl. inch	Bore diameter deviation Δ_{ds} high	low	Small bore diameter of eccentric surface deviation Δ_{d2s} high	low	Eccentricity deviation Δ_{Hs} high	low	Collar width deviation Δ_{B2s} high	low	Collar eccentric surface width deviation Δ_{A1s} high	low
10	0.3937	36.512	1.4375	+0.250	+0.025	+0.3	0	+0.1	−0.1	+0.270	−0.270	0	−0.180
				+0.010	+0.001	+0.012	0	+0.004	−0.004	+0.011	−0.011	0	−0.007
36.512	1.4375	55.562	2.1875	+0.300	+0.025	+0.4	0	+0.1	−0.1	+0.330	−0.330	0	−0.180
				+0.012	+0.001	+0.016	0	+0.004	−0.004	+0.013	−0.013	0	−0.007
55.562	2.1875	61.912	2.4375	+0.300	+0.025	+0.4	0	+0.1	−0.1	+0.330	−0.330	0	−0.220
				+0.012	+0.001	+0.016	0	+0.004	−0.004	+0.013	−0.013	0	−0.009

3.2 Tolerances of housings

Table 3.5 Spherical bore diameter of housings Unit: μm/0.0001 inch

Nominal spherical bore diameter D_a over mm	over inch	incl. mm	incl. inch	D_a Deviations Δ_{Damp} Tolerance class H7 high	low	Tolerance class J7 high	low	Tolerance class K7 high	low
30	1.1811	50	1.9685	+25	0	+14	−11	+ 7	−18
				+10	0	+ 6	− 4	+ 3	− 7
50	1.9685	80	3.1496	+30	0	+18	−12	+ 9	−21
				+12	0	+ 7	− 5	+ 4	− 8
80	3.1496	120	4.7244	+35	0	+22	−13	+10	−25
				+14	0	+ 9	− 5	+ 4	−10
120	4.7244	180	7.0866	+40	0	+26	−14	+12	−28
				+16	0	+10	− 6	+ 5	−11
180	7.0866	250	9.8425	+46	0	+30	−16	+13	−33
				+18	0	+12	− 6	+ 5	−13
250	9.8425	315	12.4016	+52	0	+36	−16	+16	−36
				+20	0	+14	− 6	+ 6	−14

Remarks 1.Symbols
Δ_{Damp}:Mean spherical bore diameter deviation
2.Dimensional tolerances for spherical bore diameter of housing are classified as H7 for clearance fit, and J7 for intermediate fit.
3.Spherical bore diameter of housings are finished by following tolerance classes such as 52mm or less : K7, over 52mm and 180mm or less : J7, and over 180mm : H7 respectively.

Table 3.6 Pillow block housings (P, PL, HP, UP) Unit: mm/inch

Housing numbers						H Deviations Δ_{Hs}
P203	—	—	—	—	—	±0.15 ±0.006
P204	—	—	HP204	UP204	PL204	
P205	P305	PX05	HP205	UP205	PL205	
P206	P306	PX06	HP206	UP206	PL206	
P207	P307	PX07	HP207	UP207	PL207	
P208	P308	PX08	HP208	UP208	—	
P209	P309	PX09	HP209	UP209	PL209	
P210	P310	PX10	HP210	UP210	PL210	
P211	P311	PX11	—	—	—	±0.2 ±0.008
P212	P312	PX12	—	—	—	
P213	P313	PX13	—	—	—	
P214	P314	PX14	—	—	—	
P215	P315	PX15	—	—	—	
P216	P316	PX16	—	—	—	
P217	P317	PX17	—	—	—	
P218	P318	PX18	—	—	—	
—	P319	—	—	—	—	±0.3 ±0.012
—	P320	PX20	—	—	—	
—	P321	—	—	—	—	
—	P322	—	—	—	—	
—	P324	—	—	—	—	
—	P326	—	—	—	—	
—	P328	—	—	—	—	

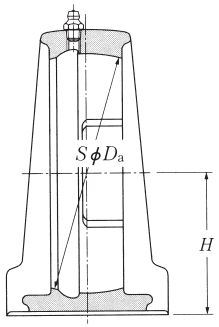

Remarks 1.H is height of the shaft center line.
2.This table can be applied for bearing units with dust covers.

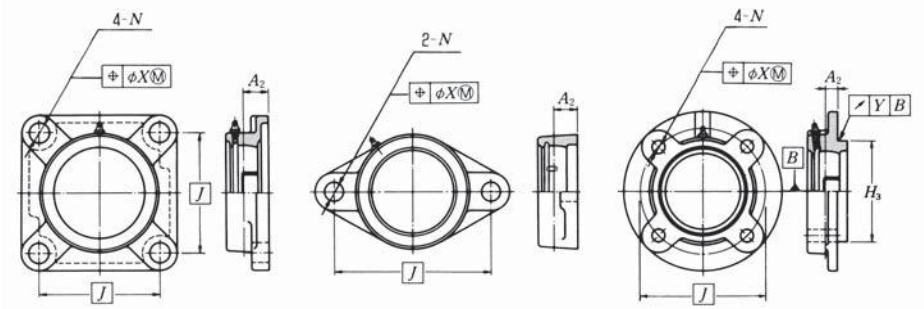

(F,FU,FS) (FL,FLU,FB,FD) (FC)

Table 3.7 (1) Flange unit housings (F,FU,FC,FS,FL,FLU,FB,FD)

Unit: mm/inch

Housing numbers								location tolerance of bolt hole X	A_2 Deviations Δ_{A2s}	H_3 Deviations Δ_{H3s} FC2 high	FC2 low	FS3 high	FS3 low	FCX high	FCX low	Radial runout of spigot joint Y
—	—	—	—	—	—	—	FD201	0.7 0.028	±0.5 ±0.020	0 0	−0.046 −0.0018	—	—	—	—	0.2 0.008
F204	—	—	FC204	—	FL204	—	FD204									
F205	F305	FX05	FC205	FS305	FL205	FL305	FD205					0 0	−0.046 −0.0018	0 0	−0.046 −0.0018	
F206	F306	FX06	FC206	FS306	FL206	FL306	FD206					0 0	−0.054 −0.0021	0 0	−0.054 −0.0021	
F207	F307	FX07	FC207	FS307	FL207	FL307	FD207									
F208	F308	FX08	FC208	FS308	FL208	FL308	—			0 0	−0.054 −0.0021					
F209	F309	FX09	FC209	FS309	FL209	FL309	—									
F210	F310	FX10	FC210	FS310	FL210	FL310	—					0 0	−0.063 −0.0025	0 0	−0.063 −0.0025	
F211	F311	FX11	FC211	FS311	FL211	FL311	—	1 0.039	±0.8 ±0.032							0.3 0.012
F212	F312	FX12	FC212	FS312	FL212	FL312	—									
F213	F313	FX13	FC213	FS313	FL213	FL313	—									
F214	F314	FX14	FC214	FS314	FL214	FL314	—			0 0	−0.063 −0.0025					
F215	F315	FX15	FC215	FS315	FL215	FL315	—									
F216	F316	FX16	FC216	FS316	FL216	FL316	—					0 0	−0.072 −0.0028			
F217	F317	FX17	FC217	FS317	FL217	FL317	—									
F218	F318	FX18	FC218	FS318	FL218	FL318	—			0 0	−0.072 −0.0028			0 0	−0.072 −0.0028	
—	F319	—	—	FS319	—	FL319	—									0.4 0.016
—	F320	FX20	—	FS320	—	FL320	—									
—	F321	—	—	FS321	—	FL321	—					0 0	−0.081 −0.0032			
—	F322	—	—	FS322	—	FL322	—			—	—			—	—	
—	F324	—	—	FS324	—	FL324	—									
—	F326	—	—	FS326	—	FL326	—					0 0	−0.089 −0.0035			
—	F328	—	—	FS328	—	FL328	—									

Remarks
1. J is the bolt hole's center line dimension,and P.C.D. A_2 is distance between the center line of spherical bore diameter of the housing and mounting surfaces,and H_3 is outside diameter of the spigot joint.
2. Radial runout of spigot joint is applied for flange units with spigot joints.
3. For FU2 and FLU2 types,tolerances for F2 shall be applied.
4. For FCX and FLX types,tolerances for FX shall be applied.
5. This table can be applied for bearing units with dust covers.

Table 3.7 (2) Flange unit housings (diameter of bolt hole)

Housing type	Nominal bore diameter N over mm	over inch	incl. mm	incl. inch	N Deviations Δ_{Ns} mm	inch
F,FU,FC,FS FA,FH,FLU	—	—	30	1.1811	±0.2	±0.008
	30	1.1811	41	1.6142	±0.3	±0.012

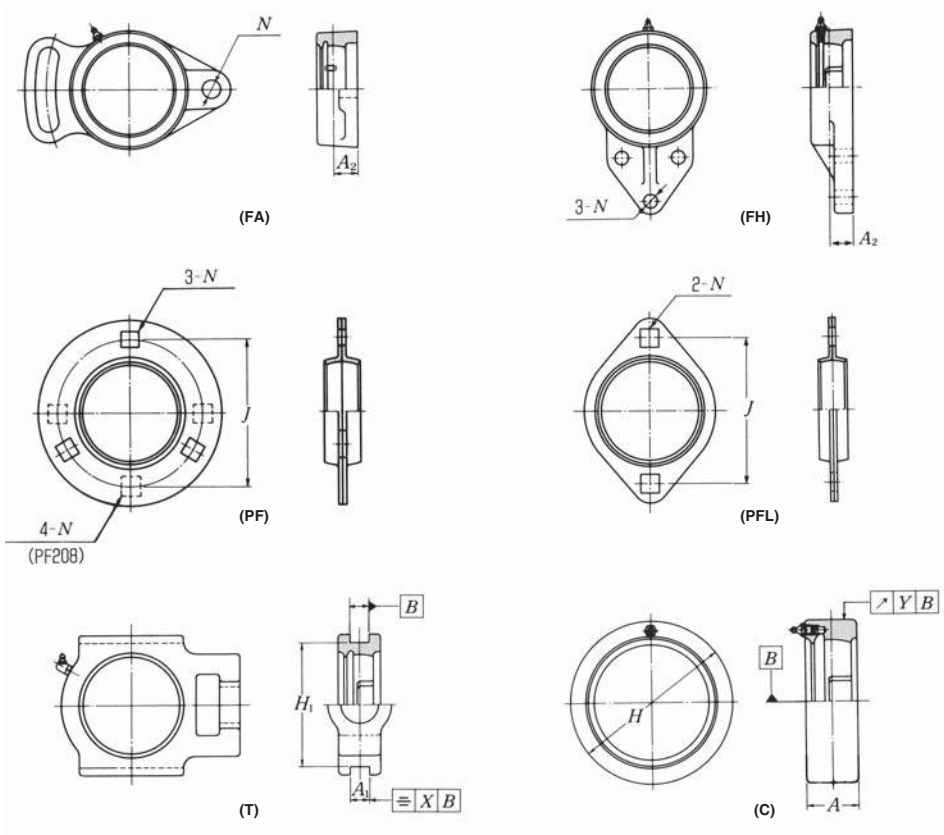

Table 3.8 Flange unit housings (FH,FA,PF,PFL)

Unit: mm/inch

Housing numbers	A_2 Deviations Δ_{A2s}	Housing numbers	J Deviations Δ_{Js}	N Deviations Δ_{Ns}
—	±0.5 ±0.020	PF203	±0.4 ±0.016	±0.25 ±0.010
FH,FA204		PF204		
FH,FA205		PF205		
FH,FA206		PF206		
FH,FA207		PF207		
FH,FA208		PF208		
FH,FA209		PFL203		
FH,FA210		PFL204		
		PFL205		
FA211	±0.8 ±0.032	PFL206		
		PFL207		

Remarks
1. A_2 is distance between the center line of spherical bore diameter of housings.
2. J is the bolt hole's center line dimension.

Table 3.9 Take-up unit housings (T) Unit: mm/inch

Housing numbers			A_1 Deviations Δ_{A1s}	H_1 Deviations Δ_{H1s} high	H_1 Deviations Δ_{H1s} low	Parallelism of guide X
T204	—	—	+0.2 0 +0.008 0	0 0	−0.5 −0.020	0.5 0.020
T205	T305	TX05				
T206	T306	TX06				
T207	T307	TX07				
T208	T308	TX08				
T209	T309	TX09				
T210	T310	TX10				
T211	T311	TX11	+0.3 0 +0.012 0	0 0	−0.8 −0.032	0.6 0.024
T212	T312	TX12				
T213	T313	TX13				
T214	T314	TX14				
T215	T315	TX15				
T216	T316	TX16				
T217	T317	TX17				
—	T318	—				
—	T319	—				0.7 0.028
—	T320	—				
—	T321	—				
—	T322	—				
—	T324	—				0.8 0.032
—	T326	—				
—	T328	—				

Remarks 1. A_1 is the width of guide rail grooves.
2. H_1 is the maximum span of guide rail grooves.
3. This table can be applied for bearing units with dust covers.

Table 3.10 Cartridge unit housings (C) Unit: mm/inch

Housing numbers			H Deviations Δ_{Hs} C2 Series high	C2 Series low	C3 Series high	C3 Series low	CX Series high	CX Series low	Radial runout of outside surface Y	A Deviations Δ_{As}
C204	—	—	0 0	−0.030 −0.0012	—	—	—	—	0.2 0.008	±0.2 ±0.008
C205	C305	CX05			0 0	−0.035 −0.0014	0 0	−0.035 −0.0014		
C206	C306	CX06	0 0	−0.035 −0.0014						
C207	C307	CX07								
C208	C308	CX08								
C209	C309	CX09			0 0	−0.040 −0.0016	0 0	−0.040 −0.0016		
C210	C310	CX10								
C211	C311	CX11	0 0	−0.040 −0.0016					0.3 0.012	±0.3 ±0.012
C212	C312	CX12								
C213	C313	—								
—	C314	—	—	—	0 0	−0.046 −0.0018	—	—		
—	C315	—								
—	C316	—								
—	C317	—								
—	C318	—								
—	C319	—								
—	C320	—			0 0	−0.052 −0.0020			0.4 0.016	
—	C321	—								
—	C322	—								
—	C324	—			0 0	−0.057 −0.0022				
—	C326	—								
—	C328	—								

Remarks 1. H is the outside diameter of cartridge housings.
2. A is width of cartridge housings.

4. Basic Load Rating and Life

4.1 Bearing life

Even in bearings operating under normal conditions, the surfaces of the raceway and rolling elements are constantly being subjected to repeated compressive stresses which cause flaking of these surfaces to occur. This flaking is due to material fatigue and will eventually cause the bearings to fail. The effective life of a bearing is usually defined in terms of the total number of revolutions a bearing can undergo before flaking of either the raceway surface or the rolling element surfaces occurs.

Other causes of bearing failure are often attributed to problems such as seizing, abrasions, cracking, chipping, gnawing, rust, etc. However, these so called "causes" of bearing failure are usually themselves caused by improper installation, insufficient or improper lubrication, faulty sealing or inaccurate bearing selection. Since the above mentioned "cause" of bearing failure can be avoided by taking the proper precautions, and are not simply caused by material fatigue, they are considered separately from the flaking aspect.

4.2 Basic rated life and basic dynamic load rating

A group of seemingly identical bearings when subjected to identical load and operating conditions will exhibit a wide diversity in their durability.

This "life" disparity can be accounted for by the difference in the fatigue of the bearing material itself. This disparity is considered statistically when calculating bearing life, and the basic rated life is defined as follows.

The basic rated life is based on a 90% statistical model which is expressed as the total number of revolutions 90% of the bearings, in an identical group of bearings subjected to identical operating conditions, will attain or surpass before flaking due to material fatigue occurs. For bearings operating at fixed constant speeds, the basic rated life (90% reliability) is expressed in the total number of hours of operation.

The basic dynamic load rating is an expression of the load capacity of a bearing based on a constant load which the bearing can sustain for one million revolutions (the basic life rating). For radial bearings this rating applies to pure radial loads, and for thrust bearings it refers to pure axialloads. The basic dynamic load ratings given in the bearing tables of this catalog are for bearings constructed of standard bearing materials, using standard manufacturing techniques. Please consult **NSK** for basic load ratings of bearings constructed of special materials or using special manufacturing techniques.

The relationship between the basic rated life, the basic dynamic load rating and the bearing load is given in formula (4.1).

$$L_{10} = \left(\frac{C_r}{P_r}\right)^3 \cdots\cdots (4.1)$$

where,
L_{10} : Basic rated life 10^6 revolutions
C_r : Basic dynamic rated load, N, lbf
P_r : Equivalent dynamic load, N, lbf

The basic rated life can also be expressed in terms of hours of operation (revolution), and is calculated as shown in formula (4.2).

$$L_{10h} = 500 f_h^3 \cdots\cdots (4.2)$$

$$f_h = f_n \frac{C_r}{P_r} \cdots\cdots (4.3)$$

$$f_n = \left(\frac{33.3}{n}\right)^{1/3} \cdots\cdots (4.4)$$

where,
L_{10h} : Basic rated life, h
f_h : Life factor
f_n : Speed factor
n : Rotational speed, min^{-1}

Formula (4.2) can also be expressed as shown in formula (4.5).

$$L_{10h} = \frac{10^6}{60n}\left(\frac{C_r}{P_r}\right)^3 \cdots\cdots (4.5)$$

The relation between rotational speed n and speed factor f_n as well as the relation between the basic rated life L_{10h} and the life factor f_h is shown in Fig. 4.1.

When several bearings are incorporated in machines or equipment as complete units, all the bearings in the unit are considered as a whole when computing bearing life (see formula 4.6). The total bearing life of the unit is a life rating based on the viable lifetime of the unit before even one of the bearings fails due to rolling contact fatigue.

$$L = \frac{1}{\left(\frac{1}{L_1^{1.1}} + \frac{1}{L_2^{1.1}} + \cdots\cdots + \frac{1}{L_n^{1.1}}\right)^{1/1.1}} \quad \cdots\cdots\cdots(4.6)$$

where,
L :Total life of the whole bearing assembly,h
L_1, L_2, $\cdots$ L_n: Rated life of bearings 1, 2,$\cdots$ n, h

In the case where load and the number of revolutions change at regulated intervals, after finding the rated life L_1, L_2, $\cdots$, L_n under conditions of n_1, P_1: n_2, P_2: $\cdots$ n_n, P_n: the built-in life L_m can be given by the formula (4.7).

$$L_1 = \frac{10^6}{60n_1}\left(\frac{C_r}{P_1}\right)^3$$

$$L_2 = \frac{10^6}{60n_2}\left(\frac{C_r}{P_1}\right)^3$$

$$\vdots$$

$$L_n = \frac{10^6}{60n_n}\left(\frac{C_r}{P_n}\right)^3$$

$$L_m = \left(\frac{\Phi_1}{L_1} + \frac{\Phi_2}{L_2} + \cdots\cdots + \frac{\Phi_n}{L_n}\right)^{-1} \quad \cdots\cdots\cdots\cdots\cdots\cdots(4.7)$$

where,
L_1, L_2, $\cdots$ L_n : Rated life under condition 1, 2,$\cdots$ n, h
n_1, n_2, $\cdots$ n_n : Number of revolutions under condition 1, 2, $\cdots$ n, min^{-1}
P_1, P_2, $\cdots$ P_n : Equivalent load under condition 1, 2, $\cdots$ n, N, lbf
Φ_1, Φ_2, $\cdots\Phi_n$: Ratio of condition 1, 2, $\cdots$ n accounting for the total operating time
L_m : Built-in life, h

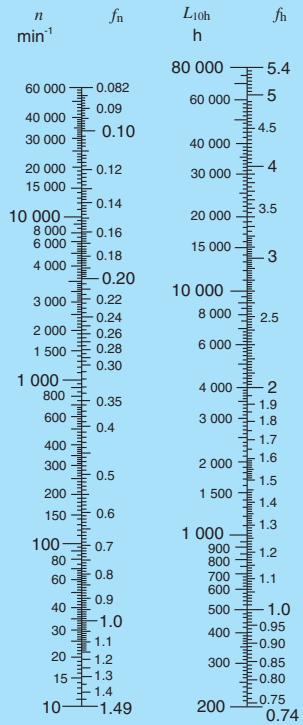

Fig. 4.1 Bearing life rating scale

Table 4.1 Rating life for applications

Service classification	Machine application	Life time L_n
Machines used occasionally	Door mechanisms,Garage shutter	500
Equipment for short period or intermittent service-interruption permissible	Household appliances,Electric hand tools, Agricultural machines,Lifting tackles in shops	4 000 to 8 000
Intermittent service machines-high reliability	Power-Station auxiliary equipment,Elevators, Conveyors,Deck cranes	8 000 to 14 000
Machines used for 8 hours a day,but not always in full operation	Ore wagon axles,important gear units	14 000 to 20 000
Machines fully used for 8 hours	Blowers,General machinery in shops,Continuous operation cranes	20 000 to 30 000
Machines continuously used for 24 hours a day	Compressors,Pumps	50 000 to 60 000
Machines continuously used for 24 hours a day with maximum reliability	Power-station equipment,Water-supply equlpment for urban areas,Mine ventilators	100 000 to 200 000

4.3 Basic static load rating

When stationary rolling bearings are subjected to static loads, they suffer from partial permanent deformation of the contact surfaces at the contact point between the rolling elements and the raceway. The amount of deformity increases as the load increases, and if this increase in load exceeds certain limits, the subsequent smooth operation of the bearing is impaired.

It has been found through experience that a permanent deformity of 0.0001 times the diameter of the rolling element, occurring at the most heavily stressed contact point between the raceway and the rolling elements, can be tolerated without any impairment in running efficiency.

The basic rated static load refers to a fixed static load limit at which a specified amount of permanent deformation occurs. It applies to pure radial loads for radial bearings. The maximum applied load values for contact stress occurring at the rolling element and raceway contact points are given below.

For ball bearings (for bearing unit): 4 200 MP_a

4.4 Allowable static equivalent load

Generally the static equivalent load which can be permitted is limited by the basic static rated load as stated in Section 4.3. However, depending on requirements regarding friction and smooth operation, these limits may be greater or lesser than the basic static rated load.

In the following formula (4.8) and Table 4.2 the safety factor S_0 can be determined considering the maximum static equivalent load.

$$S_0 = \frac{C_0}{P_{0\,max}} \quad \cdots\cdots\cdots\cdots\cdots\cdots\cdots\cdots\cdots\cdots(4.8)$$

where,
S_0 : Safety factor
C_0 : Basic static rated load, N, lbf
$P_{0\,max}$: Maximum static equivalent load, N, lbf

Table 4.2 Minlmum safety factor values S_0

Operating conditions	Ball bearings
High rotational accuracy demand	2
Normal rotating accuracy demand (Universal application)	1
Siight rotational accuracy deterioration permitted (Lcw speed,heavy loading,etc.)	0.5

Remarks When vibration and/or shock loads are present, a load factor based on the shock load needs to be included in the $P_{0\,max}$ value.

5. Bearing Internal Clearance

5.1 Bearing internal clearance

Bearing internal clearance(initial clearance)is the amount of internal clearance a bearing has before being installed on a shaft or in a housing.

As shown in Fig. 5.1, when either the inner ring or the outer ring is fixed and the other ring is free to move, displacement can take place in either an axial or radial direction. This amount of displacement (radially or axially) is termed the internal clearance and, depending on the direction, is called the radial internal clearance or the axial internal clearance.

When the internal clearance of a bearing is measured, a slight measurement load is applied to the raceway so the internal clearance may be measured accurately. However, at this time, a slight amount of elastic deformation of the bearing occurs under the measurement load, and the clearance measurement value (measured clearance) is slightly larger than the true clearance. This discrepancy between the true bearing clearance and the increased amount due to the elastic deformation must be compensated for. These compensation values are given in Table 5.1.

The internal clearance values for each bearing class are shown in Tables 5.3.

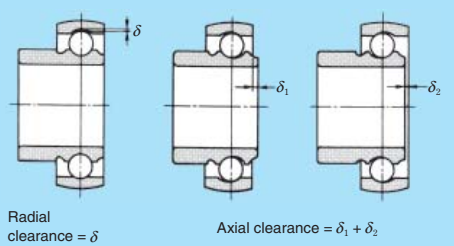

Fig.5.1 internal clearance

Table 5.1 Adjustment of radial internal clearance based on measured load

Unit μm

Nominal Bore Diameter d (mm)		Measuring Load (N)	Radial Clearance Increase				
over	incl.		C2	CN	C3	C4	C5
10	18	24.5	3 to 4	4	4	4	4
18	50	49	4 to 5	5	6	6	6
50	200	147	6 to 8	8	9	9	9

5.2 Internal clearance selection

The internal clearance of a bearing under operating conditions (effective clearance) is usually smaller than the same bearing's initial clearance before being installed and operated. This is due to several factors including bearing fit, the difference in temperature between the inner and outer rings, etc. As a bearing's operating clearance has an effect on bearing life, heat generation, vibration, noise, etc.; care must be taken in selecting the most suitable operating clearance.

Effective internal clearance:

The internal clearance differential between the initial clearance and the operating (effective) clearance (the amount of clearance reduction caused by interference fits, or clearance variation due to the temperature difference between the inner and outer rings) can be calculated by the following formula:

$$\delta_{eff} = \delta_o - (\delta_f + \delta_t) \quad \cdots\cdots (5.1)$$

where,

δ_{eff} : Effective internal clearance, mm

δ_o : Bearing internal clearance, mm

δ_f : Reduced amount of clearance due to interference, mm

δ_t : Reduced amount of clearance due to temperature differential of inner and outer rings, mm

Reduced clearance due to interference:

When bearings are installed with interference fits on shafts and in housings, the inner ring will expand and the outer ring will contract; thus reducing the bearings' internal clearance. The amount of expansion or contraction varies depending on the shape of the bearing, the shape of the shaft or housing, dimensions of the respective parts, and the type of materials used. The differential can range from approximately 70% to 90% of the effective interference.

$$\delta_f = (0.70 \text{ to } 0.90) \cdot \Delta d_{eff} \quad \cdots\cdots (5.2)$$

where,

δ_f : Reduced amount of clearance due to interference,mm

Δd_{eff} : Effective interference,mm

Reduced internal clearance due to inner/outer ring temperature difference:

During operation, normally the outer ring will be from 5° to 10°C cooler than the inner ring or rotating parts. However,if the cooling effect of the housing is large, the shaft is connected to a heat source, or a heated substance is conducted through the hollow shaft; the temperature difference between the two rings can be ever greater. The amount of internal clearance is thus further reduced by the differential expansion of the two rings.

$$\delta_t = \alpha \cdot \Delta_T \cdot D_o \quad \cdots\cdots (5.3)$$

where,

δ_t : Amount of reduced clearance due to heat differential, mm

α : Bearing steel linear expansion coefficient 12.5× 10^{-6}/°C

Δ_T : Inner/outer ring temperature differential,°C

D_o : Outer ring raceway diameter,mm

Outer ring raceway diameter, D_o, values can be approximated by using formula 5.4.

For ball bearings,

$$D_o = 0.20(d+4.0D) \quad \cdots\cdots (5.4)$$

where,

d : Bearing bore diameter, mm

D : Bearing outside diameter, mm

5.3 Bearing internal clearance selection standards

Theoretically, in regard to bearing life, the optimum operating internal clearance for any bearing would be a slight negative clearance after the bearing had reached normal operating temperature.

Unfortunately, under actual operating conditions, maintaining such optimum tolerances is often difficult at best. Due to various fluctuating operating conditions this slight minus clearance can quickly become a large minus, greatly lowering the life of the bearing and causing excessive heat to be generated. Therefore, an initial internal clearance which will result in a slightly greater than negative internal operating clearance should be selected.

Under normal operating conditions (e.g. normal load, fit, speed, temperature, etc.), a standard internal clearance will give a very satisfactory operating clearance.

Table 5.2 lists non-standard clearance recommendations for various applications and operating conditions.

Table 5.2 Examples of applications where bearing clearances other than normal clearance are used

Operating conditions	Appilcations	Selected clearance
Shaft is heated and housing is cooled.	Conveyor of casting machine	C5
Shaft or inner ring is heated.	Annealing pit,Drying pit,Curing pit	C4
Allows for shaft deflection and fitting errors.	Disc harrows	C4
	Combines	C3
Tight-fitted for both inner and outer rings.	Large blowers	C3
To reduce noise and vibration when rotating.	Multi-wing fan of air conditioners	C2

Table 5.3(1)Cylindrical bore bearings Unit: μm/0.0001 inch

Nominal bore diameter d				Radial internal clearance															
				C2				CN				C3				C4			
over mm	over inch	incl. mm	incl. inch	min.		max.		min.		max.		min.		max.		min.		max.	
10	0.3937	18	0.7087	0	0	9	4	3	1	18	7	11	4	25	10	18	7	33	13
18	0.7087	24	0.9449	0	0	10	4	5	2	20	8	13	5	28	11	20	8	36	14
24	0.9449	30	1.1811	1	0	11	4	5	2	20	8	13	5	28	11	23	9	41	16
30	1.1811	40	1.5748	1	0	11	4	6	2	20	8	15	6	33	13	28	11	46	18
40	1.5748	50	1.9685	1	0	11	4	6	2	23	9	18	7	36	14	30	12	51	20
50	1.9685	65	2.5591	1	0	15	6	8	3	28	11	23	9	43	17	38	15	61	24
65	2.5591	80	3.1496	1	0	15	6	10	4	30	12	25	10	51	20	46	18	71	28
80	3.1496	100	3.9370	1	0	18	7	12	5	36	14	30	12	58	23	53	21	84	33
100	3.9370	120	4.7244	2	1	20	8	15	6	41	16	36	14	66	26	61	24	97	38
120	4.7244	140	5.5118	2	1	23	9	18	7	48	19	41	16	81	32	71	28	114	45

Remarks Heat-resistant bearings with suffix HT2 have C4 clearances.

Table 5.3(2)Tapered bore bearings Unit: μm/0.0001 inch

Nominal bore diameter d				Radial internal clearance															
				C2				CN				C3				C4			
over mm	over inch	incl. mm	incl. inch	min.		max.		min.		max.		min.		max.		min.		max.	
24	0.9449	30	1.1811	5	2	20	8	13	5	28	11	23	9	41	16	30	12	53	21
30	1.1811	40	1.5748	6	2	20	8	15	6	33	13	28	11	46	18	40	16	64	25
40	1.5748	50	1.9685	6	2	23	9	18	7	36	14	30	12	51	20	45	18	73	29
50	1.9685	65	2.5591	8	3	28	11	23	9	43	17	38	15	61	24	55	22	90	35
65	2.5591	80	3.1496	10	4	30	12	25	10	51	20	46	18	71	28	65	26	105	41
80	3.1496	100	3.9370	12	5	36	14	30	12	58	23	53	21	84	33	75	30	120	47
100	3.9370	120	4.7244	15	6	41	16	36	14	66	26	61	24	97	38	90	35	140	55
120	4.7244	140	5.5118	18	7	48	19	41	16	81	32	71	28	114	45	105	41	160	63

6.Lubrication

As bearings in **NSK** bearing units have sufficient high-grade grease sealed in at the time of manufacture, there is no need for replenishment while in use. The amount of grease necessary for lubrication is, in general, very small. With the **NSK** bearing units, the amount of grease occupies about a half to a third of the space inside the bearing.

6.1 Maximum permissible speed of rotation

The maximum speed possible while ensuring the safety and long life of ball bearings used in the unit is limited by their size, the circumferential speed at the point where the seal comes into contact, and the load acting on them.

To indicate the maximum speed permissible, it is customary to use the value of dn or $d_m n$(d is the bore of the bearing; d_m is the diameter of the pitch circle=(I. D.+O.D.) /2; n is the number of revolutions).

Problem connected with the lubrication of bearings are the generation of heat and seizures occurring at the sliding parts inside the bearing, in particular at the points where the ball is in contact with the retainer, inner and outer rings. The contact pressure at the points where friction occurs on the retainer is only slightly affected by the load acting on the bearing; the amount of heat generated there is approximately in proportion to the sliding velocity. Therefore, this sliding velocity serves as a yardstick to measure the limit of the rotating speed of the bearing. In the case of a bearing unit, however, there is another large factor that has to be taken into account— the circumferential speed at the part where the seal is in contact.

The graph in Fig.6.1 indicates the maximum speed of rotation permissible, talking into account the aforementioned factors.

There are two common methods of locking the bearing unit onto the shaft— the set screw system and the eccentric collar system. However, in both of these systems high-speed operation will cause deformation of the inner ring, which may result in vibration of the bearing. For high-speed operation, therefore, it is recommended that an interference fit or a clearance fit with a near-zero clearance be used.

For standard bearing units with the contact type seal, the maximum speed permissible is 120 000/d. Where a higher speed is required, bearing units with the non-contact type seal, are advised. Please contact **NSK** regarding the use of the latter type. Additionally, it is necessary that the surface on which the housing is mounted be finished to as a high a degree of accuracy as possible. A regularity of within ±0.05mm, ±0.002inch is required.

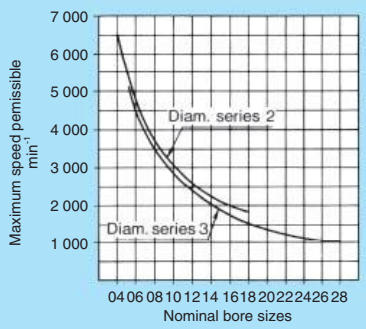

Fig. 6.1

6.2 Replenishment of grease

6.2.1 Sealed-in grease

With **NSK** bearing units, no relubrication is the general rule. The standard self-lubricating type of bearing units contain high-grade lithium-based grease which, being suitable for long-term use, is ideal for sealed-type bearings. Relubrication, therefore, is unnecessary under most operating conditions.

At high temperatures, or where there is exposure to: water or excessive dust, the highest quality grease is essential. Therefore. **NSK** uses its own specially selected brands which are shown in Table 6.1. It is necessary to use the same brand when replenishing grease.

Table 6.1 Brands of grease used in NSK bearing units

Bearing units	Grease			Symbols	Operating temperature range °C,°F
	Name of grease	Thickening agent	Base oil		
Standard	Alvania grease S3	Li soap	Mineral oil	D1	-10°to +100°C,(+14°to +212°F).
Heat-resistant	SH44MT	Li soap	Silicone oil	HT2D1	Nomal temp.to + 130°C(266°F).
Cold-resistant	SH33L	Li soap	Silicone oil	CT1D1	-60°C(-76°F)to nomal temp.

6.2.2 Mixing of different kinds of grease

Whether or not different kinds of grease may be mixed usually depends on their thickeners. The commonly used criteria are shown in Table 6.2. Properties which are most susceptible to influences from mixing are viscosity, dropping point and penetration. Water and heat resisting properties as well as mechanical stability are also lowered. Therefore, when mixing in a grease which is different to that which is already in use, it is essential that the thickener (soap base) and the base oil be of the same group.

When relubricating **NSK** bearing units, it is advisable to use the brands of grease shown in Table 6.1

Table 6.2 Mixing properties of grease

Soap base	Ca	Na	Al	Ba	Li
Ca	○	△	△	×	△
Na	△	○	△	×	×
Al	△	△	○	×	×
Ba	×	×	×	○	×
Li	△	×	×	×	○

○ Mixing will not produce any appreciable change of properties.
△ Mixing may produce considerable variations of properties.
× Mixing will cause a drastic change of properties.

6.2.3 Relubrication frequency

Relubrication frequency varies with the kind and quality of grease used as well as the operating conditions. Therefore, it is difficult to establish a general rule, but under ordinary operating conditions, it is desirable that grease be replenished before one third (1/3) of its calculated life elapses. It is necessary, however, to take into consideration such factors as hardening of grease in the oil hole, making replenishment impossible; deterioration of grease while operation of the machine is suspended, and so forth.

In Table 6.3 below are shown standard relubrication frequencies. Irrespective of the calculated life of the grease, this list takes into consideration such factors as the rotational speed of the bearings, operating temperatures and environmental conditions, with a view to safety.

6.2.4 Re-greasing

The performance of a bearing is greatly influenced by the quantity of grease. In order to avoid over-filling, it is advisable to replenish the grease while the machine is in operation.

Continue to insert grease until a little oozes out from between the outer ring raceway and the periphery of the slinger, for optimum performance.

Table 6.3 Standard relubrication frequencies

Type of unit	Symbol	*dn* Value	Environmental conditions	Operating temp. °C, °F	Relubrication frequency	
					Hours	Period
Standard	D1	40 000 and below	Ordinary	−10 to +80, +14 to +176	1 500 to 3 000	6 to 12 mo.
Standard	D1	70 000 and below	Ordinary	−10 to +80, +14 to +176	1 000 to 2 000	3 to 6 mo.
Standard	D1	70 000 and below	Ordinary	+80 to +100, +176 to +212	500 to 700	1 mo.
Heat-resistant	HT2D1	70 000 and below	Ordinary	+100 to +130, +212 to +266	300 to 700	1 mo.
Cold-resistant	CT1D1	70 000 and below	Ordinary	−60 to +80, −76 to +176	1 000 to 2 000	3 to 6 mo.
Standard	D1	70 000 and below	Very dusty	−10 to +100, +14 to +212	100 to 500	1 wk.to 1 mo.
Standard	D1	70 000 and below	Exposed to water splashes	−10 to +100, +14 to +212	30 to 100	1 day to 1 wk.

6.3 Grease fitting

NSK bearing units are, as a general rule, provided with a grease fitting, as shown in Table 6.4, and a grease gun is used for regreasing. However, button-head and pin types may also be furnished on demand.

Grease fitting dimensions and the designation of applicable bearing units are given in Table 6.5.

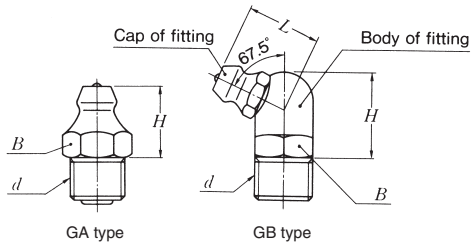

Table 6.4 Grease fitting types available for bearing units.

Types of housing	Standard grease fitting types
Pillow type	GA type
Flange type	GA type
Take-up type	GB type
Hanger type	GA type
Cartridge type	GA type

Table 6.5 Grease fitting dimensions and designations of applicable bearing units

GA type(Vertical type)

Designation	*d*	*H*		*B*	
		mm	inch	mm	inch
GA-¼-28 UNF	¼-28 UNF	8.5	0.335	7	0.276
GA-PF⅛	G⅛	12	0.472	10	0.394
GA-PF¼	G¼	14	0.551	14	0.551

GB type(67.5°)

Designation	*d*	*H*		*L*		*B*	
		mm	inch	mm	inch	mm	inch
GB-¼-28UNF	¼-28 UNF	10.5	0.413	9.3	0.366	8	0.315
GB-PF⅛	G⅛	14.2	0.559	13.5	0.531	10	0.394
GB-PF¼	G¼	15	0.591	13.5	0.531	14	0.551

Nominal screw size *d*	Series 2	Series X	Series 3
¼-28 UNF	203 - 209	X05 - X08	305 - 309
G⅛	210 - 215	X09 - X14	310 - 315
G¼	216 - 218	X15 - X20	316 - 328

Remarks Screw size for the cartridge type is ¼-28 UNF.
That for C310D1 to C328D1 is G⅛(PF⅛).

6.4 standard location of the grease fitting

Standard location of grease fitting on the housing for the relubricatable bearing units of each type is illustrated below.

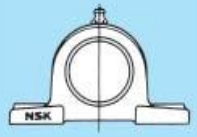	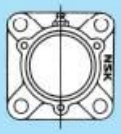	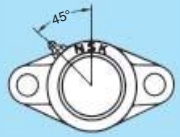	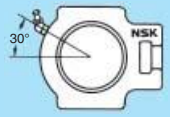
P, PL, Z-P, type	C-F type	FL, FLU, Z-FL type	T, Z-T type
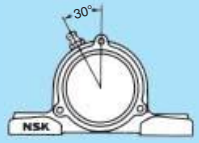	F, FU, Z-F (#204, #205)	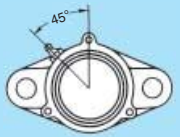	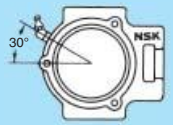
C-P type	FS type	C-FL type	C-T type
			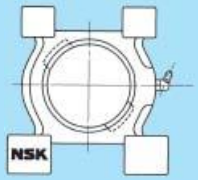
HP type	C-FS type	FH type	M, L, Z-M, Z-L type
		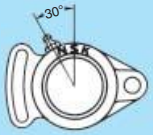	
UP type	FC, Z-FC type	FA type	C-M, C-L type
Except (#204, #205)			
F, FU, Z-F type	C-FC type	HB type	C type

7. Recommended Torques for Tigtening Set Screws

Table 7.1 Recommended torques for tightening set screws

A)Metric series,applied to metric bore size.

Designation of the bearings of applicable units			Designation of set screws	Tightening torques N·m(max.)
UC201 to UC205	—	—	M 5×0.8 × 7	3.9
UC206	—	UC305 to UC306	M 6×0.75 × 8	4.9
UC207	UCX05	—	M 6×0.75 × 8	5.8
UC208 to UC210	—	—	M 8×1 ×10	7.8
UC211	UCX06 to UCX08	UC307	M 8×1 ×10	9.8
UC212	UCX09	—	M10×1.25 ×12	16.6
UC213 to UC215	—	UC308 to UC309	M10×1.25 ×12	19.6
UC216	UCX10	—	M10×1.25 ×12	22.5
—	UCX11 to UCX12	—	M10×1.25 ×12	24.5
UC217 to UC218	UCX13 to UCX15	UC310 to UC314	M12×1.5 ×13	29.4
—	UCX16 to UCX17	—	M12×1.5 ×13	34.3
—	UCX18	UC315 to UC316	M14×1.5 ×15	34.3
—	UCX20	UC317 to UC319	M16×1.5 ×18	53.9
—	—	UC320 to UC324	M18×1.5 ×20	58.8
—	—	UC326 to UC328	M20×1.5 ×25	78.4

B)Inch series,applied to inch bore size.

Designation of the bearings for the unit to which torques given are applicable			Designation of set screws	Tightening torques lbf·inch(max.)
UC201 to UC205	—	—	No.10-32UNF	34
UC206	—	UC305 to UC306	1/4-28UNF	43
UC207	UCX05	—	1/4-28UNF	52
UC208 to UC210	—	—	5/16-24UNF	69
UC211	UCX06 to UCX08	UC307	5/16-24UNF	86
UC212	UCX09	—	3/8-24UNF	147
UC213 to UC215	—	UC308 to UC309	3/8-24UNF	173
UC216	UCX10	—	3/8-24UNF	199
—	UCX11 to UCX12	—	3/8-24UNF	216
UC217 to UC218	UCX13 to UCX15	UC310 to UC314	1/2-20UNF	260
—	UCX16 to UCX17	—	1/2-20UNF	303
—	UCX18	UC315 to UC316	9/16-18UNF	303
—	UCX20	UC317 to UC319	5/8-18UNF	477
—	—	UC320	5/8-18UNF	520

Designation of the bearings of applicable units	Designation of set screws	Tightening torques N·m(max.)
AS201 to 205	M 5×0.8 × 7	3.4
AS206	M 6×0.75 × 8	4.4
AS207	M 6×0.75 × 8	4.9
AS208	M 8×1 ×10	6.8

Designation of the bearings for the unit to which torques given are applicable	Designation of set screws	Tightening torques lbf·inch(max.)
AS201 to 205	No.10-32UNF	30
AS206	1/4-28UNF	39
AS207	1/4-28UNF	43
AS208	5/16-24UNF	60

Contents of ball bearing units and ball bearings for bearing units

DIMENSION TABLE

Pages

Set screw type

Pillow block unit, cast housing
- **UCP2** B4
- **UCP3** B10
- **UCPX** B16
- **UCPL2** B22
- **UCHP2** B26
- **UCUP2** B30
- **ASPL2** B34

Pillow block unit, pressed steel housing
- **ASPP2** B38
- **ASRPP2** B40

Square flanged unit, cast housing
- **UCF2** B42
- **UCF3** B48
- **UCFX** B54
- **UCFS3** B60

Round flanged unit, cast housing
- **UCFC2** B66
- **UCFCX** B72

Rhombus flanged unit, cast housing
- **UCFL2** B78
- **UCFL3** B84
- **UCFLX** B90
- **UCFA2** B92
- **UCFH2** B96
- **ASFB2** B100
- **ASFD2** B102

Round flanged unit, pressed steel housing
- **ASPF2** B104
- **ASRPF2** B106

Rhombus flanged unit, pressed steel housing
- **ASPFL2** B108

Hanger unit, cast housing
- **UCHB2** B110

Pages

Take-up unit, cast housing
- **UCT2** B114
- **UCT3** B120
- **UCTX** B126

Take-up stretcher units
- **UCT2-** B130

Take-up type L stretcher units
- **UCL2-** B132

Take-up type M stretcher units
- **UCM2-** B134
- **UCM3-** B136

Take-up mini stretcher units
- **ASPT2-** B138

Cartridge unit, cast housing
- **UCC2** B140
- **UCC3** B142
- **UCCX** B146

Eccentric locking collar type

Pillow block unit, cast housing
- **UELP2** B148
- **UELP3** B152
- **UELPL2** B158
- **UELHP2** B162
- **UELUP2** B164
- **AELPL2** B166
- **JELPL2** B168

Pillow block unit, pressed steel housing
- **AELPP2** B170
- **AELRPP2** B172

Square flanged unit, cast housing
- **UELF2** B174
- **UELF3** B178
- **UELFU2** B184
- **UELFS3** B188

Round flanged unit, cast housing
- **UELFC2** B194

Pages

Rhombus flanged unit, cast housing
- **UELFL2** B198
- **UELFL3** B202
- **UELFLU2** B208
- **AELFB2** B212
- **AELFD2** B214
- **JELFD2** B216

Round flanged unit, pressed steel housing
- **AELPF2** B218
- **JELPF2** B220
- **AELRPF2** B222

Rhombus flanged unit, pressed steel housing
- **AELPFL2** B224
- **JELPFL2** B226

Take-up unit, cast housing
- **UELT2** B228
- **UELT3** B232

Take-up mini stretcher units
- **AELPT2-** B238
- **JELPT2-** B240

Cartridge unit, cast housing
- **UELC2** B242
- **UELC3** B244

Adapter type

Pillow block unit, cast housing
- **UKP2** B248
- **UKP3** B252
- **UKPX** B256

Square flanged unit, cast housing
- **UKF2** B260
- **UKF3** B264
- **UKFX** B268
- **UKFS3** B272

Round flanged unit, cast housing
- **UKFC2** B276
- **UKFCX** B280

Pages

Rhombus flanged unit, cast housing
- **UKFL2** B284
- **UKFL3** B288
- **UKFLX** B292

Take-up unit, cast housing
- **UKT2** B294
- **UKT3** B298
- **UKTX** B302

Cartridge unit, cast housing
- **UKC2** B306
- **UKC3** B308
- **UKCX** B310

Ball bearings

Set screw type
- **UC2** B312
- **UC3** B318
- **UCX** B324
- **AS2** B328
- **AR2** B332

Eccentric locking collar type
- **UEL2** B336
- **UEL3** B340
- **AEL2** B346
- **JEL2** B348
- **REL2** B350

Adapter type
- **UK2** B354
- **UK3** B358
- **UKX** B362

Other bearings
- **UCS2** B366
- **UCS3** B370
- **ASS2** B374
- **UELS2** B376
- **UELS3** B380
- **AELS2** B384
- **JELS2** B386
- **CS2** B388

Pillow block unit, cast housing
Set screw type

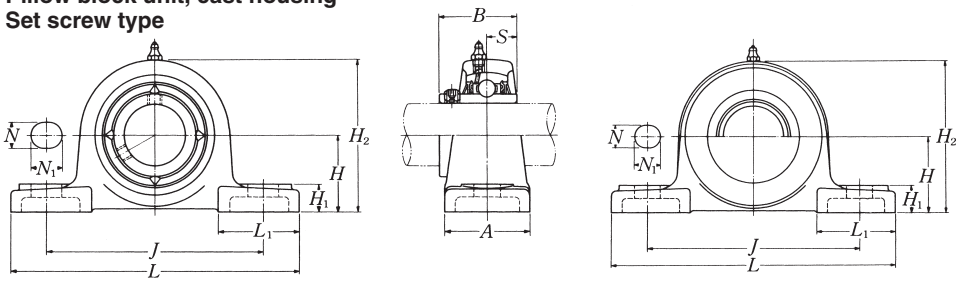

Pressed steel dust cover type
Open end **Z-UCP···D1**
Closed end **ZM-UCP···D1**

Shaft dia. mm / inch	Unit number (1)	Nominal dimensions mm / inch H	L	J	A	N	N_1	H_1	H_2	L_1	B	S	Bolt size mm / inch	Bearing number
12	UCP201D1	30.2	127	95	38	13	16	14	62	42	31	12.7	M10	UC201D1
1/2	UCP201-008D1	1 3/16	5	3 3/4	1 1/2	1/2	5/8	9/16	2 7/16	1 21/32	1.2205	0.500	3/8	UC201-008D1
15	UCP202D1	30.2	127	95	38	13	16	14	62	42	31	12.7	M10	UC202D1
9/16	UCP202-009D1	1 3/16	5	3 3/4	1 1/2	1/2	5/8	9/16	2 7/16	1 21/32	1.2205	0.500	3/8	UC202-009D1
5/8	UCP202-010D1													UC202-010D1
17	UCP203D1	30.2	127	95	38	13	16	14	62	42	31	12.7	M10	UC203D1
11/16	UCP203-011D1	1 3/16	5	3 3/4	1 1/2	1/2	5/8	9/16	2 7/16	1 21/32	1.2205	0.500	3/8	UC203-011D1
20	UCP204D1	33.3	127	95	38	13	16	14	65	42	31	12.7	M10	UC204D1
3/4	UCP204-012D1	1 5/16	5	3 3/4	1 1/2	1/2	5/8	9/16	2 9/16	1 21/32	1.2205	0.500	3/8	UC204-012D1
25	UCP205D1	36.5	140	105	38	13	16	15	71	42	34.1	14.3	M10	UC205D1
13/16	UCP205-013D1													UC205-013D1
7/8	UCP205-014D1	1 7/16	5 1/2	4 1/8	1 1/2	1/2	5/8	19/32	2 25/32	1 21/32	1.3425	0.563	3/8	UC205-014D1
15/16	UCP205-015D1													UC205-015D1
1	UCP205-100D1													UC205-100D1
30	UCP206D1	42.9	165	121	48	17	20	17	83	54	38.1	15.9	M14	UC206D1
1 1/16	UCP206-101D1													UC206-101D1
1 1/8	UCP206-102D1	1 11/16	6 1/2	4 3/4	1 7/8	21/32	25/32	21/32	3 9/32	2 1/8	1.5000	0.626	1/2	UC206-102D1
1 3/16	UCP206-103D1													UC206-103D1
1 1/4	UCP206-104D1													UC206-104D1
35	UCP207D1	47.6	167	127	48	17	20	18	93	54	42.9	17.5	M14	UC207D1
1 1/4	UCP207-104D1													UC207-104D1
1 5/16	UCP207-105D1	1 7/8	6 9/16	5	1 7/8	21/32	25/32	23/32	3 21/32	2 1/8	1.6890	0.689	1/2	UC207-105D1
1 3/8	UCP207-106D1													UC207-106D1
1 7/16	UCP207-107D1													UC207-107D1
40	UCP208D1	49.2	184	137	54	17	20	18	98	52	49.2	19	M14	UC208D1
1 1/2	UCP208-108D1	1 15/16	7 1/4	5 13/32	2 1/8	21/32	25/32	23/32	3 27/32	2 1/16	1.9370	0.748	1/2	UC208-108D1
1 9/16	UCP208-109D1													UC208-109D1
45	UCP209D1	54	190	146	54	17	20	20	106	60	49.2	19	M14	UC209D1
1 5/8	UCP209-110D1													UC209-110D1
1 11/16	UCP209-111D1	2 1/8	7 15/32	5 3/4	2 1/8	21/32	25/32	25/32	4 3/16	2 3/8	1.9370	0.748	1/2	UC209-111D1
1 3/4	UCP209-112D1													UC209-112D1

Note (1) These numbers indicate relubricatable type. If maintenance free type is needed, please order without suffix "D1".
Remarks Please refer to page **A21** for size of grease fitting.

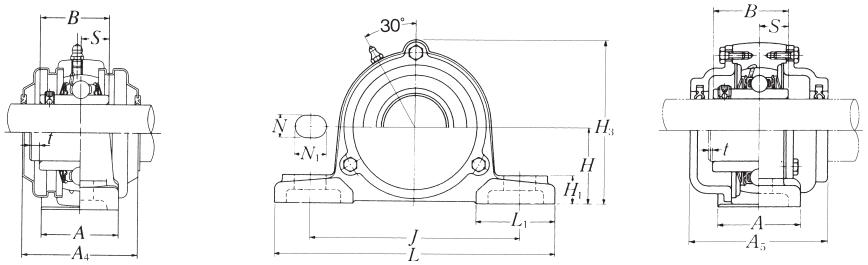

Cast dust cover type
Open end **C-UCP···D1**
Closed end **CM-UCP···D1**

Housing number	Unit number (1) pressed steel dust cover type	Unit number (1) cast dust cover type	Nominal dimensions mm / inch t max.	A_4	H_3	A_5	Mass of unit kg / lb UCP	Z(ZM)	C(CM)
P203D1	Z(ZM)-UCP201D1	C(CM)-UCP201D1	2	45	67	62	0.7	0.7	1.0
P203D1	Z(ZM)-UCP201-008D1	C(CM)-UCP201-008D1	5/64	1 25/32	2 5/8	2 7/16	1.5	1.5	2.2
P203D1	Z(ZM)-UCP202D1	C(CM)-UCP202D1	2	45	67	62	0.7	0.7	1.0
P203D1	Z(ZM)-UCP202-009D1	C(CM)-UCP202-009D1	5/64	1 25/32	2 5/8	2 7/16	1.5	1.5	2.2
P203D1	Z(ZM)-UCP202-010D1	C(CM)-UCP202-010D1							
P203D1	Z(ZM)-UCP203D1	C(CM)-UCP203D1	2	45	67	62	0.7	0.7	1.0
P203D1	Z(ZM)-UCP203-011D1	C(CM)-UCP203-011D1	5/64	1 25/32	2 5/8	2 7/16	1.5	1.5	2.2
P204D1	Z(ZM)-UCP204D1	C(CM)-UCP204D1	2	45	70	62	0.7	0.7	0.9
P204D1	Z(ZM)-UCP204-012D1	C(CM)-UCP204-012D1	5/64	1 25/32	2 3/4	2 7/16	1.5	1.5	2.0
P205D1	Z(ZM)-UCP205D1	C(CM)-UCP205D1	2	48	76	70	0.8	0.9	1.1
P205D1	Z(ZM)-UCP205-013D1	C(CM)-UCP205-013D1							
P205D1	Z(ZM)-UCP205-014D1	C(CM)-UCP205-014D1	5/64	1 29/32	3	2 3/4	1.8	2.0	2.4
P205D1	Z(ZM)-UCP205-015D1	C(CM)-UCP205-015D1							
P205D1	Z(ZM)-UCP205-100D1	C(CM)-UCP205-100D1							
P206D1	Z(ZM)-UCP206D1	C(CM)-UCP206D1	2	53	88	75	1.4	1.4	1.7
P206D1	Z(ZM)-UCP206-101D1	C(CM)-UCP206-101D1							
P206D1	Z(ZM)-UCP206-102D1	C(CM)-UCP206-102D1	5/64	2 3/32	3 15/32	2 15/16	3.1	3.1	3.7
P206D1	Z(ZM)-UCP206-103D1	C(CM)-UCP206-103D1							
P206D1	—	—							
P207D1	Z(ZM)-UCP207D1	C(CM)-UCP207D1	3	60	99	80	1.6	1.7	2.0
P207D1	Z(ZM)-UCP207-104D1	C(CM)-UCP207-104D1							
P207D1	Z(ZM)-UCP207-105D1	C(CM)-UCP207-105D1	1/8	2 3/8	3 29/32	3 5/32	3.5	3.7	4.4
P207D1	Z(ZM)-UCP207-106D1	C(CM)-UCP207-106D1							
P207D1	—	—							
P208D1	Z(ZM)-UCP208D1	C(CM)-UCP208D1	3	69	105	90	1.9	2.1	2.7
P208D1	Z(ZM)-UCP208-108D1	C(CM)-UCP208-108D1	1/8	2 23/32	4 1/8	3 17/32	4.2	4.6	6.0
P208D1	Z(ZM)-UCP208-109D1	C(CM)-UCP208-109D1							
P209D1	Z(ZM)-UCP209D1	C(CM)-UCP209D1	3	69	113	95	2.2	2.4	3.1
P209D1	Z(ZM)-UCP209-110D1	C(CM)-UCP209-110D1							
P209D1	Z(ZM)-UCP209-111D1	C(CM)-UCP209-111D1	1/8	2 23/32	4 7/16	3 3/4	4.9	5.3	6.8
P209D1	Z(ZM)-UCP209-112D1	C(CM)-UCP209-112D1							

Pillow block unit, cast housing
Set screw type

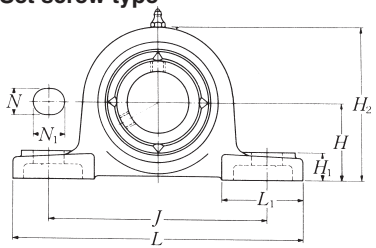

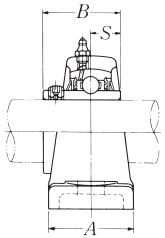

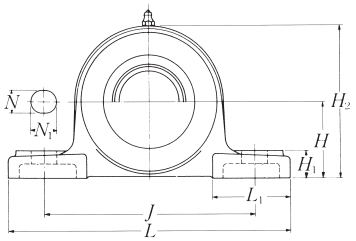

Pressed steel dust cover type
Open end **Z-UCP···D1**
Closed end **ZM-UCP···D1**

Shaft dia. mm / inch	Unit number (1)	Nominal dimensions mm / inch H	L	J	A	N	N_1	H_1	H_2	L_1	B	S	Bolt size mm / inch	Bearing number
50	UCP210D1	57.2	206	159	60	20	23	21	114	65	51.6	19	M16	UC210D1
1 13/16	UCP210-113D1													UC210-113D1
1 7/8	UCP210-114D1	2 1/4	8 1/8	6 1/4	2 3/8	25/32	29/32	13/16	4 1/2	2 9/16	2.0315	0.748	5/8	UC210-114D1
1 15/16	UCP210-115D1													UC210-115D1
2	UCP210-200D1													UC210-200D1
55	UCP211D1	63.5	219	171	60	20	23	23	126	65	55.6	22.2	M16	UC211D1
2	UCP211-200D1													UC211-200D1
2 1/16	UCP211-201D1	2 1/2	8 5/8	6 23/32	2 3/8	25/32	29/32	29/32	4 31/32	2 9/16	2.1890	0.874	5/8	UC211-201D1
2 1/8	UCP211-202D1													UC211-202D1
2 3/16	UCP211-203D1													UC211-203D1
60	UCP212D1	69.8	241	184	70	20	23	25	138	70	65.1	25.4	M16	UC212D1
2 1/4	UCP212-204D1													UC212-204D1
2 5/16	UCP212-205D1	2 3/4	9 1/2	7 1/4	2 3/4	25/32	29/32	31/32	5 7/16	2 3/4	2.5630	1.000	5/8	UC212-205D1
2 3/8	UCP212-206D1													UC212-206D1
2 7/16	UCP212-207D1													UC212-207D1
65	UCP213D1	76.2	265	203	70	25	28	27	151	77	65.1	25.4	M20	UC213D1
2 1/2	UCP213-208D1													UC213-208D1
2 9/16	UCP213-209D1	3	10 7/16	8	2 3/4	31/32	1 3/32	1 1/16	5 15/16	3 1/32	2.5630	1.000	3/4	UC213-209D1
70	UCP214D1	79.4	266	210	72	25	28	27	157	77	74.6	30.2	M20	UC214D1
2 5/8	UCP214-210D1													UC214-210D1
2 11/16	UCP214-211D1	3 1/8	10 15/32	8 9/32	2 27/32	31/32	1 3/32	1 1/16	6 3/16	3 1/32	2.9370	1.189	3/4	UC214-211D1
2 3/4	UCP214-212D1													UC214-212D1
75	UCP215D1	82.6	275	217	74	25	28	28	163	80	77.8	33.3	M20	UC215D1
2 13/16	UCP215-213D1													UC215-213D1
2 7/8	UCP215-214D1	3 1/4	10 13/16	8 17/32	2 29/32	31/32	1 3/32	1 3/32	6 13/32	3 5/32	3.0630	1.311	3/4	UC215-214D1
2 15/16	UCP215-215D1													UC215-215D1
3	UCP215-300D1													UC215-300D1
80	UCP216D1	88.9	292	232	78	25	28	30	175	85	82.6	33.3	M20	UC216D1
3 1/16	UCP216-301D1													UC216-301D1
3 1/8	UCP216-302D1	3 1/2	11 1/2	9 1/8	3 1/16	31/32	1 3/32	1 3/16	6 7/8	3 11/32	3.2520	1.311	3/4	UC216-302D1
3 3/16	UCP216-303D1													UC216-303D1

Note (1) These numbers indicate relubricatable type. If maintenance free type is needed, please order without suffix "D1".
Remarks Please refer to page **A21** for size of grease fitting.

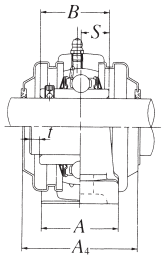

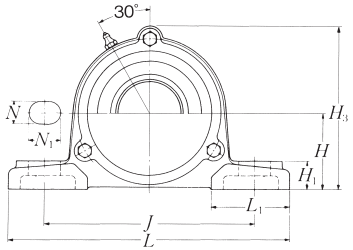

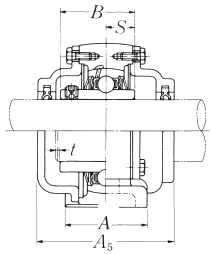

Cast dust cover type
Open end **C-UCP···D1**
Closed end **CM-UCP···D1**

Housing number	Unit number (1) pressed steel dust cover type	Unit number (1) cast dust cover type	Nominal dimensions mm / inch t max.	A_4	H_3	A_5	Mass of unit kg / lb UCP	Z(ZM)	C(CM)
P210D1	Z(ZM)-UCP210D1	C(CM)-UCP210D1	3	76	119	100	2.7	2.8	3.6
P210D1	Z(ZM)-UCP210-113D1	C(CM)-UCP210-113D1							
P210D1	Z(ZM)-UCP210-114D1	C(CM)-UCP210-114D1	1/8	3	4 11/16	3 15/16	6.0	6.2	7.9
P210D1	Z(ZM)-UCP210-115D1	C(CM)-UCP210-115D1							
P210D1	–	C(CM)-UCP210-200D1							
P211D1	Z(ZM)-UCP211D1	C(CM)-UCP211D1	4	77	130	100	3.5	3.5	4.4
P211D1	Z(ZM)-UCP211-200D1	C(CM)-UCP211-200D1							
P211D1	Z(ZM)-UCP211-201D1	C(CM)-UCP211-201D1	5/32	3 1/32	5 1/8	3 15/16	7.7	7.7	9.7
P211D1	Z(ZM)-UCP211-202D1	C(CM)-UCP211-202D1							
P211D1	Z(ZM)-UCP211-203D1	C(CM)-UCP211-203D1							
P212D1	Z(ZM)-UCP212D1	C(CM)-UCP212D1	4	89	143	115	4.7	5.0	6.0
P212D1	Z(ZM)-UCP212-204D1	C(CM)-UCP212-204D1							
P212D1	Z(ZM)-UCP212-205D1	C(CM)-UCP212-205D1	5/32	3 1/2	5 5/8	4 17/32	10	11	13
P212D1	Z(ZM)-UCP212-206D1	C(CM)-UCP212-206D1							
P212D1	–	C(CM)-UCP212-207D1							
P213D1	Z(ZM)-UCP213D1	C(CM)-UCP213D1	4	91	155	120	5.6	5.8	7.2
P213D1	Z(ZM)-UCP213-208D1	C(CM)-UCP213-208D1	5/32	3 19/32	6 3/32	4 23/32	12	13	16
P213D1	Z(ZM)-UCP213-209D1	C(CM)-UCP213-209D1							
P214D1	–	C(CM)-UCP214D1	4	–	162	135	6.5	–	8.3
P214D1		C(CM)-UCP214-210D1							
P214D1	–	C(CM)-UCP214-211D1	5/32	–	6 3/8	5 5/16	14	–	18
P214D1		C(CM)-UCP214-212D1							
P215D1	–	C(CM)-UCP215D1	4	–	168	135	7.2	–	9.3
P215D1		C(CM)-UCP215-213D1							
P215D1	–	C(CM)-UCP215-214D1	5/32	–	6 5/8	5 5/16	16	–	21
P215D1		C(CM)-UCP215-215D1							
P215D1		C(CM)-UCP215-300D1							
P216D1	–	C(CM)-UCP216D1	4	–	181	145	8.7	–	11
P216D1		C(CM)-UCP216-301D1							
P216D1	–	C(CM)-UCP216-302D1	5/32	–	7 1/8	5 23/32	19	–	24
P216D1		C(CM)-UCP216-303D1							

Pillow block unit, cast housing
Set screw type

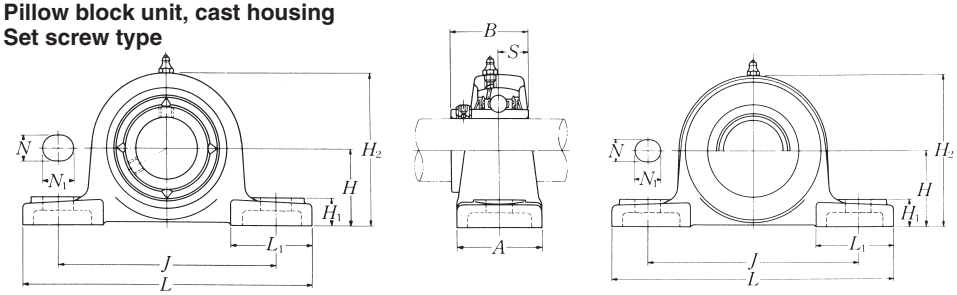

Pressed steel dust cover type
Open end **Z-UCP…D1**
Closed end **ZM-UCP…D1**

Shaft dia. mm / inch	Unit number (1)	Nominal dimensions mm / inch H	L	J	A	N	N_1	H_1	H_2	L_1	B	S	Bolt size mm / inch	Bearing number
85	**UCP217D1**	95.2	310	247	83	25	28	32	187	85	85.7	34.1	M20	UC217D1
3 1/4	**UCP217-304D1**													UC217-304D1
3 5/16	**UCP217-305D1**	3 3/4	12 7/32	9 23/32	3 9/32	31/32	1 3/32	1 1/4	7 3/8	3 11/32	3.3740	1.343	3/4	UC217-305D1
3 7/16	**UCP217-307D1**													UC217-307D1
90	**UCP218D1**	101.6	327	262	88	27	30	33	200	90	96	39.7	M22	UC218D1
3 1/2	**UCP218-308D1**	4	12 7/8	10 5/16	3 15/32	1 1/16	1 3/16	1 5/16	7 7/8	3 17/32	3.7795	1.563	7/8	UC218-308D1

Note (1) These numbers indicate relubricatable type. If maintenance free type is needed, please order without suffix "D1".
Remarks Please refer to page **A21** for size of grease fitting.

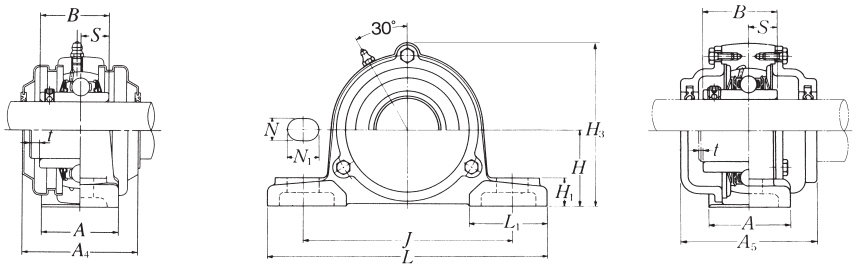

Cast dust cover type
Open end **C-UCP…D1**
Closed end **CM-UCP…D1**

Housing number	Unit number (1) pressed steel dust cover type	Unit number (1) cast dust cover type	Nominal dimensions mm / inch t max.	A_4	H_3	A_5	Mass of unit kg / lb UCP	Z(ZM)	C(CM)
P217D1	–	**C(CM)-UCP217D1**	5	–	191	155	11	–	13
P217D1		**C(CM)-UCP217-304D1**							
P217D1	–	**C(CM)-UCP217-305D1**	13/64	–	7 17/32	6 3/32	24	–	29
P217D1		**C(CM)-UCP217-307D1**							
P218D1	–	**C(CM)-UCP218D1**	5	–	204	165	13	–	16
P218D1	–	**C(CM) UCP218-308D1**	13/64	–	8 1/32	6 1/2	29	–	35

Pillow block unit, cast housing
Set screw type

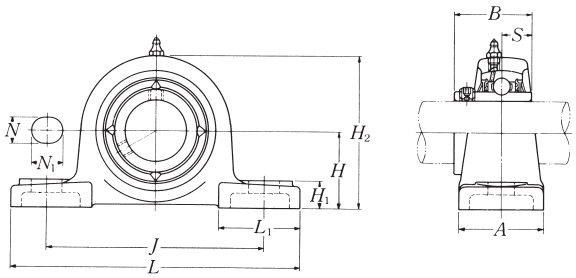

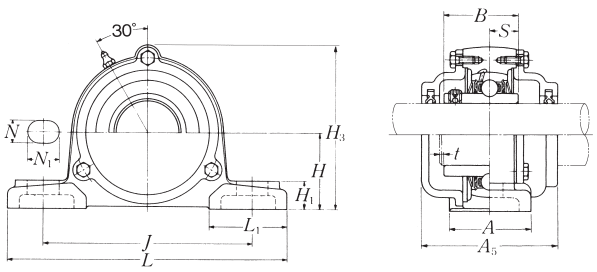

Cast dust cover type
Open end **C-UCP···D1**
Closed end **CM-UCP···D1**

Shaft dia. mm / inch	Unit number (1)	Nominal dimensions mm / inch H	L	J	A	N	N_1	H_1	H_2	L_1	B	S	Bolt size mm / inch
25	UCP305D1	45	175	132	45	17	20	15	85	54	38	15	M14
13/16	UCP305-013D1												
7/8	UCP305-014D1	1 49/64	6 7/8	5 3/16	1 25/32	21/32	25/32	19/32	3 11/32	2 1/8	1.4961	0.591	1/2
15/16	UCP305-015D1												
1	UCP305-100D1												
30	UCP306D1	50	180	140	50	17	20	18	95	54	43	17	M14
1 1/16	UCP306-101D1												
1 1/8	UCP306-102D1	1 31/32	7 3/32	5 1/2	1 31/32	21/32	25/32	23/32	3 3/4	2 1/8	1.6929	0.669	1/2
1 3/16	UCP306-103D1												
35	UCP307D1	56	210	160	56	17	25	20	106	60	48	19	M14
1 1/4	UCP307-104D1												
1 5/16	UCP307-105D1	2 13/64	8 9/32	6 5/16	2 7/32	21/32	31/32	25/32	4 3/16	2 3/8	1.8898	0.748	1/2
1 3/8	UCP307-106D1												
1 7/16	UCP307-107D1												
40	UCP308D1	60	220	170	60	17	27	22	116	60	52	19	M14
1 1/2	UCP308-108D1	2 23/64	8 21/32	6 11/16	2 3/8	21/32	1 1/16	7/8	4 9/16	2 3/8	2.0472	0.748	1/2
1 9/16	UCP308-109D1												
45	UCP309D1	67	245	190	67	20	30	24	129	65	57	22	M16
1 5/8	UCP309-110D1												
1 11/16	UCP309-111D1	2 41/64	9 21/32	7 15/32	2 5/8	25/32	1 3/16	15/16	5 3/32	2 9/16	2.2441	0.866	5/8
1 3/4	UCP309-112D1												
50	UCP310D1	75	275	212	75	20	35	27	143	75	61	22	M16
1 13/16	UCP310-113D1												
1 7/8	UCP310-114D1	2 61/64	10 13/16	8 11/32	2 15/16	25/32	1 3/8	1 1/16	5 5/8	2 15/16	2.4016	0.866	5/8
1 15/16	UCP310-115D1												
55	UCP311D1	80	310	236	80	20	38	30	154	85	66	25	M16
2	UCP311-200D1												
2 1/16	UCP311-201D1	3 5/32	12 7/32	9 9/32	3 5/32	25/32	1 1/2	1 3/16	6 1/16	3 11/32	2.5984	0.984	5/8
2 1/8	UCP311-202D1												
2 3/16	UCP311-203D1												

Note (1) These numbers indicate relubricatable type. If maintenance free type is needed, please order without suffix "D1".
Remarks Please refer to page **A21** for size of grease fitting.

Bearing number	Housing number	Unit number (1) cast dust cover type	Nominal dimensions mm / inch t max.	H_3	A_5	Mass of unit kg / lb UCP	C(CM)
UC305D1	P305D1	C(CM)-UCP305D1	2	91	80	1.4	1.8
UC305-013D1	P305D1	C(CM)-UCP305-013D1					
UC305-014D1	P305D1	C(CM)-UCP305-014D1	5/64	3 19/32	3 5/32	3.1	4.0
UC305-015D1	P305D1	C(CM)-UCP305-015D1					
UC305-100D1	P305D1	C(CM)-UCP305-100D1					
UC306D1	P306D1	C(CM)-UCP306D1	2	105	85	1.8	2.5
UC306-101D1	P306D1	C(CM)-UCP306-101D1					
UC306-102D1	P306D1	C(CM)-UCP306-102D1	5/64	4 1/8	3 11/32	4.0	5.5
UC306-103D1	P306D1	C(CM)-UCP306-103D1					
UC307D1	P307D1	C(CM)-UCP307D1	3	115	95	2.5	3.2
UC307-104D1	P307D1	C(CM)-UCP307-104D1					
UC307-105D1	P307D1	C(CM)-UCP307-105D1	1/8	4 17/32	3 3/4	5.5	7.1
UC307-106D1	P307D1	C(CM)-UCP307-106D1					
UC307-107D1	P307D1	C(CM)-UCP307-107D1					
UC308D1	P308D1	C(CM)-UCP308D1	3	125	105	3.1	4.0
UC308-108D1	P308D1	C(CM)-UCP308-108D1	1/8	4 29/32	4 1/8	6.8	8.8
UC308-109D1	P308D1	C(CM)-UCP308-109D1					
UC309D1	P309D1	C(CM)-UCP309D1	3	140	110	4.1	5.4
UC309-110D1	P309D1	C(CM)-UCP309-110D1					
UC309-111D1	P309D1	C(CM)-UCP309-111D1	1/8	5 1/2	4 11/32	9.0	12
UC309-112D1	P309D1	C(CM)-UCP309-112D1					
UC310D1	P310D1	C(CM)-UCP310D1	3	156	120	5.6	7.0
UC310-113D1	P310D1	C(CM)-UCP310-113D1					
UC310-114D1	P310D1	C(CM)-UCP310-114D1	1/8	6 5/32	4 23/32	12	15
UC310-115D1	P310D1	C(CM)-UCP310-115D1					
UC311D1	P311D1	C(CM)-UCP311D1	4	166	125	7.3	8.8
UC311-200D1	P311D1	C(CM)-UCP311-200D1					
UC311-201D1	P311D1	C(CM)-UCP311-201D1	5/32	6 17/32	4 29/32	16	19
UC311-202D1	P311D1	C(CM)-UCP311-202D1					
UC311-203D1	P311D1	C(CM)-UCP311-203D1					

Pillow block unit, cast housing
Set screw type

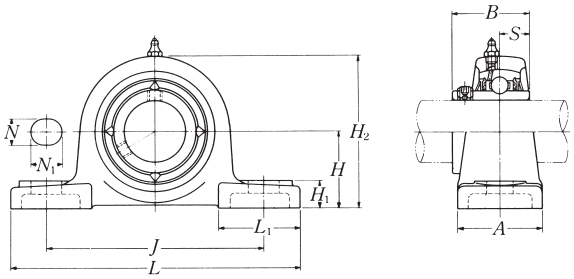

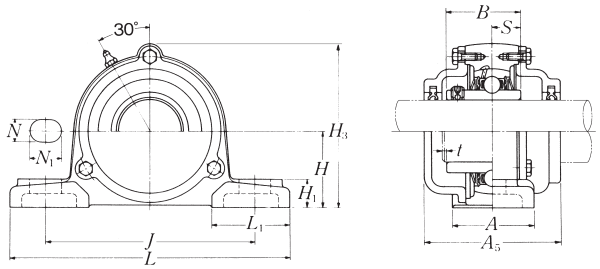

Cast dust cover type
Open end **C-UCP···D1**
Closed end **CM-UCP···D1**

Shaft dia. mm / inch	Unit number (1)	Nominal dimensions mm / inch H	L	J	A	N	N_1	H_1	H_2	L_1	B	S	Bolt size mm / inch
60	UCP312D1	85	330	250	85	25	38	32	165	95	71	26	M20
2 1/4	UCP312-204D1												
2 5/16	UCP312-205D1	3 11/32	13	9 27/32	3 11/32	31/32	1 1/2	1 1/4	6 1/2	3 3/4	2.7953	1.024	3/4
2 3/8	UCP312-206D1												
2 7/16	UCP312-207D1												
65	UCP313D1	90	340	260	90	25	38	33	176	105	75	30	M20
2 1/2	UCP313-208D1	3 35/64	13 3/8	10 1/4	3 17/32	31/32	1 1/2	1 5/16	6 15/16	4 1/8	2.9528	1.181	3/4
2 9/16	UCP313-209D1												
70	UCP314D1	95	360	280	90	27	40	35	187	105	78	33	M22
2 5/8	UCP314-210D1												
2 11/16	UCP314-211D1	3 47/64	14 3/16	11 1/32	3 17/32	1 1/16	1 9/16	1 3/8	7 3/8	4 1/8	3.0709	1.299	7/8
2 3/4	UCP314-212D1												
75	UCP315D1	100	380	290	100	27	40	35	198	110	82	32	M22
2 13/16	UCP315-213D1												
2 7/8	UCP315-214D1	3 15/16	14 31/32	11 13/32	3 15/16	1 1/16	1 9/16	1 3/8	7 25/32	4 11/32	3.2283	1.260	7/8
2 15/16	UCP315-215D1												
3	UCP315-300D1												
80	UCP316D1	106	400	300	110	27	40	40	210	110	86	34	M22
3 1/16	UCP316-301D1												
3 1/8	UCP316-302D1	4 11/64	15 3/4	11 13/16	4 11/32	1 1/16	1 9/16	1 9/16	8 9/32	4 11/32	3.3858	1.339	7/8
3 3/16	UCP316-303D1												
85	UCP317D1	112	420	320	110	33	45	40	220	120	96	40	M27
3 1/4	UCP317-304D1												
3 5/16	UCP317-305D1	4 13/32	16 17/32	12 19/32	4 11/32	1 5/16	1 25/32	1 9/16	8 21/32	4 23/32	3.7795	1.575	1
3 7/16	UCP317-307D1												
90	UCP318D1	118	430	330	110	33	45	45	235	120	96	40	M27
3 7/16	UCP318-307D1	4 41/64	16 15/16	13	4 11/32	1 5/16	1 25/32	1 25/32	9 1/4	4 23/32	3.7795	1.575	1
3 1/2	UCP318-308D1												

Note (1) These numbers indicate relubricatable type. If maintenance free type is needed, please order without suffix "D1".
Remarks Please refer to page **A21** for size of grease fitting.

Bearing number	Housing number	Unit number (1) cast dust cover type	Nominal dimensions mm / inch t max.	H_3	A_5	Mass of unit kg / lb UCP	C(CM)
UC312D1	P312D1	C(CM)-UCP312D1	4	179	135	9.4	11
UC312-204D1	P312D1	C(CM)-UCP312-204D1					
UC312-205D1	P312D1	C(CM)-UCP312-205D1	5/32	7 1/16	5 5/16	21	24
UC312-206D1	P312D1	C(CM)-UCP312-206D1					
UC312-207D1	P312D1	C(CM)-UCP312-207D1					
UC313D1	P313D1	C(CM)-UCP313D1	4	190	140	10	12
UC313-208D1	P313D1	C(CM)-UCP313-208D1	5/32	7 15/32	5 1/2	22	26
UC313-209D1	P313D1	C(CM)-UCP313-209D1					
UC314D1	P314D1	C(CM)-UCP314D1	4	200	140	12	14
UC314-210D1	P314D1	C(CM)-UCP314-210D1					
UC314-211D1	P314D1	C(CM)-UCP314-211D1	5/32	7 7/8	5 1/2	26	31
UC314-212D1	P314D1	C(CM)-UCP314-212D1					
UC315D1	P315D1	C(CM)-UCP315D1	4	210	150	14	17
UC315-213D1	P315D1	C(CM)-UCP315-213D1					
UC315-214D1	P315D1	C(CM)-UCP315-214D1	5/32	8 9/32	5 29/32	31	37
UC315-215D1	P315D1	C(CM)-UCP315-215D1					
UC315-300D1	P315D1	C(CM)-UCP315-300D1					
UC316D1	P316D1	C(CM)-UCP316D1	4	221	155	17	21
UC316-301D1	P316D1	C(CM)-UCP316-301D1					
UC316-302D1	P316D1	C(CM)-UCP316-302D1	5/32	8 11/16	6 3/32	37	46
UC316-303D1	P316D1	C(CM)-UCP316-303D1					
UC317D1	P317D1	C(CM)-UCP317D1	5	235	170	19	24
UC317-304D1	P317D1	C(CM)-UCP317-304D1					
UC317-305D1	P317D1	C(CM)-UCP317-305D1	13/64	9 1/4	6 11/16	42	53
UC317-307D1	P317D1	C(CM)-UCP317-307D1					
UC318D1	P318D1	C(CM)-UCP318D1	5	246	170	22	27
UC318-307D1	P318D1	C(CM)-UCP318-307D1	13/64	9 11/16	6 11/16	49	60
UC318-308D1	P318D1	C(CM)-UCP318-308D1					

Pillow block unit, cast housing
Set screw type

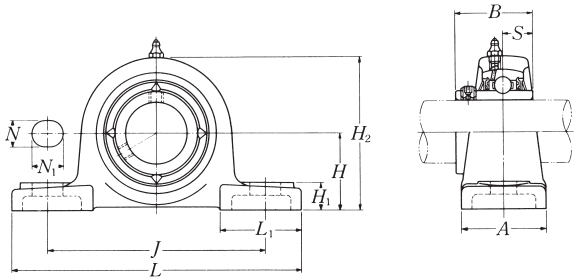

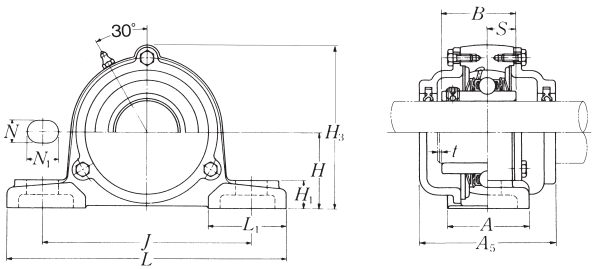

Cast dust cover type
Open end **C-UCP···D1**
Closed end **CM-UCP···D1**

Shaft dia. mm / inch	Unit number (1)	Nominal dimensions mm inch H	L	J	A	N	N_1	H_1	H_2	L_1	B	S	Bolt size mm / inch
95	**UCP319D1**	125	470	360	120	36	50	45	250	125	103	41	M30
3 5/8	**UCP319-310D1**												
3 11/16	**UCP319-311D1**	4 59/64	18 1/2	14 3/16	4 23/32	1 13/32	1 31/32	1 25/32	9 27/32	4 29/32	4.0551	1.614	1 1/8
3 3/4	**UCP319-312D1**												
100	**UCP320D1**	140	490	380	120	36	50	50	275	130	108	42	M30
3 13/16	**UCP320-313D1**												
3 7/8	**UCP320-314D1**	5 33/64	19 9/32	14 31/32	4 23/32	1 13/32	1 31/32	1 31/32	10 13/16	5 1/8	4.2520	1.654	1 1/8
3 15/16	**UCP320-315D1**												
4	**UCP320-400D1**												
105	**UCP321D1**	140	490	380	120	36	50	50	280	130	112	44	M30
110	**UCP322D1**	150	520	400	140	40	55	55	300	135	117	46	M33
120	**UCP324D1**	160	570	450	140	40	55	65	320	140	126	51	M33
130	**UCP326D1**	180	600	480	140	40	55	75	355	140	135	54	M33
140	**UCP328D1**	200	620	500	140	40	55	75	390	140	145	59	M33

Note (1) These numbers indicate relubricatable type. If maintenance free type is needed, please order without suffix "D1".
Remarks Please refer to page **A21** for size of grease fitting.

Bearing number	Housing number	Unit number (1) cast dust cover type	Nominal dimensions mm inch t max.	H_3	A_5	Mass of unit kg lb UCP	C(CM)
UC319D1	P319D1	**C(CM)-UCP319D1**	5	258	180	26	32
UC319-310D1	P319D1	**C(CM)-UCP319-310D1**					
UC319-311D1	P319D1	**C(CM)-UCP319-311D1**	13/64	10 5/32	7 3/32	57	71
UC319-312D1	P319D1	**C(CM)-UCP319-312D1**					
UC320D1	P320D1	**C(CM)-UCP320D1**	5	283	190	33	39
UC320-313D1	P320D1	**C(CM)-UCP320-313D1**					
UC320-314D1	P320D1	**C(CM)-UCP320-314D1**	13/64	11 5/32	7 15/32	73	86
UC320-315D1	P320D1	**C(CM)-UCP320-315D1**					
UC320-400D1	P320D1	**C(CM)-UCP320-400D1**					
UC321D1	P321D1	**C(CM)-UCP321D1**	5	290	195	35	42
UC322D1	P322D1	**C(CM)-UCP322D1**	5	313	200	43	52
UC324D1	P324D1	**C(CM)-UCP324D1**	5	335	215	50	67
UC326D1	P326D1	**C(CM)-UCP326D1**	6	375	225	69	83
UC328D1	P328D1	**C(CM)-UCP328D1**	6	407	235	84	99

Pillow block unit, cast housing
Set screw type

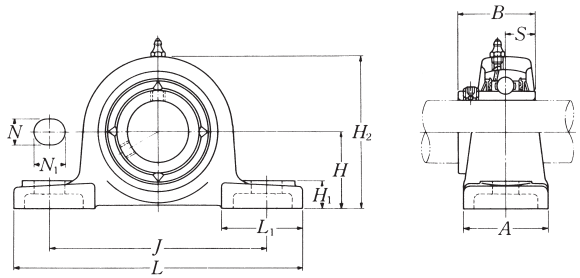

Shaft dia. mm / inch	Unit number (1)	Nominal dimensions mm / inch H	L	J	A	N	N_1	H_1	H_2	L_1	B	S	Bolt size mm / inch
25	UCPX05D1	44.4	159	119	51	17	20	18	85	50	38.1	15.9	M14
13/16	UCPX05-013D1												
7/8	UCPX05-014D1	1 3/4	6 1/4	4 11/16	2	21/32	25/32	23/32	3 11/32	1 31/32	1.5000	0.626	1/2
15/16	UCPX05-015D1												
1	UCPX05-100D1												
30	UCPX06D1	47.6	175	127	57	17	20	20	93	54	42.9	17.5	M14
1 1/16	UCPX06-101D1												
1 1/8	UCPX06-102D1	1 7/8	6 7/8	5	2 1/4	21/32	25/32	25/32	3 21/32	2 1/8	1.6890	0.689	1/2
1 3/16	UCPX06-103D1												
1 1/4	UCPX06-104D1												
35	UCPX07D1	54	203	144	57	17	20	21	105	60	49.2	19	M14
1 5/16	UCPX07-105D1												
1 3/8	UCPX07-106D1	2 1/8	8	5 21/32	2 1/4	21/32	25/32	13/16	4 1/8	2 3/8	1.9370	0.748	1/2
1 7/16	UCPX07-107D1												
40	UCPX08D1	58.7	222	156	67	20	23	26	111	65	49.2	19	M16
1 1/2	UCPX08-108D1	2 5/16	8 3/4	6 5/32	2 5/8	25/32	29/32	1 1/32	4 3/8	2 9/16	1.9370	0.748	5/8
1 9/16	UCPX08-109D1												
45	UCPX09D1	58.7	222	156	67	20	23	26	116	65	51.6	19	M16
1 5/8	UCPX09-110D1												
1 11/16	UCPX09-111D1	2 5/16	8 3/4	6 5/32	2 5/8	25/32	29/32	1 1/32	4 9/16	2 9/16	2.0315	0.748	5/8
1 3/4	UCPX09-112D1												
1 13/16	UCPX09-113D1												
50	UCPX10D1	63.5	241	171	73	20	23	27	126	70	55.6	22.2	M16
1 7/8	UCPX10-114D1												
1 15/16	UCPX10-115D1	2 1/2	9 1/2	6 23/32	2 7/8	25/32	29/32	1 1/16	4 31/32	2 3/4	2.1890	0.874	5/8
2	UCPX10-200D1												

Note (1) These numbers indicate relubricatable type. If maintenance free type is needed, please order without suffix "D1".
Remarks Please refer to page **A21** for size of grease fitting.

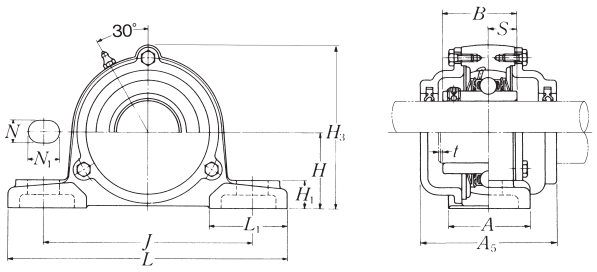

Cast dust cover type
Open end **C-UCP···D1**
Closed end **CM-UCP···D1**

Bearing number	Housing number	Unit number (1) cast dust cover type	Nominal dimensions mm / inch t max.	H_3	A_5	Mass of unit kg / lb UCP	C(CM)
UCX05D1	PX05D1	C(CM)-UCPX05D1	2	89	75	1.4	1.8
UCX05-013D1	PX05D1	C(CM)-UCPX05-013D1					
UCX05-014D1	PX05D1	C(CM)-UCPX05-014D1	5/64	3 1/2	2 15/16	3.1	4.0
UCX05-015D1	PX05D1	C(CM)-UCPX05-015D1					
UCX05-100D1	PX05D1	C(CM)-UCPX05-100D1					
UCX06D1	PX06D1	C(CM)-UCPX06D1	2	99	80	1.9	2.4
UCX06-101D1	PX06D1	C(CM)-UCPX06-101D1					
UCX06-102D1	PX06D1	C(CM)-UCPX06-102D1	5/64	3 29/32	3 5/32	4.2	5.3
UCX06-103D1	PX06D1	C(CM)-UCPX06-103D1					
UC207-104D1	PX06D1	C(CM)-UCPX06-104D1					
UCX07D1	PX07D1	C(CM)-UCPX07D1	3	110	90	2.4	3.3
UCX07-105D1	PX07D1	C(CM)-UCPX07-105D1					
UCX07-106D1	PX07D1	C(CM)-UCPX07-106D1	1/8	4 11/32	3 17/32	5.3	7.3
UCX07-107D1	PX07D1	C(CM)-UCPX07-107D1					
UCX08D1	PX08D1	C(CM)-UCPX08D1	3	118	95	2.9	3.8
UCX08-108D1	PX08D1	C(CM)-UCPX08-108D1	1/8	4 21/32	3 3/4	6.4	8.4
UCX08-109D1	PX08D1	C(CM)-UCPX08-109D1					
UCX09D1	PX09D1	C(CM)-UCPX09D1	3	120	100	3.2	4.2
UCX09-110D1	PX09D1	C(CM)-UCPX09-110D1					
UCX09-111D1	PX09D1	C(CM)-UCPX09-111D1	1/8	4 23/32	3 15/16	7.1	9.3
UCX09-112D1	PX09D1	C(CM)-UCPX09-112D1					
UC210-113D1	PX09D1	C(CM)-UCPX09-113D1					
UCX10D1	PX10D1	C(CM)-UCPX10D1	3	130	100	4.1	5.4
UCX10-114D1	PX10D1	C(CM)-UCPX10-114D1					
UCX10-115D1	PX10D1	C(CM)-UCPX10-115D1	1/8	5 1/8	3 15/16	9.0	12
UC211-200D1	PX10D1	C(CM)-UCPX10-200D1					

Pillow block unit, cast housing
Set screw type

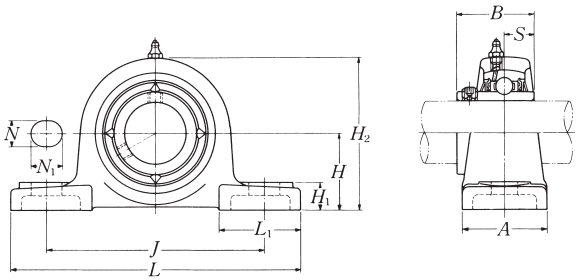

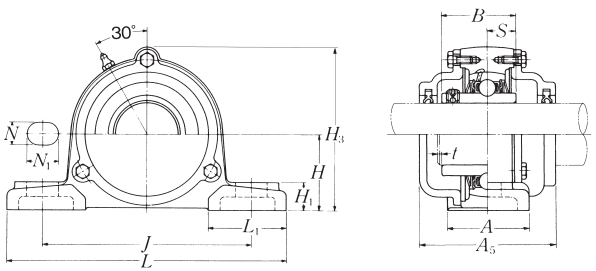

Cast dust cover type
Open end **C-UCP···D1**
Closed end **CM-UCP···D1**

Shaft dia. mm / inch	Unit number (1)	Nominal dimensions mm inch H	L	J	A	N	N_1	H_1	H_2	L_1	B	S	Bolt size mm / inch
55	UCPX11D1	69.8	260	184	79	25	28	30	137	75	65.1	25.4	M20
2 1/16	UCPX11-201D1												
2 1/8	UCPX11-202D1												
2 3/16	UCPX11-203D1	2 3/4	10 1/4	7 1/4	3 1/8	31/32	1 3/32	1 3/16	5 13/32	2 15/16	2.5630	1.000	3/4
2 1/4	UCPX11-204D1												
2 5/16	UCPX11-205D1												
60	UCPX12D1	76.2	286	203	83	25	28	33	151	80	65.1	25.4	M20
2 3/8	UCPX12-206D1	3	11 1/4	8	3 9/32	31/32	1 3/32	1 5/16	5 15/16	3 5/32	2.5630	1.000	3/4
2 7/16	UCPX12-207D1												
65	UCPX13D1	76.2	286	203	83	25	28	33	154	80	74.6	30.2	M20
2 1/2	UCPX13-208D1	3	11 1/4	8	3 9/32	31/32	1 3/32	1 5/16	6 1/16	3 5/32	2.9370	1.189	3/4
2 9/16	UCPX13-209D1												
70	UCPX14D1	88.9	330	229	89	27	30	35	170	95	77.8	33.3	M22
2 5/8	UCPX14-210D1												
2 11/16	UCPX14-211D1	3 1/2	13	9 1/32	3 1/2	1 1/16	1 3/16	1 3/8	6 11/16	3 3/4	3.0630	1.311	7/8
2 3/4	UCPX14-212D1												
75	UCPX15D1	88.9	330	229	89	27	30	35	175	95	82.6	33.3	M22
2 13/16	UCPX15-213D1												
2 7/8	UCPX15-214D1	3 1/2	13	9 1/32	3 1/2	1 1/16	1 3/16	1 3/8	6 7/8	3 3/4	3.2520	1.311	7/8
2 15/16	UCPX15-215D1												
3	UCPX15-300D1												
80	UCPX16D1	101.6	381	283	102	27	30	40	194	110	85.7	34.1	M22
3 1/16	UCPX16-301D1												
3 1/8	UCPX16-302D1	4	15	11 5/32	4 1/32	1 1/16	1 3/16	1 9/16	7 5/8	4 11/32	3.3740	1.343	7/8
3 3/16	UCPX16-303D1												
3 1/4	UCPX16-304D1												
85	UCPX17D1	101.6	381	283	102	27	30	40	200	110	96	39.7	M22
3 5/16	UCPX17-305D1	4	15	11 5/32	4 1/32	1 1/16	1 3/16	1 9/16	7 7/8	4 11/32	3.7795	1.563	7/8
3 7/16	UCPX17-307D1												

Note (1) These numbers indicate relubricatable type. If maintenance free type is needed, please order without suffix "D1".
Remarks Please refer to page **A21** for size of grease fitting.

Bearing number	Housing number	Unit number (1) cast dust cover type	Nominal dimensions mm inch t max.	H_3	A_5	Mass of unit kg lb UCP	C(CM)
UCX11D1	PX11D1	C(CM)-UCPX11D1	4	144	115	5.4	6.9
UCX11-201D1	PX11D1	C(CM)-UCPX11-201D1					
UCX11-202D1	PX11D1	C(CM)-UCPX11-202D1					
UCX11-203D1	PX11D1	C(CM)-UCPX11-203D1	5/32	5 21/32	4 17/32	12	15
UC212-204D1	PX11D1	C(CM)-UCPX11-204D1					
UC212-205D1	PX11D1	C(CM)-UCPX11-205D1					
UCX12D1	PX12D1	C(CM)-UCPX12D1	4	155	120	6.8	8.6
UCX12-206D1	PX12D1	C(CM)-UCPX12-206D1	5/32	6 3/32	4 23/32	15	19
UCX12-207D1	PX12D1	C(CM)-UCPX12-207D1					
UCX13D1	PX13D1	C(CM)-UCPX13D1	4	159	135	7.2	9.4
UCX13-208D1	PX13D1	C(CM)-UCPX13-208D1	5/32	6 1/4	5 5/16	16	21
UCX13-209D1	PX13D1	C(CM)-UCPX13-209D1					
UCX14D1	PX14D1	C(CM)-UCPX14D1	4	175	135	9.3	12
UCX14-210D1	PX14D1	C(CM)-UCPX14-210D1					
UCX14-211D1	PX14D1	C(CM)-UCPX14-211D1	5/32	6 7/8	5 5/16	21	26
UCX14-212D1	PX14D1	C(CM)-UCPX14-212D1					
UCX15D1	PX15D1	C(CM)-UCPX15D1	4	181	145	10	13
UCX15-213D1	PX15D1	C(CM)-UCPX15-213D1					
UCX15-214D1	PX15D1	C(CM)-UCPX15-214D1	5/32	7 1/8	5 23/32	22	29
UCX15-215D1	PX15D1	C(CM)-UCPX15-215D1					
UCX15-300D1	PX15D1	C(CM)-UCPX15-300D1					
UCX16D1	PX16D1	C(CM)-UCPX16D1	4	198	155	14	17
UCX16-301D1	PX16D1	C(CM)-UCPX16-301D1					
UCX16-302D1	PX16D1	C(CM)-UCPX16-302D1	5/32	7 25/32	6 3/32	31	37
UCX16-303D1	PX16D1	C(CM)-UCPX16-303D1					
UC217-304D1	PX16D1	C(CM)-UCPX16-304D1					
UCX17D1	PX17D1	C(CM)-UCPX17D1	5	204	165	15	19
UCX17-305D1	PX17D1	C(CM)-UCPX17-305D1	13/64	8 1/32	6 1/2	33	42
UCX17-307D1	PX17D1	C(CM)-UCPX17-307D1					

Pillow block unit, cast housing
Set screw type

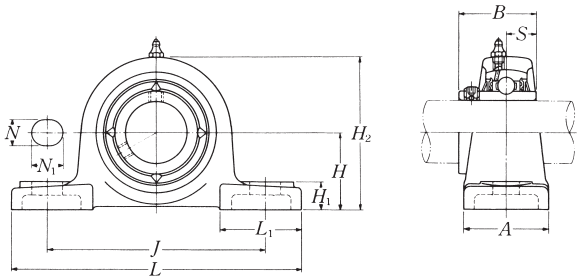

Shaft dia. mm / inch	Unit number (1)	Nominal dimensions mm / inch H	L	J	A	N	N_1	H_1	H_2	L_1	B	S	Bolt size mm / inch
90	**UCPX18D1**	101.6	381	283	111	27	30	40	206	110	104	42.9	M22
3 7/16	**UCPX18-307D1**	4	15	11 5/32	4 3/8	1 1/16	1 3/16	1 9/16	8 1/8	4 11/32	4.0945	1.689	7/8
3 1/2	**UCPX18-308D1**												
100	**UCPX20D1**	127	432	337	121	33	36	45	244	125	117.5	49.2	M27
3 13/16	**UCPX20-313D1**												
3 7/8	**UCPX20-314D1**	5	17	13 9/32	4 3/4	1 5/16	1 13/32	1 25/32	9 19/32	4 29/32	4.6260	1.937	1
3 15/16	**UCPX20-315D1**												
4	**UCPX20-400D1**												

Note (1) These numbers indicate relubricatable type. If maintenance free type is needed, please order without suffix "D1".
Remarks Please refer to page **A21** for size of grease fitting.

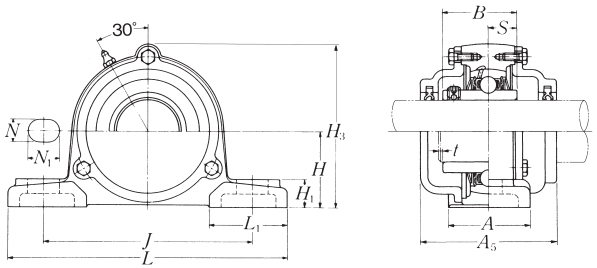

Cast dust cover type
Open end **C-UCP···D1**
Closed end **CM-UCP···D1**

Bearing number	Housing number	Unit number (1) cast dust cover type	Nominal dimensions mm / inch t max.	H_3	A_5	Mass of unit kg / lb UCP	C(CM)
UCX18D1	PX18D1	**C(CM)-UCPX18D1**	5	208	180	16	21
UCX18-307D1	PX18D1	**C(CM)-UCPX18-307D1**	13/64	8 3/16	7 3/32	35	46
UCX18-308D1	PX18D1	**C(CM)-UCPX18-308D1**					
UCX20D1	PX20D1	**C(CM)-UCPX20D1**	5	244	195	25	29
UCX20-313D1	PX20D1	**C(CM)-UCPX20-313D1**					
UCX20-314D1	PX20D1	**C(CM)-UCPX20-314D1**	13/64	9 19/32	7 11/16	55	64
UCX20-315D1	PX20D1	**C(CM)-UCPX20-315D1**					
UCX20-400D1	PX20D1	**C(CM)-UCPX20-400D1**					

Pillow block unit, cast housing low center height
Set screw type

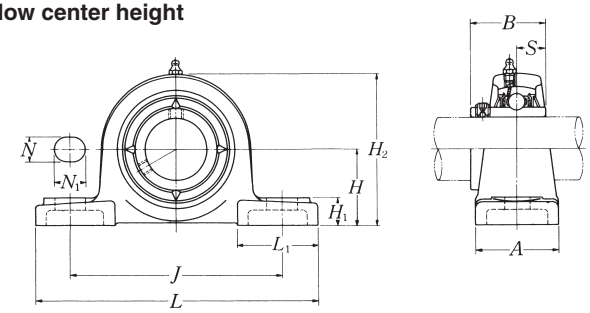

Shaft dia. mm / inch	Unit number (1)(2)(3)	Nominal dimensions mm inch H	L	J	A	N	N_1	H_1	H_2	L_1	B	S	Bolt size mm / inch
20	UCPL204D1	31.75	127	95	38	13	16	14	64	42	31	12.7	M10
3/4	UCPL204-012D1	1 1/4	5	3 3/4	1 1/2	1/2	5/8	9/16	2 17/32	1 21/32	1.2205	0.500	3/8
25	UCPL205D1	33.34	140	105	38	13	16	15	68	42	34.1	14.3	M10
13/16	UCPL205-013D1												
7/8	UCPL205-014D1	1 5/16	5 1/2	4 1/8	1 1/2	1/2	5/8	19/32	2 11/16	1 21/32	1.3425	0.563	3/8
15/16	UCPL205-015D1												
1	UCPL205-100D1												
30	UCPL206D1	39.69	165	121	48	17	20	17	80	54	38.1	15.9	M14
1 1/16	UCPL206-101D1												
1 1/8	UCPL206-102D1	1 9/16	6 1/2	4 3/4	1 7/8	21/32	25/32	21/32	3 5/32	2 1/8	1.5000	0.626	1/2
1 3/16	UCPL206-103D1												
1 1/4	UCPL206-104D1												
35	UCPL207D1	46.04	167	127	48	17	20	18	91	54	42.9	17.5	M14
1 1/4	UCPL207-104D1												
1 5/16	UCPL207-105D1	1 13/16	6 9/16	5	1 7/8	21/32	25/32	23/32	3 19/32	2 1/8	1.6890	0.689	1/2
1 3/8	UCPL207-106D1												
1 7/16	UCPL207-107D1												
45	UCPL209D1	52.39	190	146	54	17	20	20	104	60	49.2	19	M14
1 5/8	UCPL209-110D1												
1 11/16	UCPL209-111D1	2 1/16	7 15/32	5 3/4	2 1/8	21/32	25/32	25/32	4 3/32	2 3/8	1.9370	0.748	1/2
1 3/4	UCPL209-112D1												
50	UCPL210D1	55.56	206	159	60	20	23	21	112	65	51.6	19	M16
1 13/16	UCPL210-113D1												
1 7/8	UCPL210-114D1	2 3/16	8 1/8	6 1/4	2 3/8	25/32	29/32	13/16	4 13/32	2 9/16	2.0315	0.748	5/8
1 15/16	UCPL210-115D1												
2	UCPL210-200D1												

Bearing number	Housing number	Mass of unit kg / lb
UC204D1	PL204D1	0.7
UC204-012D1	PL204D1	1.5
UC205D1	PL205D1	0.8
UC205-013D1	PL205D1	
UC205-014D1	PL205D1	1.8
UC205-015D1	PL205D1	
UC205-100D1	PL205D1	
UC206D1	PL206D1	1.3
UC206-101D1	PL206D1	
UC206-102D1	PL206D1	2.9
UC206-103D1	PL206D1	
UC206-104D1	PL206D1	
UC207D1	PL207D1	1.6
UC207-104D1	PL207D1	
UC207-105D1	PL207D1	3.5
UC207-106D1	PL207D1	
UC207-107D1	PL207D1	
UC209D1	PL209D1	2.2
UC209-110D1	PL209D1	
UC209-111D1	PL209D1	4.9
UC209-112D1	PL209D1	
UC210D1	PL210D1	2.8
UC210-113D1	PL210D1	
UC210-114D1	PL210D1	6.2
UC210-115D1	PL210D1	
UC210-200D1	PL210D1	

Notes (1) These numbers indicate relubricatable type. If maintenance free type is needed, please order without suffix "D1".
(2) UCPL204 and UCPL205 has solid bases.
(3) UCPL208 has the same dimension as UCP208 shown in page **B4**.

Remarks Please refer to page **A21** for size of grease fitting.

Pillow block unit, cast housing low center height
Set screw type

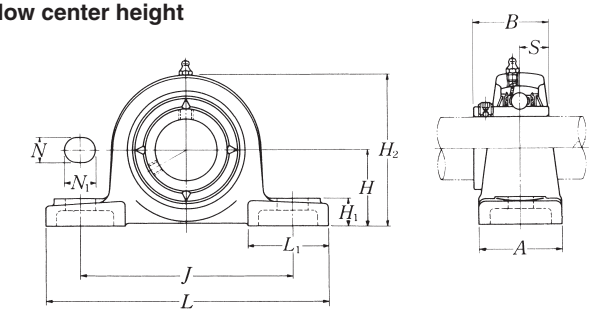

Shaft dia. mm / inch	Unit number (1)	Nominal dimensions mm inch H	L	J	A	N	N_1	H_1	H_2	L_1	B	S	Bolt size mm / inch
55	**UCPL211D1**	61.91	219	171	60	20	23	23	124	65	55.6	22.2	M16
2	**UCPL211-200D1**												
2 1/16	**UCPL211-201D1**	2 7/16	8 5/8	6 23/32	2 3/8	25/32	29/32	29/32	4 7/8	2 9/16	2.1890	0.874	5/8
2 1/8	**UCPL211-202D1**												
2 3/16	**UCPL211-203D1**												
60	**UCPL212D1**	68.26	241	184	70	20	23	25	136	70	65.1	25.4	M16
2 1/4	**UCPL212-204D1**												
2 5/16	**UCPL212-205D1**	2 11/16	9 1/2	7 1/4	2 3/4	25/32	29/32	31/32	5 11/32	2 3/4	2.5630	1.000	5/8
2 3/8	**UCPL212-206D1**												
2 7/16	**UCPL212-207D1**												

Note (1) These numbers indicate relubricatable type. If maintenance free type is needed, please order without suffix "D1".
Remarks Please refer to page **A21** for size of grease fitting.

Bearing number	Housing number	Mass of unit kg lb
UC211D1	PL211D1	3.4
UC211-200D1	PL211D1	
UC211-201D1	PL211D1	7.5
UC211-202D1	PL211D1	
UC211-203D1	PL211D1	
UC212D1	PL212D1	4.7
UC212-204D1	PL212D1	
UC212-205D1	PL212D1	10
UC212-206D1	PL212D1	
UC212-207D1	PL212D1	

Pillow block unit, cast housing low center height
Set screw type

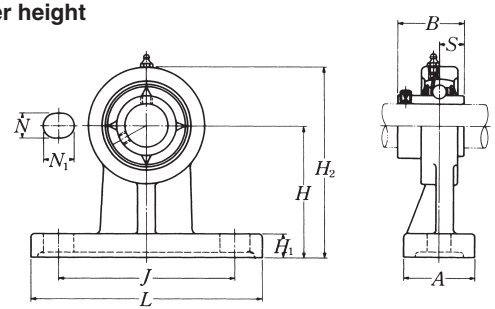

Shaft dia. mm / inch	Unit number (1)	Nominal dimensions mm / inch H	L	J	A	N	N_1	H_1	H_2	B	S	Bolt size mm / inch
12	UCHP201D1	70	127	95	40	13	19	13	101	31	12.7	M10
1/2	UCHP201-008D1	2 3/4	5	3 3/4	1 9/16	1/2	3/4	1/2	3 31/32	1.2205	0.500	3/8
15	UCHP202D1	70	127	95	40	13	19	13	101	31	12.7	M10
9/16	UCHP202-009D1	2 3/4	5	3 3/4	1 9/16	1/2	3/4	1/2	3 31/32	1.2205	0.500	3/8
5/8	UCHP202-010D1											
17	UCHP203D1	70	127	95	40	13	19	13	101	31	12.7	M10
11/16	UCHP203-011D1	2 3/4	5	3 3/4	1 9/16	1/2	3/4	1/2	3 31/32	1.2205	0.500	3/8
20	UCHP204D1	70	127	95	40	13	19	13	101	31	12.7	M10
3/4	UCHP204-012D1	2 3/4	5	3 3/4	1 9/16	1/2	3/4	1/2	3 31/32	1.2205	0.500	3/8
25	UCHP205D1	80	142	105	50	13	19	13	114	34.1	14.3	M10
13/16	UCHP205-013D1											
7/8	UCHP205-014D1	3 5/32	5 19/32	4 1/8	1 31/32	1/2	3/4	1/2	4 1/2	1.3425	0.563	3/8
15/16	UCHP205-015D1											
1	UCHP205-100D1											
30	UCHP206D1	90	165	120	50	17	21	16	130	38.1	15.9	M14
1 1/16	UCHP206-101D1											
1 1/8	UCHP206-102D1	3 35/64	6 1/2	4 23/32	1 31/32	21/32	13/16	5/8	5 1/8	1.5000	0.626	1/2
1 3/16	UCHP206-103D1											
1 1/4	UCHP206-104D1											
35	UCHP207D1	95	166	127	60	17	21	18	140	42.9	17.5	M14
1 1/4	UCHP207-104D1											
1 5/16	UCHP207-105D1	3 47/64	6 17/32	5	2 3/8	21/32	13/16	23/32	5 1/2	1.6890	0.689	1/2
1 3/8	UCHP207-106D1											
1 7/16	UCHP207-107D1											
40	UCHP208D1	100	184	136	70	17	21	20	150	49.2	19	M14
1 1/2	UCHP208-108D1	3 15/16	7 1/4	5 11/32	2 3/4	21/32	13/16	25/32	5 29/32	1.9370	0.748	1/2
1 9/16	UCHP208-109D1											

Bearing number	Housing number	Mass of unit kg / lb
UC201D1	HP204D1	0.9
UC201-008D1	HP204D1	2.0
UC202D1	HP204D1	0.9
UC202-009D1	HP204D1	2.0
UC202-010D1	HP204D1	
UC203D1	HP204D1	0.9
UC203-011D1	HP204D1	2.0
UC204D1	HP204D1	0.9
UC204-012D1	HP204D1	2.0
UC205D1	HP205D1	1.2
UC205-013D1	HP205D1	2.6
UC205-014D1	HP205D1	
UC205-015D1	HP205D1	
UC205-100D1	HP205D1	
UC206D1	HP206D1	1.8
UC206-101D1	HP206D1	4.0
UC206-102D1	HP206D1	
UC206-103D1	HP206D1	
UC206-104D1	HP206D1	
UC207D1	HP207D1	2.3
UC207-104D1	HP207D1	5.1
UC207-105D1	HP207D1	
UC207-106D1	HP207D1	
UC207-107D1	HP207D1	
UC208D1	HP208D1	3.2
UC208-108D1	HP208D1	7.1
UC208-109D1	HP208D1	

Note (1) These numbers indicate relubricatable type. If maintenance free type is needed, please order without suffix "D1".
Remarks Please refer to page **A21** for size of grease fitting.

Pillow block unit, cast housing low center height
Set screw type

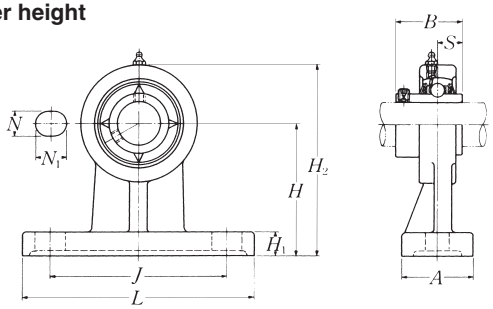

Shaft dia. mm / inch	Unit number (1)	Nominal dimensions mm / inch H	L	J	A	N	N_1	H_1	H_2	B	S	Bolt size mm / inch
45	UCHP209D1	105	190	146	70	17	22	20	158	49.2	19	M14
1 5/8	UCHP209-110D1											
1 11/16	UCHP209-111D1	4 9/64	7 15/32	5 3/4	2 3/4	21/32	7/8	25/32	6 7/32	1.9370	0.748	1/2
1 3/4	UCHP209-112D1											
50	UCHP210D1	110	206	159	70	20	22	22	165	51.6	19	M16
1 13/16	UCHP210-113D1											
1 7/8	UCHP210-114D1	4 21/64	8 1/8	6 1/4	2 3/4	25/32	7/8	7/8	6 1/2	2.0315	0.748	5/8
1 15/16	UCHP210-115D1											
2	UCHP210-200D1											

Note (1) These numbers indicate relubricatable type. If maintenance free type is needed, please order without suffix "D1".
Remarks Please refer to page **A21** for size of grease fitting.

Bearing number	Housing number	Mass of unit kg / lb
UC209D1	HP209D1	3.5
UC209-110D1	HP209D1	
UC209-111D1	HP209D1	7.7
UC209-112D1	HP209D1	
UC210D1	HP210D1	3.9
UC210-113D1	HP210D1	
UC210-114D1	HP210D1	8.6
UC210-115D1	HP210D1	
UC210-200D1	HP210D1	

Narrow pillow block unit, cast housing
Set screw type

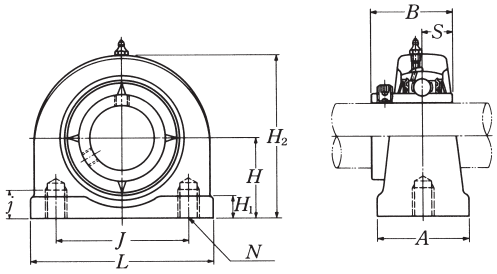

Shaft dia. mm / inch	Unit number (1)	Nominal dimensions mm / inch H	L	J	A	j	H_1	H_2	B	S	N
12	**UCUP201D1**	30.2	76	52	38	13	11	62	31	12.7	M10×1.5
1/2	**UCUP201-008D1**	1 3/16	3	2 1/16	1 1/2	1/2	7/16	2 7/16	1.2205	0.500	
15	**UCUP202D1**	30.2	76	52	38	13	11	62	31	12.7	M10×1.5
9/16	**UCUP202-009D1**	1 3/16	3	2 1/16	1 1/2	1/2	7/16	2 7/16	1.2205	0.500	
5/8	**UCUP202-010D1**										
17	**UCUP203D1**	30.2	76	52	38	13	11	62	31	12.7	M10×1.5
11/16	**UCUP203-011D1**	1 3/16	3	2 1/16	1 1/2	1/2	7/16	2 7/16	1.2205	0.500	
20	**UCUP204D1**	30.2	76	52	38	13	11	62	31	12.7	M10×1.5
3/4	**UCUP204-012D1**	1 3/16	3	2 1/16	1 1/2	1/2	7/16	2 7/16	1.2205	0.500	
25	**UCUP205D1**	36.5	84	56	38	15	12	72	34.1	14.3	M10×1.5
13/16	**UCUP205-013D1**	1 7/16	3 5/16	2 7/32	1 1/2	19/32	15/32	2 27/32	1.3425	0.563	
7/8	**UCUP205-014D1**										
15/16	**UCUP205-015D1**										
1	**UCUP205-100D1**										
30	**UCUP206D1**	42.9	94	66	48	18	12	84	38.1	15.9	M14×2
1 1/16	**UCUP206-101D1**	1 11/16	3 11/16	2 19/32	1 7/8	23/32	15/32	3 5/16	1.5000	0.629	
1 1/8	**UCUP206-102D1**										
1 3/16	**UCUP206-103D1**										
1 1/4	**UCUP206-104D1**										
35	**UCUP207D1**	47.6	110	80	48	20	13	95	42.9	17.5	M14×2
1 1/4	**UCUP207-104D1**	1 7/8	4 11/32	3 5/32	1 7/8	25/32	1/2	3 3/4	1.6890	0.689	
1 5/16	**UCUP207-105D1**										
1 3/8	**UCUP207-106D1**										
1 7/16	**UCUP207-107D1**										
40	**UCUP208D1**	49.2	116	84	54	20	13	100	49.2	19	M14×2
1 1/2	**UCUP208-108D1**	1 15/16	4 9/16	3 5/16	2 1/8	25/32	1/2	3 15/16	1.9370	0.748	
1 9/16	**UCUP208-109D1**										

Bearing number	Housing number	Mass of unit kg / lb
UC201D1	UP204D1	0.6
UC201-008D1	UP204D1	1.3
UC202D1	UP204D1	0.6
UC202-009D1	UP204D1	1.3
UC202-010D1	UP204D1	
UC203D1	UP204D1	0.6
UC203-011D1	UP204D1	1.3
UC204D1	UP204D1	0.6
UC204-012D1	UP204D1	1.3
UC205D1	UP205D1	0.7
UC205-013D1	UP205D1	1.5
UC205-014D1	UP205D1	
UC205-015D1	UP205D1	
UC205-100D1	UP205D1	
UC206D1	UP206D1	1.1
UC206-101D1	UP206D1	2.4
UC206-102D1	UP206D1	
UC206-103D1	UP206D1	
UC206-104D1	UP206D1	
UC207D1	UP207D1	1.6
UC207-104D1	UP207D1	3.5
UC207-105D1	UP207D1	
UC207-106D1	UP207D1	
UC207-107D1	UP207D1	
UC208D1	UP208D1	1.8
UC208-108D1	UP208D1	4.0
UC208-109D1	UP208D1	

Note (1) These numbers indicate relubricatable type. If maintenance free type is needed, please order without suffix "D1".
Remarks Please refer to page **A21** for size of grease fitting.

Narrow pillow block unit, cast housing
Set screw type

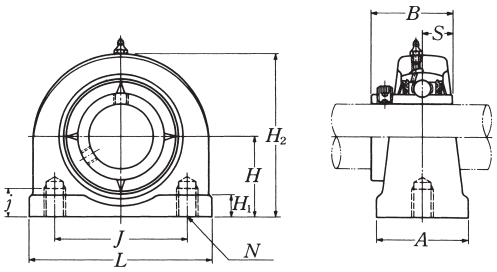

Shaft dia. mm / inch	Unit number (1)	Nominal dimensions mm / inch H	L	J	A	j	H_1	H_2	B	S	N
45	**UCUP209D1**	54.2	120	90	54	25	13	108	49.2	19	M14×2
1 5/8	**UCUP209-110D1**										
1 11/16	**UCUP209-111D1**	2 9/64	4 23/32	3 17/32	2 1/8	31/32	1/2	4 1/4	1.9370	0.748	
1 3/4	**UCUP209-112D1**										
50	**UCUP210D1**	57.2	130	94	60	25	14	116	51.6	19	M16×2
1 13/16	**UCUP210-113D1**										
1 7/8	**UCUP210-114D1**	2 1/4	5 1/8	3 11/16	2 3/8	31/32	9/16	4 9/16	2.0315	0.748	
1 15/16	**UCUP210-115D1**										
2	**UCUP210-200D1**										

Bearing number	Housing number	Mass of unit kg / lb
UC209D1	UP209D1	2.1
UC209-110D1	UP209D1	
UC209-111D1	UP209D1	4.6
UC209-112D1	UP209D1	
UC210D1	UP210D1	2.6
UC210-113D1	UP210D1	
UC210-114D1	UP210D1	5.7
UC210-115D1	UP210D1	
UC210-200D1	UP210D1	

Note (1) These numbers indicate relubricatable type. If maintenance free type is needed, please order without suffix "D1".
Remarks Please refer to page **A21** for size of grease fitting.

Pillow block unit, cast housing low center height
Set screw type

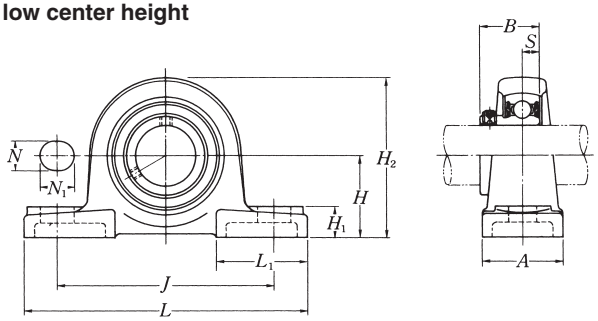

Shaft dia. mm / inch	Unit number (1)(2)(3)	Nominal dimensions mm inch H	L	J	A	N	N_1	H_1	H_2	L_1	B	S	Bolt size mm / inch
12	ASPL201	26.99	121	89	35	11	14	13	54	40	22	6	M10
1/2	ASPL201-008	1 1/16	4 3/4	3 1/2	1 3/8	7/16	9/16	1/2	2 1/8	1 9/16	0.8661	0.236	3/8
15	ASPL202	26.99	121	89	35	11	14	13	54	40	22	6	M10
9/16	ASPL202-009	1 1/16	4 3/4	3 1/2	1 3/8	7/16	9/16	1/2	2 1/8	1 9/16	0.8661	0.236	3/8
5/8	ASPL202-010												
17	ASPL203	26.99	121	89	35	11	14	13	54	40	22	6	M10
11/16	ASPL203-011	1 1/16	4 3/4	3 1/2	1 3/8	7/16	9/16	1/2	2 1/8	1 9/16	0.8661	0.236	3/8
20	ASPL204	31.75	127	95	38	13	16	14	64	42	25	7	M10
3/4	ASPL204-012	1 1/4	5	3 3/4	1 1/2	1/2	5/8	9/16	2 17/32	1 21/32	0.9843	0.276	3/8
25	ASPL205	33.34	140	105	38	13	16	15	68	42	27	7.5	M10
13/16	ASPL205-013	1 5/16	5 1/2	4 1/8	1 1/2	1/2	5/8	19/32	2 11/16	1 21/32	1.0630	0.295	3/8
7/8	ASPL205-014												
15/16	ASPL205-015												
1	ASPL205-100												
30	ASPL206	39.69	165	121	48	17	20	17	80	54	29	8	M14
1 1/16	ASPL206-101	1 9/16	6 1/2	4 3/4	1 7/8	21/32	25/32	21/32	3 5/32	2 1/8	1.1417	0.315	1/2
1 1/8	ASPL206-102												
1 3/16	ASPL206-103												
1 1/4	ASPL206-104												
35	ASPL207	46.04	167	127	48	17	20	18	91	54	34	8.5	M14
1 1/4	ASPL207-104	1 13/16	6 9/16	5	1 7/8	21/32	25/32	23/32	3 19/32	2 1/8	1.3386	0.335	1/2
1 5/16	ASPL207-105												
1 3/8	ASPL207-106												
1 7/16	ASPL207-107												
40	ASP208	49.2	184	137	54	17	20	18	98	52	38	9	M14
1 1/2	ASP208-108	1 15/16	7 1/4	5 13/32	2 1/8	21/32	25/32	23/32	3 27/32	2 1/16	1.4961	0.354	1/2
1 9/16	ASP208-109												

Notes (1) ASPL201 to ASPL205 has solid bases.
(2) If relubricatable type is needed, please order with suffix "D1".
(3) ASPL208 has the same dimension an ASP208.

Bearing number (2)	Housing number (2)	Mass of unit kg / lb
AS201	PL201	0.5
AS201-008	PL201	1.1
AS202	PL201	0.5
AS202-009	PL201	1.1
AS202-010	PL201	
AS203	PL201	0.5
AS203-011	PL201	1.1
AS204	PL204	0.7
AS204-012	PL204	1.5
AS205	PL205	0.8
AS205-013	PL205	1.8
AS205-014	PL205	
AS205-015	PL205	
AS205-100	PL205	
AS206	PL206	1.2
AS206-101	PL206	2.6
AS206-102	PL206	
AS206-103	PL206	
AS206-104	PL206	
AS207	PL207	1.5
AS207-104	PL207	3.3
AS207-105	PL207	
AS207-106	PL207	
AS207-107	PL207	
AS208	P208	1.8
AS208-108	P208	4.0
AS208-109	P208	

Pillow block unit, cast housing low center height
Set screw type

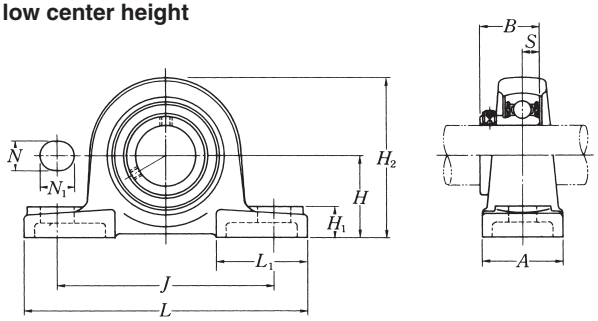

Shaft dia. mm / inch	Unit number (1)	Nominal dimensions mm inch H	L	J	A	N	N_1	H_1	H_2	L_1	B	S	Bolt size mm / inch
45	ASPL209	52.39	190	146	54	17	20	20	104	60	40	9.5	M14
1 5/8	ASPL209-110												
1 11/16	ASPL209-111	2 1/16	7 15/32	5 3/4	2 1/8	21/32	25/32	25/32	4 3/32	2 3/8	1.578	0.374	1/2
1 3/4	ASPL209-112												
50	ASPL210	55.56	206	159	60	20	23	21	112	65	42	10	M16
1 13/16	ASPL210-113												
1 7/8	ASPL210-114	2 3/16	8 1/8	6 1/4	2 3/8	25/32	29/32	13/16	4 13/32	2 9/16	1.635	0.394	5/8
1 15/16	ASPL210-115												
2	ASPL210-200												

Note (1) If relubricatable type is needed, please order with suffix "D1".

Bearing number (1)	Housing number (1)	Mass of unit kg / lb
AS209	PL209	2.0
AS209-110	PL209	
AS209-111	PL209	4.4
AS209-112	PL209	
AS210	PL210	2.6
AS210-113	PL210	
AS210-114	PL210	5.7
AS210-115	PL210	
AS210-200	PL210	

Pillow block unit, pressed steel housing
Set screw type

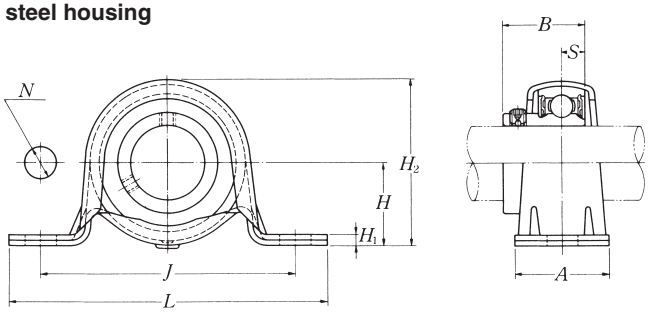

Shaft dia. mm / inch	Unit number	Nominal dimensions mm / inch H	L	J	A	N	H_1	H_2	B	S	Bolt size mm / inch	Max. load (1) recommended N / lbf radial	axial	Bearing number	Housing number	Mass of unit kg / lb
12	ASPP201	22.2	86	68	25	9.5	3.2	43.8	22	6	M8	2 000	800	AS201	PP203	0.2
1/2	ASPP201-008	7/8	3 3/8	2 11/16	31/32	3/8	0.126	1 23/32	0.8661	0.236	5/16	440	160	AS201-008	PP203	0.4
15	ASPP202	22.2	86	68	25	9.5	3.2	43.8	22	6	M8	2 000	800	AS202	PP203	0.2
9/16	ASPP202-009	7/8	3 3/8	2 11/16	31/32	3/8	0.126	1 23/32	0.8661	0.236	5/16	440	160	AS202-009	PP203	0.4
5/8	ASPP202-010													AS202-010	PP203	
17	ASPP203	22.2	86	68	25	9.5	3.2	43.8	22	6	M8	2 000	800	AS203	PP203	0.1
11/16	ASPP203-011	7/8	3 3/8	2 11/16	31/32	3/8	0.126	1 23/32	0.8661	0.236	5/16	440	160	AS203-011	PP203	0.2
20	ASPP204	25.4	98	76	32	9.5	3.2	50.5	25	7	M8	2 500	1 000	AS204	PP204	0.2
3/4	ASPP204-012	1	3 27/32	3	1 1/4	3/8	0.126	2	0.9843	0.276	5/16	550	200	AS204-012	PP204	0.4
25	ASPP205	28.6	108	86	32	11.5	4	56.6	27	7.5	M10	3 500	1 400	AS205	PP205	0.3
13/16	ASPP205-013													AS205-013	PP205	
7/8	ASPP205-014	1 1/8	4 1/4	3 3/8	1 1/4	29/64	0.157	2 7/32	1.0630	0.295	3/8	770	280	AS205-014	PP205	0.7
15/16	ASPP205-015													AS205-015	PP205	
1	ASPP205-100													AS205-100	PP205	
30	ASPP206	33.3	117	95	38	11.5	4	66.3	29	8	M10	4 000	1 600	AS206	PP206	0.4
1 1/16	ASPP206-101													AS206-101	PP206	
1 1/8	ASPP206-102	1 5/16	4 19/32	3 3/4	1 1/2	29/64	0.157	2 5/8	1.1417	0.315	3/8	880	320	AS206-102	PP206	0.9
1 3/16	ASPP206-103													AS206-103	PP206	
1 1/4	ASPP206-104													AS206-104	PP206	
35	ASPP207	39.7	129	106	42	11.5	4.6	78	34	8.5	M10	4 500	1 800	AS207	PP207	0.6
1 1/4	ASPP207-104													AS207-104	PP207	
1 5/16	ASPP207-105	1 9/16	5 3/32	4 3/16	1 21/32	29/64	0.181	3 1/16	1.3386	0.335	3/8	990	360	AS207-105	PP207	1.3
1 3/8	ASPP207-106													AS207-106	PP207	
1 7/16	ASPP207-107													AS207-107	PP207	

Note (1) The permissible load only applies in applications where the load is stable and the speed is 2400 min^{-1} or less.
The mounting surface should be flat.

Pillow block unit, pressed steel housing with rubber ring
Set screw type

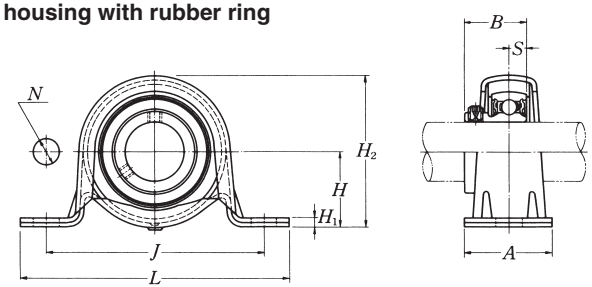

Shaft dia. mm / inch	Unit number	Nominal dimensions mm / inch H	L	J	A	N	H_1	H_2	B	S	Bolt size mm / inch
12	ASRPP201	25.4	98	76	32	9.5	3.2	50.5	22	6	M8
1/2	ASRPP201-008	1	3 27/32	3	1 1/4	3/8	0.126	2	0.8661	0.236	5/16
15	ASRPP202	25.4	98	76	32	9.5	3.2	50.5	22	6	M8
9/16	ASRPP202-009	1	3 27/32	3	1 1/4	3/8	0.126	2	0.8661	0.236	5/16
5/8	ASRPP202-010										
17	ASRPP203	25.4	98	76	32	9.5	3.2	50.5	22	6	M8
11/16	ASRPP203-011	1	3 27/32	3	1 1/4	3/8	0.126	2	0.8661	0.236	5/16
20	ASRPP204	28.6	108	86	32	11.5	4	56.6	25	7	M10
3/4	ASRPP204-012	1 1/8	4 1/4	3 3/8	1 1/4	29/64	0.157	2 7/32	0.9843	0.276	3/8
25	ASRPP205	33.3	117	95	38	11.5	4	66.3	27	7.5	M10
13/16	ASRPP205-013	1 5/16	4 19/32	3 3/4	1 1/2	29/64	0.157	2 5/8	1.0630	0.295	3/8
7/8	ASRPP205-014										
15/16	ASRPP205-015										
1	ASRPP205-100										
30	ASRPP206	39.7	129	106	42	11.5	4.6	78	29	8	M10
1 1/16	ASRPP206-101	1 9/16	5 3/32	4 3/16	1 21/32	29/64	0.181	3 1/16	1.1417	0.315	3/8
1 1/8	ASRPP206-102										
1 3/16	ASRPP206-103										
1 1/4	ASRPP206-104										

Max. load (1) recommended N / lbf radial	axial	Bearing number	Housing number rubber ring	steel	Mass of unit kg / lb
1 000	200	AS201	R201	PP204	0.2
220	40	AS201-008	R201	PP204	0.4
1 000	200	AS202	R201	PP204	0.2
220	40	AS202-009	R201	PP204	0.4
		AS202-010	R201	PP204	
1 000	200	AS203	R201	PP204	0.2
220	40	AS203-011	R201	PP204	0.4
1 150	200	AS204	R204	PP205	0.3
250	40	AS204-012	R204	PP205	0.7
1 300	200	AS205	R205	PP206	0.4
280	40	AS205-013	R205	PP206	0.9
		AS205-014	R205	PP206	
		AS205-015	R205	PP206	
		AS205-100	R205	PP206	
1 500	200	AS206	R206	PP207	0.5
330	40	AS206-101	R206	PP207	1.1
		AS206-102	R206	PP207	
		AS206-103	R206	PP207	
		AS206-104	R206	PP207	

Note (1) The permissible load only applies in applications where the load is stable and the speed is 2400 min^{-1} or less.
The mounting surface should be flat.

Remarks When an anti-vibration rubber ring is used, the self alignment capability will be reduce.

Square flanged unit, cast housing
Set screw type

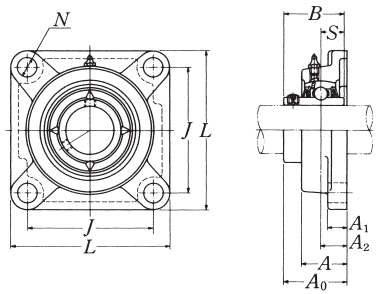

Shaft dia. mm / inch	Unit number (1)	Nominal dimensions mm / inch L	J	A_2	A_1	A	N	A_0	B	S	Bolt size mm / inch	Bearing number
12	**UCF201D1**	86	64	15	11	25.5	12	33.3	31	12.7	M10	UC201D1
1/2	**UCF201-008D1**	3 3/8	2 33/64	19/32	7/16	1	15/32	1 5/16	1.2205	0.500	3/8	UC201-008D1
15	**UCF202D1**	86	64	15	11	25.5	12	33.3	31	12.7	M10	UC202D1
9/16	**UCF202-009D1**	3 3/8	2 33/64	19/32	7/16	1	15/32	1 5/16	1.2205	0.500	3/8	UC202-009D1
5/8	**UCF202-010D1**											UC202-010D1
17	**UCF203D1**	86	64	15	11	25.5	12	33.3	31	12.7	M10	UC203D1
11/16	**UCF203-011D1**	3 3/8	2 33/64	19/32	7/16	1	15/32	1 5/16	1.2205	0.500	3/8	UC203-011D1
20	**UCF204D1**	86	64	15	11	25.5	12	33.3	31	12.7	M10	UC204D1
3/4	**UCF204-012D1**	3 3/8	2 33/64	19/32	7/16	1	15/32	1 5/16	1.2205	0.500	3/8	UC204-012D1
25	**UCF205D1**	95	70	16	13	27	12	35.8	34.1	14.3	M10	UC205D1
13/16	**UCF205-013D1**											UC205-013D1
7/8	**UCF205-014D1**	3 3/4	2 3/4	5/8	1/2	1 1/16	15/32	1 13/32	1.3425	0.563	3/8	UC205-014D1
15/16	**UCF205-015D1**											UC205-015D1
1	**UCF205-100D1**											UC205-100D1
30	**UCF206D1**	108	83	18	13	31	12	40.2	38.1	15.9	M10	UC206D1
1 1/16	**UCF206-101D1**											UC206-101D1
1 1/8	**UCF206-102D1**	4 1/4	3 17/64	45/64	1/2	1 7/32	15/32	1 37/64	1.5000	0.626	3/8	UC206-102D1
1 3/16	**UCF206-103D1**											UC206-103D1
1 1/4	**UCF206-104D1**											UC206-104D1
35	**UCF207D1**	117	92	19	15	34	14	44.4	42.9	17.5	M12	UC207D1
1 1/4	**UCF207-104D1**											UC207-104D1
1 5/16	**UCF207-105D1**	4 19/32	3 5/8	3/4	19/32	1 11/32	35/64	1 3/4	1.6890	0.689	7/16	UC207-105D1
1 3/8	**UCF207-106D1**											UC207-106D1
1 7/16	**UCF207-107D1**											UC207-107D1
40	**UCF208D1**	130	102	21	15	36	16	51.2	49.2	19	M14	UC208D1
1 1/2	**UCF208-108D1**	5 1/8	4 1/64	53/64	19/32	1 13/32	5/8	2 1/64	1.9370	0.748	1/2	UC208-108D1
1 9/16	**UCF208-109D1**											UC208-109D1
45	**UCF209D1**	137	105	22	16	38	16	52.2	49.2	19	M14	UC209D1
1 5/8	**UCF209-110D1**											UC209-110D1
1 11/16	**UCF209-111D1**	5 13/32	4 9/64	55/64	5/8	1 1/2	5/8	2 1/16	1.9370	0.748	1/2	UC209-111D1
1 3/4	**UCF209-112D1**											UC209-112D1

Note (1) These numbers indicate relubricatable type. If maintenance free type is needed, please order without suffix "D1".
Remarks Please refer to page **A21** for size of grease fitting.

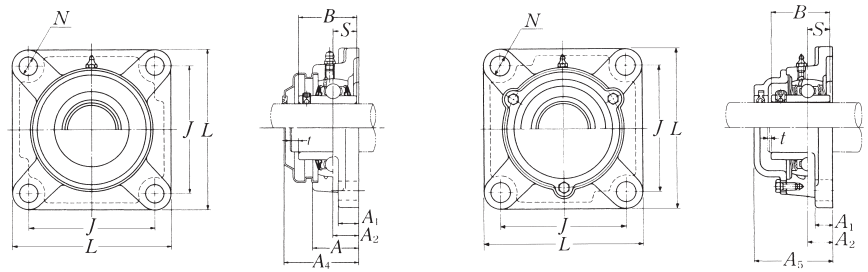

Pressed steel dust cover type
Open end **Z-UCF…D1**
Closed end **ZM-UCF…D1**

Cast dust cover type
Open end **C-UCF…D1**
Closed end **CM-UCF…D1**

Housing number	Unit number (1) pressed steel dust cover type	Unit number (1) cast dust cover type	Nominal dimensions mm / inch t max.	A_4	A_5	Mass of unit kg / lb UCF	Z(ZM)	C(CM)
F204D1	**Z(ZM)-UCF201D1**	**C(CM)-UCF201D1**	2	38	46	0.6	0.6	0.8
F204D1	**Z(ZM)-UCF201-008D1**	**C(CM)-UCF201-008D1**	5/64	1 1/2	1 13/16	1.3	1.3	1.8
F204D1	**Z(ZM)-UCF202D1**	**C(CM)-UCF202D1**	2	38	46	0.6	0.6	0.8
F204D1	**Z(ZM)-UCF202-009D1**	**C(CM)-UCF202-009D1**	5/64	1 1/2	1 13/16	1.3	1.3	1.8
F204D1	**Z(ZM)-UCF202-010D1**	**C(CM)-UCF202-010D1**						
F204D1	**Z(ZM)-UCF203D1**	**C(CM)-UCF203D1**	2	38	46	0.6	0.6	0.8
F204D1	**Z(ZM)-UCF203-011D1**	**C(CM)-UCF203-011D1**	5/64	1 1/2	1 13/16	1.3	1.3	1.8
F204D1	**Z(ZM)-UCF204D1**	**C(CM)-UCF204D1**	2	38	46	0.6	0.6	0.7
F204D1	**Z(ZM)-UCF204-012D1**	**C(CM)-UCF204-012D1**	5/64	1 1/2	1 13/16	1.3	1.3	1.5
F205D1	**Z(ZM)-UCF205D1**	**C(CM)-UCF205D1**	2	40	51	0.8	0.8	0.9
F205D1	**Z(ZM)-UCF205-013D1**	**C(CM)-UCF205-013D1**						
F205D1	**Z(ZM)-UCF205-014D1**	**C(CM)-UCF205-014D1**	5/64	1 19/32	2	1.8	1.8	2.0
F205D1	**Z(ZM)-UCF205-015D1**	**C(CM)-UCF205-015D1**						
F205D1	**Z(ZM)-UCF205-100D1**	**C(CM)-UCF205-100D1**						
F206D1	**Z(ZM)-UCF206D1**	**C(CM)-UCF206D1**	2	45	56	1.1	1.1	1.3
F206D1	**Z(ZM)-UCF206-101D1**	**C(CM)-UCF206-101D1**						
F206D1	**Z(ZM)-UCF206-102D1**	**C(CM)-UCF206-102D1**	5/64	1 3/4	2 7/32	2.4	2.4	2.9
F206D1	**Z(ZM)-UCF206-103D1**	**C(CM)-UCF206-103D1**						
F206D1	**—**	**C(CM)-UCF206-104D1**						
F207D1	**Z(ZM)-UCF207D1**	**C(CM)-UCF207D1**	3	49	59	1.5	1.5	1.8
F207D1	**Z(ZM)-UCF207-104D1**	**C(CM)-UCF207-104D1**						
F207D1	**Z(ZM)-UCF207-105D1**	**C(CM)-UCF207-105D1**	1/8	1 15/16	2 5/16	3.3	3.3	4.0
F207D1	**Z(ZM)-UCF207-106D1**	**C(CM)-UCF207-106D1**						
F207D1	**—**	**C(CM)-UCF207-107D1**						
F208D1	**Z(ZM)-UCF208D1**	**C(CM)-UCF208D1**	3	56	66	1.7	1.8	2.2
F208D1	**Z(ZM)-UCF208-108D1**	**C(CM)-UCF208-108D1**	1/8	2 3/16	2 19/32	3.7	4.0	4.9
F208D1	**Z(ZM)-UCF208-109D1**	**C(CM)-UCF208-109D1**						
F209D1	**Z(ZM)-UCF209D1**	**C(CM)-UCF209D1**	3	57	70	2.1	2.2	2.6
F209D1	**Z(ZM)-UCF209-110D1**	**C(CM)-UCF209-110D1**						
F209D1	**Z(ZM)-UCF209-111D1**	**C(CM)-UCF209-111D1**	1/8	2 1/4	2 3/4	4.6	4.9	5.7
F209D1	**Z(ZM)-UCF209-112D1**	**C(CM)-UCF209-112D1**						

Square flanged unit, cast housing
Set screw type

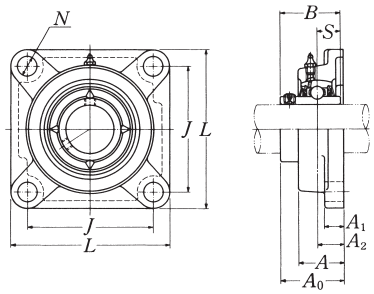

Shaft dia. mm / inch	Unit number (1)	Nominal dimensions mm inch L	J	A_2	A_1	A	N	A_0	B	S	Bolt size mm / inch	Bearing number
50	UCF210D1	143	111	22	16	40	16	54.6	51.6	19	M14	UC210D1
1 13/16	UCF210-113D1											UC210-113D1
1 7/8	UCF210-114D1	5 5/8	4 3/8	55/64	5/8	1 9/16	5/8	2 5/32	2.0315	0.748	1/2	UC210-114D1
1 15/16	UCF210-115D1											UC210-115D1
2	UCF210-200D1											UC210-200D1
55	UCF211D1	162	130	25	18	43	19	58.4	55.6	22.2	M16	UC211D1
2	UCF211-200D1											UC211-200D1
2 1/16	UCF211-201D1	6 3/8	5 1/8	63/64	23/32	1 11/16	3/4	2 19/64	2.1890	0.874	5/8	UC211-201D1
2 1/8	UCF211-202D1											UC211-202D1
2 3/16	UCF211-203D1											UC211-203D1
60	UCF212D1	175	143	29	18	48	19	68.7	65.1	25.4	M16	UC212D1
2 1/4	UCF212-204D1											UC212-204D1
2 5/16	UCF212-205D1	6 7/8	5 5/8	1 9/64	23/32	1 7/8	3/4	2 45/64	2.5630	1.000	5/8	UC212-205D1
2 3/8	UCF212-206D1											UC212-206D1
2 7/16	UCF212-207D1											UC212-207D1
65	UCF213D1	187	149	30	22	50	19	69.7	65.1	25.4	M16	UC213D1
2 1/2	UCF213-208D1	7 3/8	5 55/64	1 3/16	7/8	1 31/32	3/4	2 3/4	2.5630	1.000	5/8	UC213-208D1
2 9/16	UCF213-209D1											UC213-209D1
70	UCF214D1	193	152	31	22	54	19	75.4	74.6	30.2	M16	UC214D1
2 5/8	UCF214-210D1											UC214-210D1
2 11/16	UCF214-211D1	7 19/32	5 63/64	1 7/32	7/8	2 1/8	3/4	2 31/32	2.9370	1.189	5/8	UC214-211D1
2 3/4	UCF214-212D1											UC214-212D1
75	UCF215D1	200	159	34	22	56	19	78.5	77.8	33.3	M16	UC215D1
2 13/16	UCF215-213D1											UC215-213D1
2 7/8	UCF215-214D1	7 7/8	6 17/64	1 11/32	7/8	2 7/32	3/4	3 3/32	3.0630	1.311	5/8	UC215-214D1
2 15/16	UCF215-215D1											UC215-215D1
3	UCF215-300D1											UC215-300D1
80	UCF216D1	208	165	34	22	58	23	83.3	82.6	33.3	M20	UC216D1
3 1/16	UCF216-301D1											UC216-301D1
3 1/8	UCF216-302D1	8 3/16	6 1/2	1 11/32	7/8	2 9/32	29/32	3 9/32	3.2520	1.311	3/4	UC216-302D1
3 3/16	UCF216-303D1											UC216-303D1

Note (1) These numbers indicate relubricatable type. If maintenance free type is needed, please order without suffix "D1".
Remarks Please refer to page **A21** for size of grease fitting.

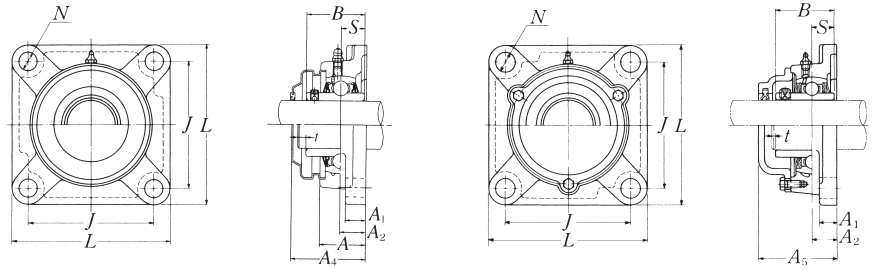

Pressed steel dust cover type
Open end **Z-UCF···D1**
Closed end **ZM-UCF···D1**

Cast dust cover type
Open end **C-UCF···D1**
Closed end **CM-UCF···D1**

Housing number	Unit number (1) pressed steel dust cover type	Unit number (1) cast dust cover type	Nominal dimensions mm inch t max.	A_4	A_5	Mass of unit kg lb UCF	Z(ZM)	C(CM)
F210D1	Z(ZM)-UCF210D1	C(CM)-UCF210D1	3	60	72	2.5	2.5	3.0
F210D1	Z(ZM)-UCF210-113D1	C(CM)-UCF210-113D1						
F210D1	Z(ZM)-UCF210-114D1	C(CM)-UCF210-114D1	1/8	2 3/8	2 27/32	5.5	5.5	6.6
F210D1	Z(ZM)-UCF210-115D1	C(CM)-UCF210-115D1						
F210D1	—	C(CM)-UCF210-200D1						
F211D1	Z(ZM)-UCF211D1	C(CM)-UCF211D1	4	64	75	3.3	3.4	4.0
F211D1	Z(ZM)-UCF211-200D1	C(CM)-UCF211-200D1						
F211D1	Z(ZM)-UCF211-201D1	C(CM)-UCF211-201D1	5/32	2 1/2	2 15/16	7.3	7.5	8.8
F211D1	Z(ZM)-UCF211-202D1	C(CM)-UCF211-202D1						
F211D1	Z(ZM)-UCF211-203D1	C(CM)-UCF211-203D1						
F212D1	Z(ZM)-UCF212D1	C(CM)-UCF212D1	4	74	86	3.9	4.1	4.8
F212D1	Z(ZM)-UCF212-204D1	C(CM)-UCF212-204D1						
F212D1	Z(ZM)-UCF212-205D1	C(CM)-UCF212-205D1	5/32	2 29/32	3 3/8	8.6	9.0	11
F212D1	Z(ZM)-UCF212-206D1	C(CM)-UCF212-206D1						
F212D1	—	C(CM)-UCF212-207D1						
F213D1	Z(ZM)-UCF213D1	C(CM)-UCF213D1	4	76	90	5.5	5.6	6.4
F213D1	Z(ZM)-UCF213-208D1	C(CM)-UCF213-208D1	5/32	3	3 17/32	12	12	14
F213D1	Z(ZM)-UCF213-209D1	C(CM)-UCF213-209D1						
F214D1	—	C(CM)-UCF214D1	4	—	98	6.3	—	7.4
F214D1		C(CM)-UCF214-210D1						
F214D1	—	C(CM)-UCF214-211D1	5/32	—	3 27/32	14	—	16
F214D1		C(CM)-UCF214-212D1						
F215D1	—	C(CM)-UCF215D1	4	—	102	6.6	—	7.9
F215D1		C(CM)-UCF215-213D1						
F215D1		C(CM)-UCF215-214D1	5/32	—	4 1/32	15	—	17
F215D1	—	C(CM)-UCF215-215D1						
F215D1		C(CM)-UCF215-300D1						
F216D1	—	C(CM)-UCF216D1	4	—	106	7.9	—	9.3
F216D1		C(CM)-UCF216-301D1						
F216D1	—	C(CM)-UCF216-302D1	5/32	—	4 3/16	17	—	21
F216D1		C(CM)-UCF216-303D1						

Square flanged unit, cast housing
Set screw type

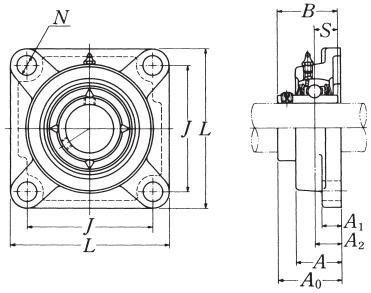

Shaft dia. mm / inch	Unit number (1)	Nominal dimensions mm inch L	J	A_2	A_1	A	N	A_0	B	S	Bolt size mm / inch	Bearing number
85	**UCF217D1**	220	175	36	24	63	23	87.6	85.7	34.1	M20	UC217D1
3 1/4	**UCF217-304D1**											UC217-304D1
3 5/16	**UCF217-305D1**	8 21/32	6 57/64	1 27/64	15/16	2 15/32	29/32	3 29/64	3.3740	1.343	3/4	UC217-305D1
3 7/16	**UCF217-307D1**											UC217-307D1
90	**UCF218D1**	235	187	40	24	68	23	96.3	96	39.7	M20	UC218D1
3 1/2	**UCF218-308D1**	9 1/4	7 23/64	1 37/64	15/16	2 11/16	29/32	3 51/64	3.7795	1.563	3/4	UC218-308D1

Note (1) These numbers indicate relubricatable type. If maintenance free type is needed, please order without suffix "D1".
Remarks Please refer to page **A21** for size of grease fitting.

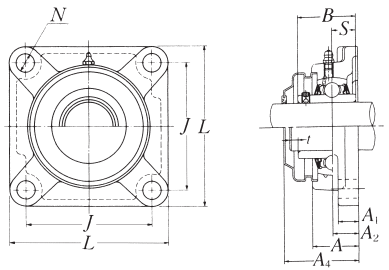

Pressed steel dust cover type
Open end **Z-UCF…D1**
Closed end **ZM-UCF…D1**

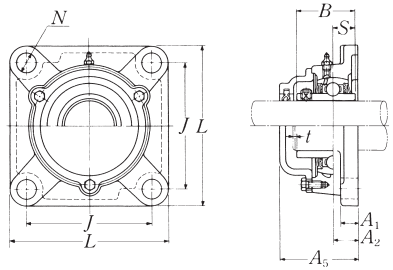

Cast dust cover type
Open end **C-UCF…D1**
Closed end **CM-UCF…D1**

Housing number	Unit number (1) pressed steel dust cover type	Unit number (1) cast dust cover type	Nominal dimensions mm inch t max.	A_4	A_5	Mass of unit kg lb UCF	Z(ZM)	C(CM)
F217D1	–	**C(CM)-UCF217D1**	5	–	114	9.8	–	12
F217D1		**C(CM)-UCF217-304D1**						
F217D1	–	**C(CM)-UCF217-305D1**	13/64	–	4 1/2	22	–	26
F217D1		**C(CM)-UCF217-307D1**						
F218D1	–	**C(CM)-UCF218D1**	5	–	122	12	–	13
F218D1	–	**C(CM)-UCF218-308D1**	13/64	–	4 13/16	26	–	29

Square flanged unit, cast housing
Set screw type

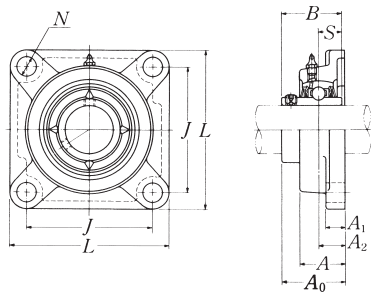

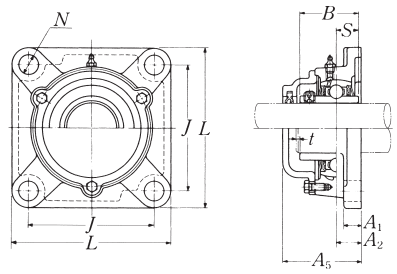

Cast dust cover type
Open end **C-UCF…D1**
Closed end **CM-UCF…D1**

Shaft dia. mm inch	Unit number (1)	Nominal dimensions mm inch L	J	A_2	A_1	A	N	A_0	B	S	Bolt size mm inch
25	UCF305D1	110	80	16	13	29	16	39	38	15	M14
13/16	UCF305-013D1										
7/8	UCF305-014D1	4 11/32	3 5/32	5/8	1/2	1 5/32	5/8	1 17/32	1.4961	0.591	1/2
15/16	UCF305-015D1										
1	UCF305-100D1										
30	UCF306D1	125	95	18	15	32	16	44	43	17	M14
1 1/16	UCF306-101D1										
1 1/8	UCF306-102D1	4 29/32	3 47/64	45/64	19/32	1 1/4	5/8	1 47/64	1.6929	0.669	1/2
1 3/16	UCF306-103D1										
35	UCF307D1	135	100	20	16	36	19	49	48	19	M16
1 1/4	UCF307-104D1										
1 5/16	UCF307-105D1	5 5/16	3 15/16	25/32	5/8	1 13/32	3/4	1 59/64	1.8898	0.748	5/8
1 3/8	UCF307-106D1										
1 7/16	UCF307-107D1										
40	UCF308D1	150	112	23	17	40	19	56	52	19	M16
1 1/2	UCF308-108D1	5 29/32	4 13/32	29/32	21/32	1 9/16	3/4	2 13/64	2.0472	0.748	5/8
1 9/16	UCF308-109D1										
45	UCF309D1	160	125	25	18	44	19	60	57	22	M16
1 5/8	UCF309-110D1										
1 11/16	UCF309-111D1	6 5/16	4 59/64	63/64	23/32	1 23/32	3/4	2 23/64	2.2441	0.866	5/8
1 3/4	UCF309-112D1										
50	UCF310D1	175	132	28	19	48	23	67	61	22	M20
1 13/16	UCF310-113D1										
1 7/8	UCF310-114D1	6 7/8	5 13/64	1 7/64	3/4	1 7/8	29/32	2 41/64	2.4016	0.866	3/4
1 15/16	UCF310-115D1										
55	UCF311D1	185	140	30	20	52	23	71	66	25	M20
2	UCF311-200D1										
2 1/16	UCF311-201D1	7 9/32	5 33/64	1 3/16	25/32	2 1/16	29/32	2 51/64	2.5984	0.984	3/4
2 1/8	UCF311-202D1										
2 3/16	UCF311-203D1										

Bearing number	Housing number	Unit number (1) cast dust cover type	Nominal dimensions mm inch t max.	A_5	Mass of unit kg lb UCF	C(CM)
UC305D1	F305D1	C(CM)-UCF305D1	2	56	1.1	1.4
UC305-013D1	F305D1	C(CM)-UCF305-013D1				
UC305-014D1	F305D1	C(CM)-UCF305-014D1	5/64	2 7/32	2.4	3.1
UC305-015D1	F305D1	C(CM)-UCF305-015D1				
UC305-100D1	F305D1	C(CM)-UCF305-100D1				
UC306D1	F306D1	C(CM)-UCF306D1	2	60	1.6	2.1
UC306-101D1	F306D1	C(CM)-UCF306-101D1				
UC306-102D1	F306D1	C(CM)-UCF306-102D1	5/64	2 3/8	3.5	4.6
UC306-103D1	F306D1	C(CM)-UCF306-103D1				
UC307D1	F307D1	C(CM)-UCF307D1	3	68	2.1	2.6
UC307-104D1	F307D1	C(CM)-UCF307-104D1				
UC307-105D1	F307D1	C(CM)-UCF307-105D1	1/8	2 11/16	4.6	5.7
UC307-106D1	F307D1	C(CM)-UCF307-106D1				
UC307-107D1	F307D1	C(CM)-UCF307-107D1				
UC308D1	F308D1	C(CM)-UCF308D1	3	76	2.7	3.4
UC308-108D1	F308D1	C(CM)-UCF308-108D1	1/8	3	6.0	7.5
UC308-109D1	F308D1	C(CM)-UCF308-109D1				
UC309D1	F309D1	C(CM)-UCF309D1	3	80	3.4	4.3
UC309-110D1	F309D1	C(CM)-UCF309-110D1				
UC309-111D1	F309D1	C(CM)-UCF309-111D1	1/8	3 5/32	7.5	9.5
UC309-112D1	F309D1	C(CM)-UCF309-112D1				
UC310D1	F310D1	C(CM)-UCF310D1	3	88	4.5	5.8
UC310-113D1	F310D1	C(CM)-UCF310-113D1				
UC310-114D1	F310D1	C(CM)-UCF310-114D1	1/8	3 15/32	9.9	13
UC310-115D1	F310D1	C(CM)-UCF310-115D1				
UC311D1	F311D1	C(CM)-UCF311D1	4	92	5.3	6.7
UC311-200D1	F311D1	C(CM)-UCF311-200D1				
UC311-201D1	F311D1	C(CM)-UCF311-201D1	5/32	3 5/8	12	15
UC311-202D1	F311D1	C(CM)-UCF311-202D1				
UC311-203D1	F311D1	C(CM)-UCF311-203D1				

Note (1) These numbers indicate relubricatable type. If maintenance free type is needed, please order without suffix "D1".
Remarks Please refer to page **A21** for size of grease fitting.

Square flanged unit, cast housing
Set screw type

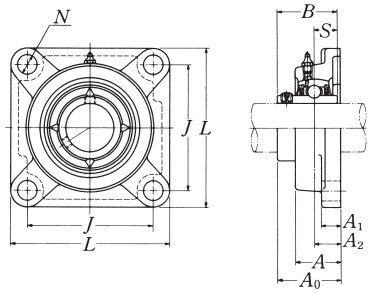

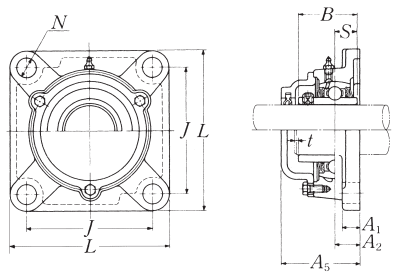

Cast dust cover type
Open end **C-UCF···D1**
Closed end **CM-UCF···D1**

Shaft dia. mm / inch	Unit number (1)	Nominal dimensions mm / inch L	J	A_2	A_1	A	N	A_0	B	S	Bolt size mm / inch
60	**UCF312D1**	195	150	33	22	56	23	78	71	26	M20
2 1/4	**UCF312-204D1**										
2 5/16	**UCF312-205D1**	7 11/16	5 29/32	1 19/64	7/8	2 7/32	29/32	3 5/64	2.7953	1.024	3/4
2 3/8	**UCF312-206D1**										
2 7/16	**UCF312-207D1**										
65	**UCF313D1**	208	166	33	22	58	23	78	75	30	M20
2 1/2	**UCF313-208D1**	8 3/16	6 17/32	1 19/64	7/8	2 9/32	29/32	3 5/64	2.9528	1.181	3/4
2 9/16	**UCF313-209D1**										
70	**UCF314D1**	226	178	36	25	61	25	81	78	33	M22
2 5/8	**UCF314-210D1**										
2 11/16	**UCF314-211D1**	8 29/32	6 1/64	1 27/64	31/32	2 13/32	63/64	3 3/16	3.0709	1.299	7/8
2 3/4	**UCF314-212D1**										
75	**UCF315D1**	236	184	39	25	66	25	89	82	32	M22
2 13/16	**UCF315-213D1**										
2 7/8	**UCF315-214D1**	9 9/32	7 1/4	1 17/32	31/32	2 19/32	63/64	3 1/2	3.2283	1.260	7/8
2 15/16	**UCF315-215D1**										
3	**UCF315-300D1**										
80	**UCF316D1**	250	196	38	27	68	31	90	86	34	M27
3 1/16	**UCF316-301D1**										
3 1/8	**UCF316-302D1**	9 27/32	7 23/32	1 1/2	1 1/16	2 11/16	1 7/32	3 35/64	3.3858	1.339	1
3 3/16	**UCF316-303D1**										
85	**UCF317D1**	260	204	44	27	74	31	100	96	40	M27
3 1/4	**UCF317-304D1**										
3 5/16	**UCF317-305D1**	10 1/4	8 1/32	1 47/64	1 1/16	2 29/32	1 7/32	3 15/16	3.7795	1.575	1
3 7/16	**UCF317-307D1**										
90	**UCF318D1**	280	216	44	30	76	35	100	96	40	M30
3 7/16	**UCF318-307D1**	11 1/32	8 1/2	1 47/64	1 3/16	3	1 3/8	3 15/16	3.7795	1.575	1 1/8
3 1/2	**UCF318-308D1**										

Note (1) These numbers indicate relubricatable type. If maintenance free type is needed, please order without suffix "D1".
Remarks Please refer to page **A21** for size of grease fitting.

Bearing number	Housing number	Unit number (1) cast dust cover type	Nominal dimensions mm / inch t max.	A_5	Mass of unit kg / lb UCF	C(CM)
UC312D1	F312D1	**C(CM)-UCF312D1**	4	100	6.3	7.8
UC312-204D1	F312D1	**C(CM)-UCF312-204D1**				
UC312-205D1	F312D1	**C(CM)-UCF312-205D1**	5/32	3 15/16	14	17
UC312-206D1	F312D1	**C(CM)-UCF312-206D1**				
UC312-207D1	F312D1	**C(CM)-UCF312-207D1**				
UC313D1	F313D1	**C(CM)-UCF313D1**	4	103	8.0	9.7
UC313-208D1	F313D1	**C(CM)-UCF313-208D1**	5/32	4 1/16	18	21
UC313-209D1	F313D1	**C(CM)-UCF313-209D1**				
UC314D1	F314D1	**C(CM)-UCF314D1**	4	106	9.4	11
UC314-210D1	F314D1	**C(CM)-UCF314-210D1**				
UC314-211D1	F314D1	**C(CM)-UCF314-211D1**	5/32	4 3/16	21	24
UC314-212D1	F314D1	**C(CM)-UCF314-212D1**				
UC315D1	F315D1	**C(CM)-UCF315D1**	4	114	11	13
UC315-213D1	F315D1	**C(CM)-UCF315-213D1**				
UC315-214D1	F315D1	**C(CM)-UCF315-214D1**	5/32	4 1/2	24	29
UC315-215D1	F315D1	**C(CM)-UCF315-215D1**				
UC315-300D1	F315D1	**C(CM)-UCF315-300D1**				
UC316D1	F316D1	**C(CM)-UCF316D1**	4	116	14	16
UC316-301D1	F316D1	**C(CM)-UCF316-301D1**				
UC316-302D1	F316D1	**C(CM)-UCF316-302D1**	5/32	4 9/16	31	35
UC316-303D1	F316D1	**C(CM)-UCF316-303D1**				
UC317D1	F317D1	**C(CM)-UCF317D1**	5	129	15	19
UC317-304D1	F317D1	**C(CM)-UCF317-304D1**				
UC317-305D1	F317D1	**C(CM)-UCF317-305D1**	13/64	5 3/32	33	42
UC317-307D1	F317D1	**C(CM)-UCF317-307D1**				
UC318D1	F318D1	**C(CM)-UCF318D1**	5	129	19	23
UC318-307D1	F318D1	**C(CM)-UCF318-307D1**	13/64	5 3/32	42	51
UC318-308D1	F318D1	**C(CM)-UCF318-308D1**				

Square flanged unit, cast housing
Set screw type

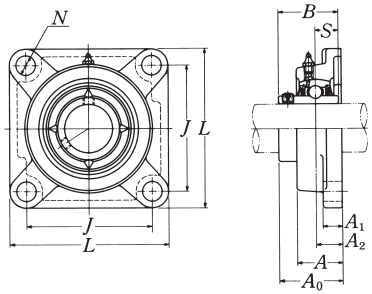

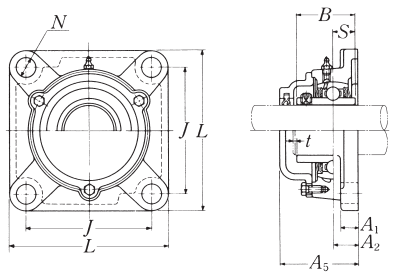

Cast dust cover type
Open end **C-UCF…D1**
Closed end **CM-UCF…D1**

Shaft dia. mm inch	Unit number (1)	Nominal dimensions mm inch L	J	A_2	A_1	A	N	A_0	B	S	Bolt size mm inch
95	UCF319D1	290	228	59	30	94	35	121	103	41	M30
3 5/8	UCF319-310D1										
3 11/16	UCF319-311D1	11 13/32	8 31/32	2 21/64	1 3/16	3 11/16	1 3/8	4 49/64	4.0551	1.614	1 1/8
3 3/4	UCF319-312D1										
100	UCF320D1	310	242	59	32	94	38	125	108	42	M33
3 13/16	UCF320-313D1										
3 7/8	UCF320-314D1	12 7/32	9 17/32	2 21/64	1 1/4	3 11/16	1 1/2	4 59/64	4.2520	1.654	1 1/4
3 15/16	UCF320-315D1										
4	UCF320-400D1										
105	UCF321D1	310	242	59	32	94	38	127	112	44	M33
110	UCF322D1	340	266	60	35	96	41	131	117	46	M36
120	UCF324D1	370	290	65	40	110	41	140	126	51	M36
130	UCF326D1	410	320	65	45	115	41	146	135	54	M36
140	UCF328D1	450	350	75	55	125	41	161	145	59	M36

Note (1) These numbers indicate relubricatable type. If maintenance free type is needed, please order without suffix "D1".
Remarks Please refer to page **A21** for size of grease fitting.

Bearing number	Housing number	Unit number (1) cast dust cover type	Nominal dimensions mm inch t max.	A_5	Mass of unit kg lb UCF	C(CM)
UC319D1	F319D1	C(CM)-UCF319D1	5	149	22	25
UC319-310D1	F319D1	C(CM)-UCF319-310D1				
UC319-311D1	F319D1	C(CM)-UCF319-311D1	13/64	5 7/8	49	55
UC319-312D1	F319D1	C(CM)-UCF319-312D1				
UC320D1	F320D1	C(CM)-UCF320D1	5	154	27	32
UC320-313D1	F320D1	C(CM)-UCF320-313D1				
UC320-314D1	F320D1	C(CM)-UCF320-314D1	13/64	6 1/16	60	71
UC320-315D1	F320D1	C(CM)-UCF320-315D1				
UC320-400D1	F320D1	C(CM)-UCF320-400D1				
UC321D1	F321D1	C(CM)-UCF321D1	5	156	26	32
UC322D1	F322D1	C(CM)-UCF322D1	5	160	34	40
UC324D1	F324D1	C(CM)-UCF324D1	5	172	48	56
UC326D1	F326D1	C(CM)-UCF326D1	6	178	63	73
UC328D1	F328D1	C(CM)-UCF328D1	6	192	90	100

Square flanged unit, cast housing
Set screw type

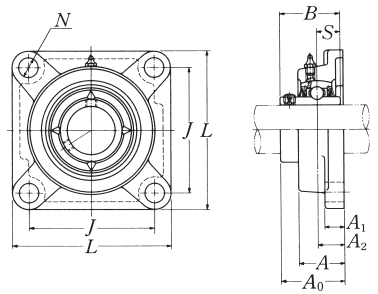

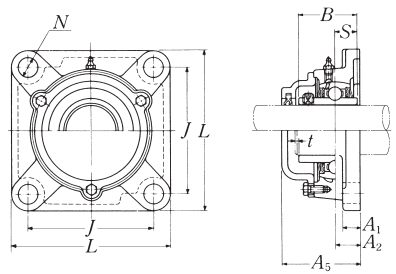

Cast dust cover type
Open end **C-UCF···D1**
Closed end **CM-UCF···D1**

Shaft dia. mm inch	Unit number (1)	Nominal dimensions mm inch L	J	A_2	A_1	A	N	A_0	B	S	Bolt size mm inch
25	UCFX05D1	108	83	18	13	30	12	40.2	38.1	15.9	M10
13/16	UCFX05-013D1										
7/8	UCFX05-014D1	4 1/4	3 17/64	45/64	1/2	1 3/16	15/32	1 37/64	1.5000	0.626	3/8
15/16	UCFX05-015D1										
1	UCFX05-100D1										
30	UCFX06D1	117	92	19	14	34	16	44.4	42.9	17.5	M14
1 1/16	UCFX06-101D1										
1 1/8	UCFX06-102D1	4 19/32	3 5/8	3/4	9/16	1 11/32	5/8	1 3/4	1.6890	0.689	1/2
1 3/16	UCFX06-103D1										
1 1/4	UCFX06-104D1										
35	UCFX07D1	130	102	21	14	38	16	51.2	49.2	19	M14
1 5/16	UCFX07-105D1										
1 3/8	UCFX07-106D1	5 1/8	4 1/64	53/64	9/16	1 1/2	5/8	2 1/64	1.9370	0.748	1/2
1 7/16	UCFX07-107D1										
40	UCFX08D1	137	105	22	14	40	19	52.2	49.2	19	M16
1 1/2	UCFX08-108D1	5 13/32	4 9/64	55/64	9/16	1 9/16	3/4	2 1/16	1.9370	0.748	5/8
1 9/16	UCFX08-109D1										
45	UCFX09D1	143	111	23	14	40	19	55.6	51.6	19	M16
1 5/8	UCFX09-110D1										
1 11/16	UCFX09-111D1	5 5/8	4 3/8	29/32	9/16	1 9/16	3/4	2 3/16	2.0315	0.748	5/8
1 3/4	UCFX09-112D1										
1 13/16	UCFX09-113D1										
50	UCFX10D1	162	130	26	20	44	19	59.4	55.6	22.2	M16
1 7/8	UCFX10-114D1										
1 15/16	UCFX10-115D1	6 3/8	5 1/8	1 1/32	25/32	1 23/32	3/4	2 11/32	2.1890	0.874	5/8
2	UCFX10-200D1										

Note (1) These numbers indicate relubricatable type. If maintenance free type is needed, please order without suffix "D1".
Remarks Please refer to page **A21** for size of grease fitting.

Bearing number	Housing number	Unit number (1) cast dust cover type	Nominal dimensions mm inch t max.	A_5	Mass of unit kg lb UCF	C(CM)
UCX05D1	FX05D1	C(CM)-UCFX05D1	2	56	1.1	1.3
UCX05-013D1	FX05D1	C(CM)-UCFX05-013D1				
UCX05-014D1	FX05D1	C(CM)-UCFX05-014D1	5/64	2 7/32	2.4	2.9
UCX05-015D1	FX05D1	C(CM)-UCFX05-015D1				
UCX05-100D1	FX05D1	C(CM)-UCFX05-100D1				
UCX06D1	FX06D1	C(CM)-UCFX06D1	2	59	1.7	1.9
UCX06-101D1	FX06D1	C(CM)-UCFX06-101D1				
UCX06-102D1	FX06D1	C(CM)-UCFX06-102D1	5/64	2 5/16	3.7	4.2
UCX06-103D1	FX06D1	C(CM)-UCFX06-103D1				
UC207-104D1	FX06D1	C(CM)-UCFX06-104D1				
UCX07D1	FX07D1	C(CM)-UCFX07D1	3	66	2.1	2.5
UCX07-105D1	FX07D1	C(CM)-UCFX07-105D1				
UCX07-106D1	FX07D1	C(CM)-UCFX07-106D1	1/8	2 19/32	4.6	5.5
UCX07-107D1	FX07D1	C(CM)-UCFX07-107D1				
UCX08D1	FX08D1	C(CM)-UCFX08D1	3	70	2.3	2.7
UCX08-108D1	FX08D1	C(CM)-UCFX08-108D1	1/8	2 3/4	5.1	6.0
UCX08-109D1	FX08D1	C(CM)-UCFX08-109D1				
UCX09D1	FX09D1	C(CM)-UCFX09D1	3	73	2.5	3.0
UCX09-110D1	FX09D1	C(CM)-UCFX09-110D1				
UCX09-111D1	FX09D1	C(CM)-UCFX09-111D1	1/8	2 7/8	5.5	6.6
UCX09-112D1	FX09D1	C(CM)-UCFX09-112D1				
UC210-113D1	FX09D1	C(CM)-UCFX09-113D1				
UCX10D1	FX10D1	C(CM)-UCFX10D1	3	76	3.8	4.3
UCX10-114D1	FX10D1	C(CM)-UCFX10-114D1				
UCX10-115D1	FX10D1	C(CM)-UCFX10-115D1	1/8	3	8.4	9.5
UC211-200D1	FX10D1	C(CM)-UCFX10-200D1				

Square flanged unit, cast housing
Set screw type

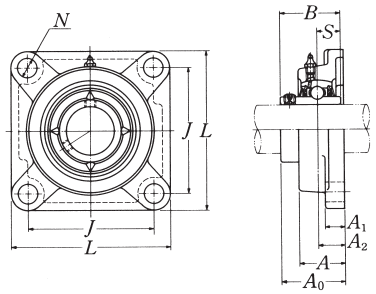

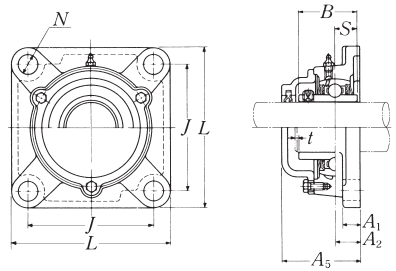

Cast dust cover type
Open end **C-UCF…D1**
Closed end **CM-UCF…D1**

Shaft dia. mm / inch	Unit number (1)	Nominal dimensions mm / inch L	J	A_2	A_1	A	N	A_0	B	S	Bolt size mm / inch
55	**UCFX11D1**	175	143	29	20	49	19	68.7	65.1	25.4	M16
2 1/16	**UCFX11-201D1**										
2 1/8	**UCFX11-202D1**										
2 3/16	**UCFX11-203D1**	6 7/8	5 5/8	1 9/64	25/32	1 15/16	3/4	2 45/64	2.5630	1.000	5/8
2 1/4	**UCFX11-204D1**										
2 5/16	**UCFX11-205D1**										
60	**UCFX12D1**	187	149	34	21	59	19	73.7	65.1	25.4	M16
2 3/8	**UCFX12-206D1**	7 3/8	5 55/64	1 11/32	13/16	2 5/16	3/4	2 29/32	2.5630	1.000	5/8
2 7/16	**UCFX12-207D1**										
65	**UCFX13D1**	187	149	34	21	59	19	78.4	74.6	30.2	M16
2 1/2	**UCFX13-208D1**	7 3/8	5 55/64	1 11/32	13/16	2 5/16	3/4	3 3/32	2.9370	1.189	5/8
2 9/16	**UCFX13-209D1**										
70	**UCFX14D1**	197	152	37	24	60	23	81.5	77.8	33.3	M20
2 5/8	**UCFX14-210D1**										
2 11/16	**UCFX14-211D1**	7 3/4	5 63/64	1 29/64	15/16	2 3/8	29/32	3 13/64	3.0630	1.311	3/4
2 3/4	**UCFX14-212D1**										
75	**UCFX15D1**	197	152	40	24	68	23	89.3	82.6	33.3	M20
2 13/16	**UCFX15-213D1**										
2 7/8	**UCFX15-214D1**	7 3/4	5 63/64	1 37/64	15/16	2 11/16	29/32	3 33/64	3.2520	1.311	3/4
2 15/16	**UCFX15-215D1**										
3	**UCFX15-300D1**										
80	**UCFX16D1**	214	171	40	24	70	23	91.6	85.7	34.1	M20
3 1/16	**UCFX16-301D1**										
3 1/8	**UCFX16-302D1**	8 7/16	6 47/64	1 37/64	15/16	2 3/4	29/32	3 39/64	3.3740	1.343	3/4
3 3/16	**UCFX16-303D1**										
3 1/4	**UCFX16-304D1**										

Note (1) These numbers indicate relubricatable type. If maintenance free type is needed, please order without suffix "D1".
Remarks Please refer to page **A21** for size of grease fitting.

Bearing number	Housing number	Unit number (1) cast dust cover type	Nominal dimensions mm / inch t max.	A_5	Mass of unit kg / lb UCF	C(CM)
UCX11D1	FX11D1	**C(CM)-UCFX11D1**	4	86	4.8	5.5
UCX11-201D1	FX11D1	**C(CM)-UCFX11-201D1**				
UCX11-202D1	FX11D1	**C(CM)-UCFX11-202D1**				
UCX11-203D1	FX11D1	**C(CM)-UCFX11-203D1**	5/32	3 3/8	11	12
UC212-204D1	FX11D1	**C(CM)-UCFX11-204D1**				
UC212-205D1	FX11D1	**C(CM)-UCFX11-205D1**				
UCX12D1	FX12D1	**C(CM)-UCFX12D1**	4	94	6.4	7.3
UCX12-206D1	FX12D1	**C(CM)-UCFX12-206D1**	5/32	3 11/16	14	16
UCX12-207D1	FX12D1	**C(CM)-UCFX12-207D1**				
UCX13D1	FX13D1	**C(CM)-UCFX13D1**	4	101	6.7	7.8
UCX13-208D1	FX13D1	**C(CM)-UCFX13-208D1**	5/32	3 31/32	15	17
UCX13-209D1	FX13D1	**C(CM)-UCFX13-209D1**				
UCX14D1	FX14D1	**C(CM)-UCFX14D1**	4	105	7.1	8.3
UCX14-210D1	FX14D1	**C(CM)-UCFX14-210D1**				
UCX14-211D1	FX14D1	**C(CM)-UCFX14-211D1**	5/32	4 1/8	16	18
UCX14-212D1	FX14D1	**C(CM)-UCFX14-212D1**				
UCX15D1	FX15D1	**C(CM)-UCFX15D1**	4	112	8.6	9.9
UCX15-213D1	FX15D1	**C(CM)-UCFX15-213D1**				
UCX15-214D1	FX15D1	**C(CM)-UCFX15-214D1**	5/32	4 13/32	19	22
UCX15-215D1	FX15D1	**C(CM)-UCFX15-215D1**				
UCX15-300D1	FX15D1	**C(CM)-UCFX15-300D1**				
UCX16D1	FX16D1	**C(CM)-UCFX16D1**	4	118	11	12
UCX16-301D1	FX16D1	**C(CM)-UCFX16-301D1**				
UCX16-302D1	FX16D1	**C(CM)-UCFX16-302D1**	5/32	4 21/32	24	26
UCX16-303D1	FX16D1	**C(CM)-UCFX16-303D1**				
UC217-304D1	FX16D1	**C(CM)-UCFX16-304D1**				

Square flanged unit, cast housing
Set screw type

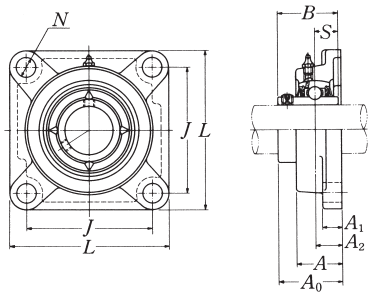

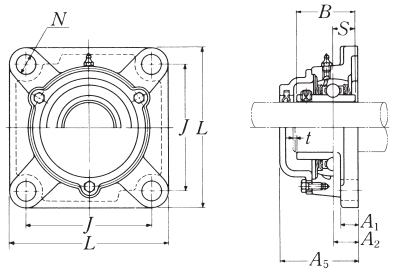

Cast dust cover type
Open end **C-UCF···D1**
Closed end **CM-UCF···D1**

Shaft dia. mm / inch	Unit number (1)	Nominal dimensions mm / inch L	J	A_2	A_1	A	N	A_0	B	S	Bolt size mm / inch
85	**UCFX17D1**	214	171	40	24	70	23	96.3	96	39.7	M20
3 5/16	**UCFX17-305D1**	8 7/16	6 47/64	1 37/64	15/16	2 3/4	29/32	3 51/64	3.7795	1.563	3/4
3 7/16	**UCFX17-307D1**										
90	**UCFX18D1**	214	171	45	24	76	23	106.1	104	42.9	M20
3 7/16	**UCFX18-307D1**	8 7/16	6 47/64	1 49/64	15/16	3	29/32	4 11/64	4.0945	1.689	3/4
3 1/2	**UCFX18-308D1**										
100	**UCFX20D1**	268	211	59	31	97	31	127.3	117.5	49.2	M27
3 13/16	**UCFX20-313D1**	10 9/16	8 5/16	2 21/64	1 7/32	3 13/16	1 7/32	5 1/64	4.6260	1.937	1
3 7/8	**UCFX20-314D1**										
3 15/16	**UCFX20-315D1**										
4	**UCFX20-400D1**										

Bearing number	Housing number	Unit number (1) cast dust cover type	Nominal dimensions mm / inch t max.	A_5	Mass of unit kg / lb UCF	C(CM)
UCX17D1	FX17D1	**C(CM)-UCFX17D1**	5	122	12	14
UCX17-305D1	FX17D1	**C(CM)-UCFX17-305D1**	13/64	4 13/16	26	31
UCX17-307D1	FX17D1	**C(CM)-UCFX17-307D1**				
UCX18D1	FX18D1	**C(CM)-UCFX18D1**	5	135	13	15
UCX18-307D1	FX18D1	**C(CM)-UCFX18-307D1**	13/64	5 5/16	29	33
UCX18-308D1	FX18D1	**C(CM)-UCFX18-308D1**				
UCX20D1	FX20D1	**C(CM)-UCFX20D1**	5	146.5	21	23
UCX20-313D1	FX20D1	**C(CM)-UCFX20-313D1**	13/64	5 25/32	46	51
UCX20-314D1	FX20D1	**C(CM)-UCFX20-314D1**				
UCX20-315D1	FX20D1	**C(CM)-UCFX20-315D1**				
UCX20-400D1	FX20D1	**C(CM)-UCFX20-400D1**				

Note (1) These numbers indicate relubricatable type. If maintenance free type is needed, please order without suffix "D1".
Remarks Please refer to page **A21** for size of grease fitting.

Square flanged unit, cast housing with spigot joint
Set screw type

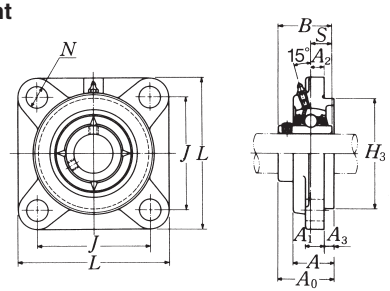

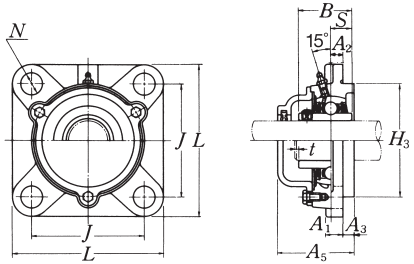

Cast dust cover type
Open end **C-UCFS···D1**
Closed end **CM-UCFS···D1**

Shaft dia. mm / inch	Unit number (1)	Nominal dimensions mm / inch L	J	A_2	N	A_3	A_1	A	H_3	A_0	B	S	Bolt size mm / inch
25	**UCFS305D1**	110	80	9	16	7	13	29	80	39	38	15	M14
13/16	**UCFS305-013D1**												
7/8	**UCFS305-014D1**	4 11/32	3 5/32	23/64	5/8	9/32	1/2	1 9/64	3.1496	1 17/32	1.4961	0.591	1/2
15/16	**UCFS305-015D1**												
1	**UCFS305-100D1**												
30	**UCFS306D1**	125	95	10	16	8	15	32	90	44	43	17	M14
1 1/16	**UCFS306-101D1**												
1 1/8	**UCFS306-102D1**	4 29/32	3 47/64	25/64	5/8	5/16	19/32	1 17/64	3.5433	1 47/64	1.6929	0.669	1/2
1 3/16	**UCFS306-103D1**												
35	**UCFS307D1**	135	100	11	19	9	16	36	100	49	48	19	M16
1 1/4	**UCFS307-104D1**												
1 5/16	**UCFS307-105D1**	5 5/16	3 15/16	7/16	3/4	23/64	5/8	1 13/32	3.9370	1 59/64	1.8898	0.748	5/8
1 3/8	**UCFS307-106D1**												
1 7/16	**UCFS307-107D1**												
40	**UCFS308D1**	150	112	13	19	10	17	40	115	56	52	19	M16
1 1/2	**UCFS308-108D1**	5 29/32	4 13/32	33/64	3/4	25/64	21/32	1 9/16	4.5276	2 13/64	2.0472	0.748	5/8
1 9/16	**UCFS308-109D1**												
45	**UCFS309D1**	160	125	14	19	11	18	44	125	60	57	22	M16
1 5/8	**UCFS309-110D1**												
1 11/16	**UCFS309-111D1**	6 5/16	4 59/64	35/64	3/4	7/16	23/32	1 47/64	4.9213	2 23/64	2.2441	0.866	5/8
1 3/4	**UCFS309-112D1**												
50	**UCFS310D1**	175	132	16	23	12	19	48	140	67	61	22	M20
1 13/16	**UCFS310-113D1**												
1 7/8	**UCFS310-114D1**	6 7/8	5 13/64	5/8	29/32	15/32	3/4	1 57/64	5.5118	2 41/64	2.4016	0.866	3/4
1 15/16	**UCFS310-115D1**												

Note (1) These numbers indicate relubricatable type. If maintenance free type is needed, please order without suffix "D1".
Remarks Please refer to page **A21** for size of grease fitting.

Bearing number	Housing number	Unit number (1) cast dust cover type	Nominal dimensions mm / inch t max.	A_5	Mass of unit kg / lb UCFS	C(CM)
UC305D1	FS305D1	**C(CM)-UCFS305D1**	2	56	1.2	1.4
UC305-013D1	FS305D1	**C(CM)-UCFS305-013D1**				
UC305-014D1	FS305D1	**C(CM)-UCFS305-014D1**	5/64	2 13/64	2.6	3.1
UC305-015D1	FS305D1	**C(CM)-UCFS305-015D1**				
UC305-100D1	FS305D1	**C(CM)-UCFS305-100D1**				
UC306D1	FS306D1	**C(CM)-UCFS306D1**	2	60	1.8	2.2
UC306-101D1	FS306D1	**C(CM)-UCFS306-101D1**				
UC306-102D1	FS306D1	**C(CM)-UCFS306-102D1**	5/64	2 23/64	4.0	4.9
UC306-103D1	FS306D1	**C(CM)-UCFS306-103D1**				
UC307D1	FS307D1	**C(CM)-UCFS307D1**	3	67	2.3	2.8
UC307-104D1	FS307D1	**C(CM)-UCFS307-104D1**				
UC307-105D1	FS307D1	**C(CM)-UCFS307-105D1**	1/8	2 41/64	5.1	6.2
UC307-106D1	FS307D1	**C(CM)-UCFS307-106D1**				
UC307-107D1	FS307D1	**C(CM)-UCFS307-107D1**				
UC308D1	FS308D1	**C(CM)-UCFS308D1**	3	76	3.1	3.6
UC308-108D1	FS308D1	**C(CM)-UCFS308-108D1**	1/8	2 63/64	6.8	7.9
UC308-109D1	FS308D1	**C(CM)-UCFS308-109D1**				
UC309D1	FS309D1	**C(CM)-UCFS309D1**	3	80	3.8	4.7
UC309-110D1	FS309D1	**C(CM)-UCFS309-110D1**				
UC309-111D1	FS309D1	**C(CM)-UCFS309-111D1**	1/8	3 5/32	8.4	10
UC309-112D1	FS309D1	**C(CM)-UCFS309-112D1**				
UC310D1	FS310D1	**C(CM)-UCFS310D1**	3	88	5.0	6.2
UC310-113D1	FS310D1	**C(CM)-UCFS310-113D1**				
UC310-114D1	FS310D1	**C(CM)-UCFS310-114D1**	1/8	3 15/32	11	14
UC310-115D1	FS310D1	**C(CM)-UCFS310-115D1**				

Square flanged unit, cast housing with spigot joint
Set screw type

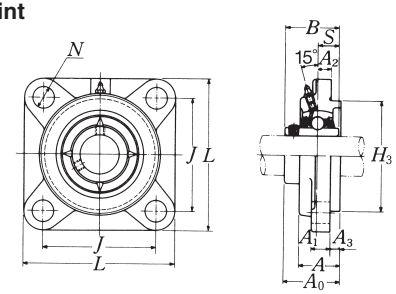

Shaft dia. mm inch	Unit number (1)	Nominal dimensions mm inch L	J	A_2	N	A_3	A_1	A	H_3	A_0	B	S	Bolt size mm inch
55	UCFS311D1	185	140	17	23	13	20	52	150	71	66	25	M20
2	UCFS311-200D1												
2 1/16	UCFS311-201D1	7 9/32	5 33/64	43/64	29/32	33/64	25/32	2 3/64	5.9055	2 51/64	2.5984	0.984	3/4
2 1/8	UCFS311-202D1												
2 3/16	UCFS311-203D1												
60	UCFS312D1	195	150	19	23	14	22	56	160	78	71	26	M20
2 1/4	UCFS312-204D1												
2 5/16	UCFS312-205D1	7 11/16	5 29/32	3/4	29/32	35/64	7/8	2 13/64	6.2992	3 5/64	2.7953	1.024	3/4
2 3/8	UCFS312-206D1												
2 7/16	UCFS312-207D1												
65	UCFS313D1	208	166	15	23	18	22	58	175	78	75	30	M20
2 1/2	UCFS313-208D1	8 3/16	6 17/32	19/32	29/32	45/64	7/8	2 9/32	6.8898	3 5/64	2.9528	1.181	3/4
2 9/16	UCFS313-209D1												
70	UCFS314D1	226	178	18	25	18	25	61	185	81	78	33	M22
2 5/8	UCFS314-210D1												
2 11/16	UCFS314-211D1	8 29/32	7 1/64	45/64	63/64	45/64	31/32	2 13/32	7.2835	3 3/16	3.0709	1.299	7/8
2 3/4	UCFS314-212D1												
75	UCFS315D1	236	184	21	25	18	25	66	200	89	82	32	M22
2 13/16	UCFS315-213D1												
2 7/8	UCFS315-214D1	9 9/32	7 1/4	53/64	63/64	45/64	31/32	2 19/32	7.8740	3 1/2	3.2283	1.260	7/8
2 15/16	UCFS315-215D1												
3	UCFS315-300D1												
80	UCFS316D1	250	196	18	31	20	27	68	210	90	86	34	M27
3 1/16	UCFS316-301D1												
3 1/8	UCFS316-302D1	9 27/32	7 23/32	45/64	1 7/32	25/32	1 1/16	2 43/64	8.2677	3 35/64	3.3858	1.339	1
3 3/16	UCFS316-303D1												

Note (1) These numbers indicate relubricatable type. If maintenance free type is needed, please order without suffix "D1".
Remarks Please refer to page **A21** for size of grease fitting.

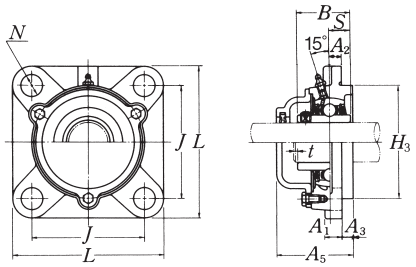

Cast dust cover type
Open end **C-UCFS···D1**
Closed end **CM-UCFS···D1**

Bearing number	Housing number	Unit number (1) cast dust cover type	Nominal dimensions mm inch t max.	A_5	Mass of unit kg lb UCFS	C(CM)
UC311D1	FS311D1	C(CM)-UCFS311D1	4	93	5.9	7.2
UC311-200D1	FS311D1	C(CM)-UCFS311-200D1				
UC311-201D1	FS311D1	C(CM)-UCFS311-201D1	5/32	3 21/32	13	16
UC311-202D1	FS311D1	C(CM)-UCFS311-202D1				
UC311-203D1	FS311D1	C(CM)-UCFS311-203D1				
UC312D1	FS312D1	C(CM)-UCFS312D1	4	100	7.0	8.4
UC312-204D1	FS312D1	C(CM)-UCFS312-204D1				
UC312-205D1	FS312D1	C(CM)-UCFS312-205D1	5/32	3 15/16	15	19
UC312-206D1	FS312D1	C(CM)-UCFS312-206D1				
UC312-207D1	FS312D1	C(CM)-UCFS312-207D1				
UC313D1	FS313D1	C(CM)-UCFS313D1	4	103	8.6	10
UC313-208D1	FS313D1	C(CM)-UCFS313-208D1	5/32	4 1/16	19	22
UC313-209D1	FS313D1	C(CM)-UCFS313-209D1				
UC314D1	FS314D1	C(CM)-UCFS314D1	4	106	10	12
UC314-210D1	FS314D1	C(CM)-UCFS314-210D1				
UC314-211D1	FS314D1	C(CM)-UCFS314-211D1	5/32	4 11/64	22	26
UC314-212D1	FS314D1	C(CM)-UCFS314-212D1				
UC315D1	FS315D1	C(CM)-UCFS315D1	4	114	12	14
UC315-213D1	FS315D1	C(CM)-UCFS315-213D1				
UC315-214D1	FS315D1	C(CM)-UCFS315-214D1	5/32	4 31/64	26	31
UC315-215D1	FS315D1	C(CM)-UCFS315-215D1				
UC315-300D1	FS315D1	C(CM)-UCFS315-300D1				
UC316D1	FS316D1	C(CM)-UCFS316D1	4	116	14	17
UC316-301D1	FS316D1	C(CM)-UCFS316-301D1				
UC316-302D1	FS316D1	C(CM)-UCFS316-302D1	5/32	4 9/16	31	37
UC316-303D1	FS316D1	C(CM)-UCFS316-303D1				

Square flanged unit, cast housing with spigot joint
Set screw type

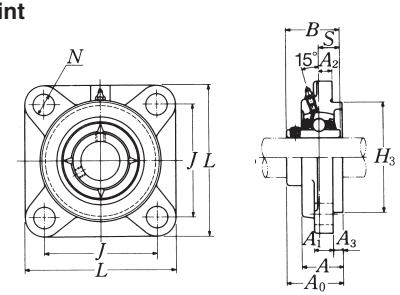

Shaft dia. mm / inch	Unit number (1)	Nominal dimensions mm inch L	J	A_2	N	A_3	A_1	A	H_3	A_0	B	S	Bolt size mm / inch
85	UCFS317D1	260	204	24	31	20	27	74	220	100	96	40	M27
3 1/4	UCFS317-304D1												
3 5/16	UCFS317-305D1	10 1/4	8 1/32	15/16	1 7/32	25/32	1 1/16	2 29/32	8.6614	3 15/16	3.7795	1.575	1
3 7/16	UCFS317-307D1												
90	UCFS318D1	280	216	24	35	20	30	76	240	100	96	40	M30
3 7/16	UCFS318-307D1	11 1/32	8 1/2	15/16	1 3/8	25/32	1 3/16	2 63/64	9.4488	3 15/16	3.7795	1.575	1 1/8
3 1/2	UCFS318-308D1												
95	UCFS319D1	290	228	39	35	20	30	94	250	121	103	41	M30
3 5/8	UCFS319-310D1												
3 11/16	UCFS319-311D1	11 13/32	8 31/32	1 17/32	1 3/8	25/32	1 3/16	3 45/64	9.8425	4 49/64	4.0551	1.614	1 1/8
3 3/4	UCFS319-312D1												
100	UCFS320D1	310	242	39	38	20	32	94	260	125	108	42	M33
3 13/16	UCFS320-313D1												
3 7/8	UCFS320-314D1	12 7/32	9 17/32	1 17/32	1 1/2	25/32	1 1/4	3 45/64	10.2362	4 59/64	4.2520	1.654	1 1/4
3 15/16	UCFS320-315D1												
4	UCFS320-400D1												
105	UCFS321D1	310	242	39	38	20	32	94	260	127	112	44	M33
110	UCFS322D1	340	266	35	41	25	35	96	300	131	117	46	M36
120	UCFS324D1	370	290	35	41	30	40	110	330	140	126	51	M36
130	UCFS326D1	410	320	35	41	30	45	115	360	146	135	54	M36
140	UCFS328D1	450	350	45	41	30	55	125	400	161	145	59	M36

Note (1) These numbers indicate relubricatable type. If maintenance free type is needed, please order without suffix "D1".
Remarks Please refer to page **A21** for size of grease fitting.

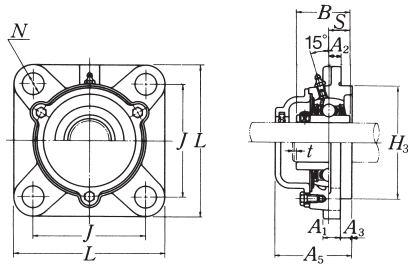

Cast dust cover type
Open end **C-UCFS···D1**
Closed end **CM-UCFS···D1**

Bearing number	Housing number	Unit number (1) cast dust cover type	Nominal dimensions mm inch t max.	A_5	Mass of unit kg lb UCFS	C(CM)
UC317D1	FS317D1	C(CM)-UCFS317D1	5	129	17	20
UC317-304D1	FS317D1	C(CM)-UCFS317-304D1				
UC317-305D1	FS317D1	C(CM)-UCFS317-305D1	13/64	5 5/64	37	44
UC317-307D1	FS317D1	C(CM)-UCFS317-307D1				
UC318D1	FS318D1	C(CM)-UCFS318D1	5	129	20	24
UC318-307D1	FS318D1	C(CM)-UCFS318-307D1	13/64	5 5/64	44	53
UC318-308D1	FS318D1	C(CM)-UCFS318-308D1				
UC319D1	FS319D1	C(CM)-UCFS319D1	5	149	24	28
UC319-310D1	FS319D1	C(CM)-UCFS319-310D1				
UC319-311D1	FS319D1	C(CM)-UCFS319-311D1	13/64	5 55/64	53	62
UC319-312D1	FS319D1	C(CM)-UCFS319-312D1				
UC320D1	FS320D1	C(CM)-UCFS320D1	5	154	29	34
UC320-313D1	FS320D1	C(CM)-UCFS320-313D1				
UC320-314D1	FS320D1	C(CM)-UCFS320-314D1	13/64	6 1/16	64	75
UC320-315D1	FS320D1	C(CM)-UCFS320-315D1				
UC320-400D1	FS320D1	C(CM)-UCFS320-400D1				
UC321D1	FS321D1	C(CM)-UCFS321D1	5	156	28	33
UC322D1	FS322D1	C(CM)-UCFS322D1	5	160	38	45
UC324D1	FS324D1	C(CM)-UCFS324D1	5	172	52	59
UC326D1	FS326D1	C(CM)-UCFS326D1	6	178	69	77
UC328D1	FS328D1	C(CM)-UCFS328D1	6	192	98	109

Round flanged unit, cast housing with spigot joint
Set screw type

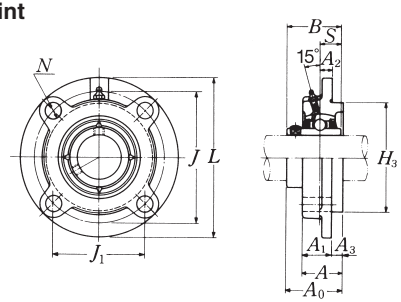

Shaft dia. mm / inch	Unit number (1)	Nominal dimensions mm / inch L	J	(J_1)	A_2	N	A_3	A_1	A	H_3	A_0	B	S	Bolt size mm / inch
12	UCFC201D1	100	78	55.2	10	12	5	20.5	25.5	62	33.3	31	12.7	M10
1/2	UCFC201-008D1	3 15/16	3 5/64	2 11/64	25/64	15/32	13/64	13/16	1	2.4409	1 15/16	1.2205	0.500	3/8
15	UCFC202D1	100	78	55.2	10	12	5	20.5	25.5	62	33.3	31	12.7	M10
9/16	UCFC202-009D1	3 15/16	3 5/64	2 11/64	25/64	15/32	13/64	13/16	1	2.4409	1 5/16	1.2205	0.500	3/8
5/8	UCFC202-010D1													
17	UCFC203D1	100	78	55.2	10	12	5	20.5	25.5	62	33.3	31	12.7	M10
11/16	UCFC203-011D1	3 15/16	3 5/64	2 11/64	25/64	15/32	13/64	13/16	1	2.4409	1 5/16	1.2205	0.500	3/8
20	UCFC204D1	100	78	55.2	10	12	5	20.5	25.5	62	33.3	31	12.7	M10
3/4	UCFC204-012D1	3 15/16	3 5/64	2 11/64	25/64	15/32	13/64	13/16	1	2.4409	1 5/16	1.2205	0.500	3/8
25	UCFC205D1	115	90	63.6	10	12	6	21	27	70	35.8	34.1	14.3	M10
13/16	UCFC205-013D1	4 17/32	3 35/64	2 1/2	25/64	15/32	15/64	13/16	1 1/16	2.7559	1 13/32	1.3425	0.563	3/8
7/8	UCFC205-014D1													
15/16	UCFC205-015D1													
1	UCFC205-100D1													
30	UCFC206D1	125	100	70.7	10	12	8	23	31	80	40.2	38.1	15.9	M10
1 1/16	UCFC206-101D1	4 29/32	3 15/16	2 25/32	25/64	15/32	5/16	29/32	1 7/32	3.1496	1 37/64	1.5000	0.629	3/8
1 1/8	UCFC206-102D1													
1 3/16	UCFC206-103D1													
1 1/4	UCFC206-104D1													
35	UCFC207D1	135	110	77.8	11	14	8	26	34	90	44.4	42.9	17.5	M12
1 1/4	UCFC207-104D1	5 5/16	4 21/64	3 1/16	7/16	35/64	5/16	1 1/32	1 11/32	3.5433	1 3/4	1.6890	0.689	7/16
1 5/16	UCFC207-105D1													
1 3/8	UCFC207-106D1													
1 7/16	UCFC207-107D1													
40	UCFC208D1	145	120	84.9	11	14	10	26	36	100	51.2	49.2	19	M12
1 1/2	UCFC208-108D1	5 23/32	4 23/32	3 11/32	7/16	35/64	25/64	1 1/32	1 27/64	3.9370	2 1/64	1.9370	0.748	7/16
1 9/16	UCFC208-109D1													
45	UCFC209D1	160	132	93.3	10	16	12	26	38	105	52.2	49.2	19	M14
1 5/8	UCFC209-110D1	6 5/16	5 13/64	3 43/64	25/64	5/8	15/32	1 1/32	1 1/2	4.1339	2 3/64	1.9370	0.748	1/2
1 11/16	UCFC209-111D1													
1 3/4	UCFC209-112D1													

Note (1) These numbers indicate relubricatable type. If maintenance free type is needed, please order without suffix "D1".
Remarks Please refer to page **A21** for size of grease fitting.

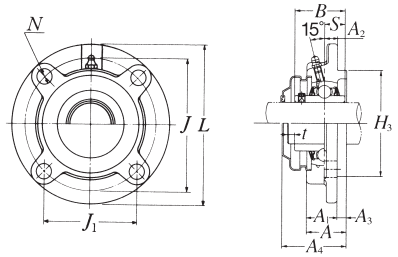

Pressed steel dust cover type
Open end **Z-UCFC···D1**
Closed end **ZM-UCFC···D1**

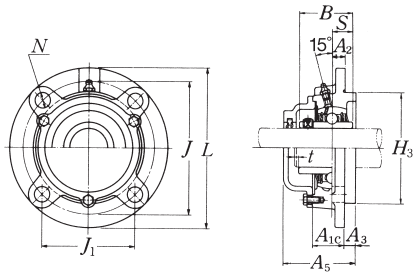

Cast dust cover type
Open end **C-UCFC···D1**
Closed end **CM-UCFC···D1**

Bearing number	Housing number	Unit number (1) pressed steel dust cover type	Unit number (1) cast dust cover type	Nominal dimensions mm / inch t max.	A_4	A_{1C}	A_5	Mass of unit kg / lb UCFC	Z(ZM)	C(CM)
UC201D1	FC204D1	Z(ZM)-UCFC201D1	C(CM)-UCFC201D1	2	38	20.5	46	0.8	0.8	0.9
UC201-008D1	FC204D1	Z(ZM)-UCFC201-008D1	C(CM)-UCFC201-008D1	5/64	1 1/2	13/16	1 13/16	1.8	1.8	2.0
UC202D1	FC204D1	Z(ZM)-UCFC202D1	C(CM)-UCFC202D1	2	38	20.5	46	0.8	0.8	0.9
UC202-009D1	FC204D1	Z(ZM)-UCFC202-009D1	C(CM)-UCFC202-009D1	5/64	1 1/2	13/16	1 13/16	1.8	1.8	2.0
UC202-010D1	FC204D1	Z(ZM)-UCFC202-010D1	C(CM)-UCFC202-010D1							
UC203D1	FC204D1	Z(ZM)-UCFC203D1	C(CM)-UCFC203D1	2	38	20.5	46	0.8	0.8	0.9
UC203-011D1	FC204D1	Z(ZM)-UCFC203-011D1	C(CM)-UCFC203-011D1	5/64	1 1/2	13/16	1 13/16	1.8	1.8	2.0
UC204D1	FC204D1	Z(ZM)-UCFC204D1	C(CM)-UCFC204D1	2	38	20.5	46	0.7	0.7	0.9
UC204-012D1	FC204D1	Z(ZM)-UCFC204-012D1	C(CM)-UCFC204-012D1	5/64	1 1/2	13/16	1 13/16	1.5	1.5	2.0
UC205D1	FC205D1	Z(ZM)-UCFC205D1	C(CM)-UCFC205D1	2	40	22	51	1.0	1.0	1.2
UC205-013D1	FC205D1	Z(ZM)-UCFC205-013D1	C(CM)-UCFC205-013D1	5/64	1 19/32	7/8	2	2.2	2.2	2.6
UC205-014D1	FC205D1	Z(ZM)-UCFC205-014D1	C(CM)-UCFC205-014D1							
UC205-015D1	FC205D1	Z(ZM)-UCFC205-015D1	C(CM)-UCFC205-015D1							
UC205-100D1	FC205D1	Z(ZM)-UCFC205-100D1	C(CM)-UCFC205-100D1							
UC206D1	FC206D1	Z(ZM)-UCFC206D1	C(CM)-UCFC206D1	2	45	24.5	56	1.3	1.4	1.6
UC206-101D1	FC206D1	Z(ZM)-UCFC206-101D1	C(CM)-UCFC206-101D1	5/64	1 3/4	31/32	2 13/64	2.9	3.1	3.5
UC206-102D1	FC206D1	Z(ZM)-UCFC206-102D1	C(CM)-UCFC206-102D1							
UC206-103D1	FC206D1	Z(ZM)-UCFC206-103D1	C(CM)-UCFC206-103D1							
UC206-104D1	FC206D1	—	C(CM)-UCFC206-104D1							
UC207D1	FC207D1	Z(ZM)-UCFC207D1	C(CM)-UCFC207D1	3	49	26	59	1.6	1.7	1.9
UC207-104D1	FC207D1	Z(ZM)-UCFC207-104D1	C(CM)-UCFC207-104D1	1/8	1 15/16	1 1/32	2 21/64	3.5	3.7	4.2
UC207-105D1	FC207D1	Z(ZM)-UCFC207-105D1	C(CM)-UCFC207-105D1							
UC207-106D1	FC207D1	Z(ZM)-UCFC207-106D1	C(CM)-UCFC207-106D1							
UC207-107D1	FC207D1	—	C(CM)-UCFC207-107D1							
UC208D1	FC208D1	Z(ZM)-UCFC208D1	C(CM)-UCFC208D1	3	56	27.5	66	2.0	2.1	2.4
UC208-108D1	FC208D1	Z(ZM)-UCFC208-108D1	C(CM)-UCFC208-108D1	1/8	2 3/16	1 5/64	2 19/32	4.4	4.6	5.3
UC208-109D1	FC208D1	Z(ZM)-UCFC208-109D1	C(CM)-UCFC208-109D1							
UC209D1	FC209D1	Z(ZM)-UCFC209D1	C(CM)-UCFC209D1	3	57	28	70	2.7	2.7	3.2
UC209-110D1	FC209D1	Z(ZM)-UCFC209-110D1	C(CM)-UCFC209-110D1	1/8	2 1/4	1 7/64	2 3/4	6.0	6.0	7.1
UC209-111D1	FC209D1	Z(ZM)-UCFC209-111D1	C(CM)-UCFC209-111D1							
UC209-112D1	FC209D1	Z(ZM)-UCFC209-112D1	C(CM)-UCFC209-112D1							

Round flanged unit, cast housing with spigot joint
Set screw type

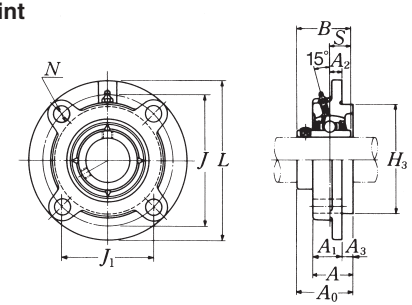

Shaft dia. mm / inch	Unit number (1)	Nominal dimensions mm inch L	J	(J_1)	A_2	N	A_3	A_1	A	H_3	A_0	B	S	Bolt size mm / inch
50	UCFC210D1	165	138	97.6	10	16	12	28	40	110	54.6	51.6	19	M14
1 13/16	UCFC210-113D1													
1 7/8	UCFC210-114D1													
1 15/16	UCFC210-115D1	6 1/2	5 7/16	3 27/32	25/64	5/8	15/32	1 3/32	1 37/64	4.3307	2 5/32	2.0315	0.748	1/2
2	UCFC210-200D1													
55	UCFC211D1	185	150	106.1	13	19	12	31	43	125	58.4	55.6	22.2	M16
2	UCFC211-200D1													
2 1/16	UCFC211-201D1													
2 1/8	UCFC211-202D1	7 9/32	5 29/32	4 11/64	33/64	3/4	15/32	1 7/32	1 11/16	4.9213	2 19/64	2.1890	0.874	5/8
2 3/16	UCFC211-203D1													
60	UCFC212D1	195	160	113.1	17	19	12	36	48	135	68.7	65.1	25.4	M16
2 1/4	UCFC212-204D1													
2 5/16	UCFC212-205D1													
2 3/8	UCFC212-206D1	7 11/16	6 19/64	4 29/64	43/64	3/4	15/32	1 13/32	1 57/64	5.3150	2 45/64	2.5630	1.000	5/8
2 7/16	UCFC212-207D1													
65	UCFC213D1	205	170	120,2	16	19	14	36	50	145	69.7	65.1	25.4	M16
2 1/2	UCFC213-208D1	8 1/16	6 11/16	4 47/64	5/8	3/4	35/64	1 13/32	1 31/32	5.7087	2 3/4	2.5630	1.000	5/8
2 9/16	UCFC213-209D1													
70	UCFC214D1	215	177	125.2	17	19	14	40	54	150	75.4	74.6	30.2	M16
2 5/8	UCFC214-210D1													
2 11/16	UCFC214-211D1	8 15/32	6 31/32	4 59/64	43/64	3/4	35/64	1 37/64	2 1/8	5.9055	2 31/32	2.9370	1.189	5/8
2 3/4	UCFC214-212D1													
75	UCFC215D1	220	184	130.1	18	19	16	40	56	160	78.5	77.8	33.3	M16
2 13/16	UCFC215-213D1													
2 7/8	UCFC215-214D1													
2 15/16	UCFC215-215D1	8 21/32	7 1/4	5 1/8	45/64	3/4	5/8	1 37/64	2 13/64	6.2992	3 3/32	3.0630	1.311	5/8
3	UCFC215-300D1													
80	UCFC216D1	240	200	141.4	18	23	16	42	58	170	83.3	82.6	33.3	M20
3 1/16	UCFC216-301D1													
3 1/8	UCFC216-302D1	9 7/16	7 7/8	5 9/16	45/64	29/32	5/8	1 21/32	2 9/32	6.6929	3 9/32	3.2520	1.311	3/4
3 3/16	UCFC216-303D1													

Note (1) These numbers indicate relubricatable type. If maintenance free type is needed, please order without suffix "D1".
Remarks Please refer to page **A21** for size of grease fitting.

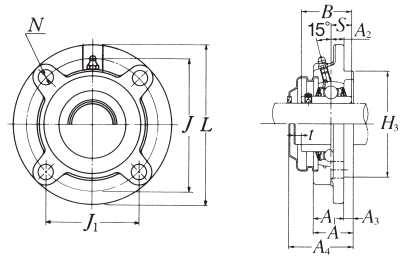

Pressed steel dust cover type
Open end **Z-UCFC···D1**
Closed end **ZM-UCFC···D1**

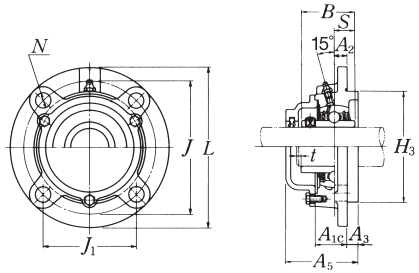

Cast dust cover type
Open end **C-UCFC···D1**
Closed end **CM-UCFC···D1**

Bearing number	Housing number	Unit number (1) pressed steel dust cover type	Unit number (1) cast dust cover type	Nominal dimensions mm inch t max.	A_4	A_{1C}	A_5	Mass of unit kg lb UCFC	Z(ZM)	C(CM)
UC210D1	FC210D1	Z(ZM)-UCFC210D1	C(CM)-UCFC210D1	3	60	29	72	3.0	3.1	3.6
UC210-113D1	FC210D1	Z(ZM)-UCFC210-113D1	C(CM)-UCFC210-113D1							
UC210-114D1	FC210D1	Z(ZM)-UCFC210-114D1	C(CM)-UCFC210-114D1	1/8	2 3/8	1 5/32	2 53/64	6.6	6.8	7.9
UC210-115D1	FC210D1	Z(ZM)-UCFC210-115D1	C(CM)-UCFC210-115D1							
UC210-200D1	FC210D1	—	C(CM)-UCFC210-200D1							
UC211D1	FC211D1	Z(ZM)-UCFC211D1	C(CM)-UCFC211D1	4	64	32.5	75	4.1	4.2	4.8
UC211-200D1	FC211D1	Z(ZM)-UCFC211-200D1	C(CM)-UCFC211-200D1							
UC211-201D1	FC211D1	Z(ZM)-UCFC211-201D1	C(CM)-UCFC211-201D1	5/32	2 1/2	1 9/32	2 61/64	9.0	9.3	11
UC211-202D1	FC211D1	Z(ZM)-UCFC211-202D1	C(CM)-UCFC211-202D1							
UC211-203D1	FC211D1	Z(ZM)-UCFC211-203D1	C(CM)-UCFC211-203D1							
UC212D1	FC212D1	Z(ZM)-UCFC212D1	C(CM)-UCFC212D1	4	74	38	86	4.9	5.1	5.9
UC212-204D1	FC212D1	Z(ZM)-UCFC212-204D1	C(CM)-UCFC212-204D1							
UC212-205D1	FC212D1	Z(ZM)-UCFC212-205D1	C(CM)-UCFC212-205D1	5/32	2 29/32	1 1/2	3 25/64	11	11	13
UC212-206D1	FC212D1	Z(ZM)-UCFC212-206D1	C(CM)-UCFC212-206D1							
UC212-207D1	FC212D1	—	C(CM)-UCFC212-207D1							
UC213D1	FC213D1	Z(ZM)-UCFC213D1	C(CM)-UCFC213D1	4	76	38	89.5	5.8	6.0	6.8
UC213-208D1	FC213D1	Z(ZM)-UCFC213-208D1	C(CM)-UCFC213-208D1	5/32	3	1 1/2	3 17/32	13	13	15
UC213-209D1	FC213D1	Z(ZM)-UCFC213-209D1	C(CM)-UCFC213-209D1							
UC214D1	FC214D1	—	C(CM)-UCFC214D1	4	—	39.5	98	7.0	—	8.0
UC214-210D1	FC214D1		C(CM)-UCFC214-210D1							
UC214-211D1	FC214D1	—	C(CM)-UCFC214-211D1	5/32	—	1 9/16	3 55/64	15	—	18
UC214-212D1	FC214D1		C(CM)-UCFC214-212D1							
UC215D1	FC215D1	—	C(CM)-UCFC215D1	4	—	43	102	7.4	—	8.8
UC215-213D1	FC215D1		C(CM)-UCFC215-213D1							
UC215-214D1	FC215D1	—	C(CM)-UCFC215-214D1	5/32	—	1 11/16	4 1/64	16	—	19
UC215-215D1	FC215D1		C(CM)-UCFC215-215D1							
UC215-300D1	FC215D1		C(CM)-UCFC215-300D1							
UC216D1	FC216D1	—	C(CM)-UCFC216D1	4	—	43	106	9.1	—	10
UC216-301D1	FC216D1		C(CM)-UCFC216-301D1							
UC216-302D1	FC216D1	—	C(CM)-UCFC216-302D1	5/32	—	1 11/16	4 11/64	20	—	22
UC216-303D1	FC216D1		C(CM)-UCFC216-303D1							

Round flanged unit, cast housing with spigot joint
Set screw type

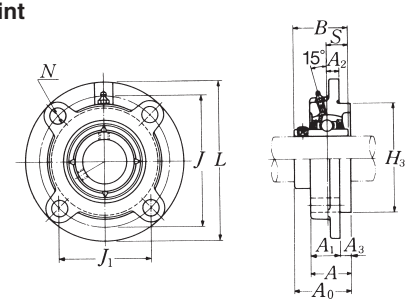

Shaft dia. mm inch	Unit number (1)	Nominal dimensions mm inch L	J	(J_1)	A_2	N	A_3	A_1	A	H_3	A_0	B	S	Bolt size mm inch
85	UCFC217D1	250	208	147.1	18	23	18	45	63	180	87.6	85.7	34.1	M20
3 1/4	UCFC217-304D1													
3 5/16	UCFC217-305D1	9 27/32	8 3/16	5 51/64	45/64	29/32	45/64	1 25/32	2 31/64	7.0866	3 29/64	3.3740	1.343	3/4
3 7/16	UCFC217-307D1													
90	UCFC218D1	265	220	155.6	22	23	18	50	68	190	96.3	96	39.7	M20
3 1/2	UCFC218-308D1	10 7/16	8 21/32	6 1/8	55/64	29/32	45/64	1 31/32	2 43/64	7.4803	3 51/64	3.7795	1.563	3/4

Note (1) These numbers indicate relubricatable type. If maintenance free type is needed, please order without suffix "D1".
Remarks Please refer to page **A21** for size of grease fitting.

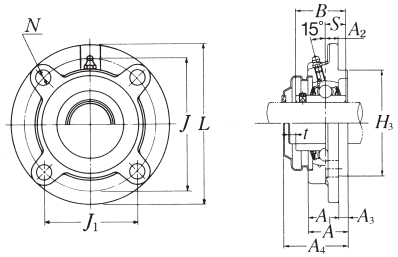

Pressed steel dust cover type
Open end **Z-UCFC···D1**
Closed end **ZM-UCFC···D1**

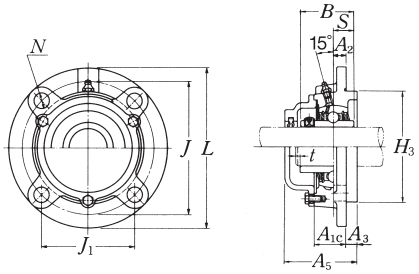

Cast dust cover type
Open end **C-UCFC···D1**
Closed end **CM-UCFC···D1**

Bearing number	Housing number	Unit number (1) pressed steel dust cover type	Unit number (1) cast dust cover type	Nominal deimensions mm inch t max.	A_4	A_{1C}	A_5	Mass of unit kg lb UCFC	Z(ZM)	C(CM)
UC217D1	FC217D1	—	C(CM)-UCFC217D1	5	—	45.5	114	11	—	12
UC217-304D1	FC217D1		C(CM)-UCFC217-304D1							
UC217-305D1	FC217D1	—	C(CM)-UCFC217-305D1	13/64	—	1 51/64	4 31/64	24	—	26
UC217-307D1	FC217D1		C(CM)-UCFC217-307D1							
UC218D1	FC218D1	—	C(CM)-UCFC218D1	5	—	50	122	13	—	15
UC218-308D1	FC218D1	—	C(CM)-UCFC218-308D1	13/64	—	1 31/32	4 51/64	29	—	33

Round flanged unit, cast housing with spigot joint
Set screw type

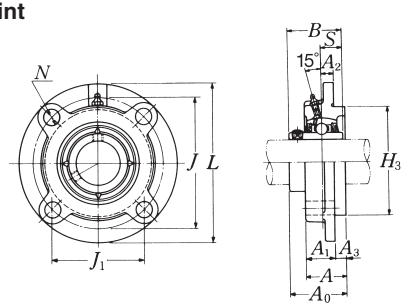

Shaft dia. mm inch	Unit number (1)	Nominal dimensions mm inch L	J	(J_1)	A_2	N	A_3	A_1	A	H_3	A_0	B	S	Bolt size mm inch
25	UCFCX05D1	111	92	65.1	10	9.5	6	24	30	76	38.2	38.1	15.9	M8
13/16	UCFCX05-013D1													
7/8	UCFCX05-014D1	4 3/8	3 5/8	2 9/16	25/64	3/8	1/4	15/16	1 3/16	2.9921	1 1/2	1.5000	0.626	5/16
15/16	UCFCX05-015D1													
1	UCFCX05-100D1													
30	UCFCX06D1	127	105	74.2	8	12	9.5	22.5	32	85	42.9	42.9	17.5	M10
1 1/16	UCFCX06-101D1													
1 1/8	UCFCX06-102D1	5	4 9/64	2 59/64	5/16	15/32	3/8	7/8	1 27/64	3.3465	1 11/16	1.6890	0.689	3/8
1 3/16	UCFCX06-103D1													
1 1/4	UCFCX06-104D1													
35	UCFCX07D1	133	111	78.5	9	12	11	26	37	92	50.2	49.2	19	M10
1 5/16	UCFCX07-105D1													
1 3/8	UCFCX07-106D1	5 1/4	4 3/8	3 3/32	23/64	15/32	7/16	1 1/32	1 29/64	3.6220	1 31/32	1.9370	0.748	3/8
1 7/16	UCFCX07-107D1													
40	UCFCX08D1	133	111	78.5	9	12	11	26	37	92	50.2	49.2	19	M10
1 1/2	UCFCX08-108D1	5 1/4	4 3/8	3 3/32	23/64	15/32	7/16	1 1/32	1 29/64	3.6220	1 31/32	1.9370	0.748	3/8
1 9/16	UCFCX08-109D1													
45	UCFCX09D1	155	130	91.9	8	14	12	25	37	108	52.6	51.6	19	M12
1 5/8	UCFCX09-110D1													
1 11/16	UCFCX09-111D1	6 3/32	5 1/8	3 5/8	5/16	35/64	15/32	31/32	1 29/64	4.2520	2 5/64	2.0315	0.748	7/16
1 3/4	UCFCX09-112D1													
1 13/16	UCFCX09-113D1													
50	UCFCX10D1	162	136	96.2	7	14	16	25	41	118	56.4	55.6	22.2	M12
1 7/8	UCFCX10-114D1													
1 15/16	UCFCX10-115D1	6 3/8	5 23/64	3 25/32	9/32	35/64	5/8	31/32	1 39/64	4.6457	2 7/32	2.1890	0.874	7/16
2	UCFCX10-200D1													

Bearing number	Housing (1) number	Mass of unit kg lb
UCX05D1	FCX05D1	1.2
UCX05-013D1	FCX05D1	
UCX05-014D1	FCX05D1	2.6
UCX05-015D1	FCX05D1	
UCX05-100D1	FCX05D1	
UCX06D1	FCX06D1	1.7
UCX06-101D1	FCX06D1	
UCX06-102D1	FCX06D1	3.7
UCX06-103D1	FCX06D1	
UC207-104D1	FCX06D1	
UCX07D1	FCX07D1	1.9
UCX07-105D1	FCX07D1	
UCX07-106D1	FCX07D1	4.2
UCX07-107D1	FCX07D1	
UCX08D1	FCX08D1	2.0
UCX08-108D1	FCX08D1	4.4
UCX08-109D1	FCX08D1	
UCX09D1	FCX09D1	2.6
UCX09-110D1	FCX09D1	
UCX09-111D1	FCX09D1	5.7
UCX09-112D1	FCX09D1	
UC210-113D1	FCX09D1	
UCX10D1	FCX10D1	3.1
UCX10-114D1	FCX10D1	
UCX10-115D1	FCX10D1	6.8
UC211-200D1	FCX10D1	

Note (1) These numbers indicate relubricatable type. If maintenance free type is needed, please order without suffix "D1".
Remarks Please refer to page **A21** for size of grease fitting.

Round flanged unit, cast housing with spigot joint
Set screw type

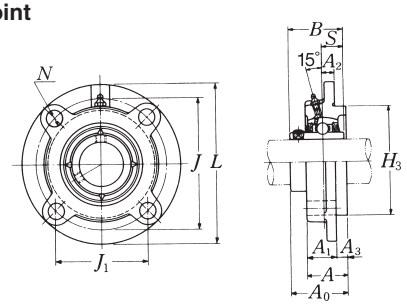

Shaft dia. mm / inch	Unit number (1)	Nominal dimensions mm inch L	J	(J_1)	A_2	N	A_3	A_1	A	H_3	A_0	B	S	Bolt size mm / inch
55	UCFCX11D1	180	152	107.5	4	16	22	26	48	127	65.7	65.1	25.4	M14
2 1/16	UCFCX11-201D1													
2 1/8	UCFCX11-202D1													
2 3/16	UCFCX11-203D1	7 3/32	5 63/64	4 15/64	5/32	5/8	55/64	1 1/32	1 57/64	5.0000	2 19/32	2.5630	1.000	1/2
2 1/4	UCFCX11-204D1													
2 5/16	UCFCX11-205D1													
60	UCFCX12D1	194	165	116.7	11	16	20	33	53	140	70.7	65.1	25.4	M14
2 3/8	UCFCX12-206D1	7 5/8	6 1/2	4 19/32	7/16	5/8	25/32	1 5/16	2 5/64	5.5118	2 25/32	2.5630	1.000	1/2
2 7/16	UCFCX12-207D1													
65	UCFCX13D1	194	165	116.7	11	16	20	33	53	140	75.4	74.6	30.2	M14
2 1/2	UCFCX13-208D1	7 5/8	6 1/2	4 19/32	7/16	5/8	25/32	1 5/16	2 5/64	5.5118	2 31/32	2.9370	1.189	1/2
2 9/16	UCFCX13-209D1													
70	UCFCX14D1	222	190	134.4	14	19	20	36	56	164	78.5	77.8	33.3	M16
2 5/8	UCFCX14-210D1													
2 11/16	UCFCX14-211D1	8 3/4	7 31/64	5 9/32	35/64	3/4	25/32	1 13/32	2 13/64	6.4567	3 3/32	3.0630	1.311	5/8
2 3/4	UCFCX14-212D1													
75	UCFCX15D1	222	190	134.4	12	19	22	35	57	164	83.3	82.6	33.3	M16
2 13/16	UCFCX15-213D1													
2 7/8	UCFCX15-214D1	8 3/4	7 31/64	5 9/32	15/32	3/4	55/64	1 3/8	2 1/4	6.4567	3 9/32	3.2520	1.311	5/8
2 15/16	UCFCX15-215D1													
3	UCFCX15-300D1													
80	UCFCX16D1	260	219	154.9	10	23	25	36	61	186	86.6	85.7	34.1	M20
3 1/16	UCFCX16-301D1													
3 1/8	UCFCX16-302D1	10 1/4	8 5/8	6 3/32	25/64	29/32	63/64	1 13/32	2 13/32	7.3228	3 13/32	3.3740	1.343	3/4
3 3/16	UCFCX16-303D1													
3 1/4	UCFCX16-304D1													
85	UCFCX17D1	260	219	154.9	10	23	25	36	61	186	91.3	96	39.7	M20
3 5/16	UCFCX17-305D1	10 1/4	8 5/8	6 3/32	25/64	29/32	63/64	1 13/32	2 13/32	7.3228	3 19/32	3.7795	1.563	3/4
3 7/16	UCFCX17-307D1													

Note (1) These numbers indicate relubricatable type. If maintenance free type is needed, please order without suffix "D1".
Remarks Please refer to page **A21** for size of grease fitting.

Bearing number	Housing (1) number	Mass of unit kg / lb
UCX11D1	FCX11D1	4.2
UCX11-201D1	FCX11D1	
UCX11-202D1	FCX11D1	
UCX11-203D1	FCX11D1	9.3
UC212-204D1	FCX11D1	
UC212-205D1	FCX11D1	
UCX12D1	FCX12D1	5.5
UCX12-206D1	FCX12D1	12
UCX12-207D1	FCX12D1	
UCX13D1	FCX13D1	5.7
UCX13-208D1	FCX13D1	13
UCX13-209D1	FCX13D1	
UCX14D1	FCX14D1	7.3
UCX14-210D1	FCX14D1	
UCX14-211D1	FCX14D1	16
UCX14-212D1	FCX14D1	
UCX15D1	FCX15D1	8.0
UCX15-213D1	FCX15D1	
UCX15-214D1	FCX15D1	18
UCX15-215D1	FCX15D1	
UCX15-300D1	FCX15D1	
UCX16D1	FCX16D1	12
UCX16-301D1	FCX16D1	
UCX16-302D1	FCX16D1	26
UCX16-303D1	FCX16D1	
UC217-304D1	FCX16D1	
UCX17D1	FCX17D1	12
UCX17-305D1	FCX17D1	26
UCX17-307D1	FCX17D1	

Round flanged unit, cast housing with spigot joint
Set screw type

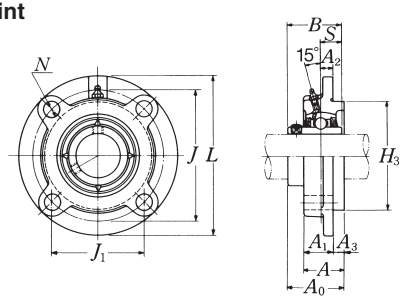

Shaft dia. mm / inch	Unit number (1)	Nominal dimensions mm / inch L	J	(J_1)	A_2	N	A_3	A_1	A	H_3	A_0	B	S	Bolt size mm / inch
90	UCFCX18D1	260	219	154.9	12	23	28	43	71	186	101.1	104	42.9	M20
3 7/16	UCFCX18-307D1	10 1/4	8 5/8	6 3/32	15/32	29/32	1 7/64	1 11/16	2 51/64	7.3228	3 63/64	4.0945	1.689	3/4
3 1/2	UCFCX18-308D1													
100	UCFCX20D1	276	238	168.3	22	23	28	66	94	206	118.3	117.5	49.2	M20
3 13/16	UCFCX20-313D1													
3 7/8	UCFCX20-314D1	10 7/8	9 3/8	6 5/8	55/64	29/32	1 7/64	2 19/32	3 45/64	8.1102	4 21/32	4.6260	1.937	3/4
3 15/16	UCFCX20-315D1													
4	UCFCX20-400D1													

Note (1) These numbers indicate relubricatable type. If maintenance free type is needed, please order without suffix "D1".
Remarks Please refer to page **A21** for size of grease fitting.

Bearing number	Housing (1) number	Mass of unit kg / lb
UCX18D1	FCX18D1	12
UCX18-307D1	FCX18D1	26
UCX18-308D1	FCX18D1	
UCX20D1	FCX20D1	18
UCX20-313D1	FCX20D1	40
UCX20-314D1	FCX20D1	
UCX20-315D1	FCX20D1	
UCX20-400D1	FCX20D1	

Rhombus flanged unit, cast housing
Set screw type

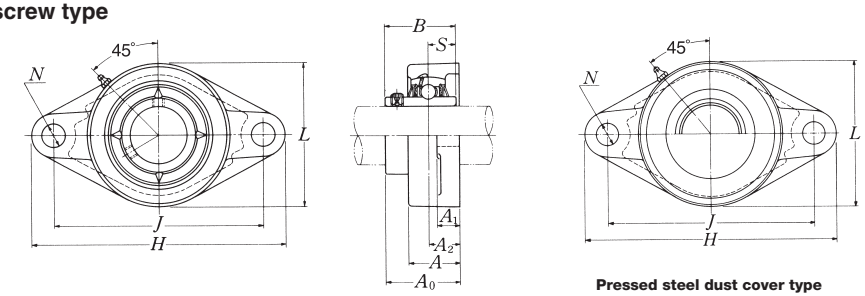

Pressed steel dust cover type
Open end **Z-UCFL···D1**
Closed end **ZM-UCFL···D1**

Shaft dia. mm / inch	Unit number (1)	Nominal dimensions mm / inch H	J	A_2	A_1	A	N	L	A_0	B	S	Bolt size mm / inch	Bearing number
12	UCFL201D1	113	90	15	11	25.5	12	60	33.3	31	12.7	M10	UC201D1
1/2	UCFL201-008D1	4 7/16	3 35/64	19/32	7/16	1	15/32	2 3/8	1 5/16	1.2205	0.500	3/8	UC201-008D1
15	UCFL202D1	113	90	15	11	25.5	12	60	33.3	31	12.7	M10	UC202D1
9/16	UCFL202-009D1	4 7/16	3 35/64	19/32	7/16	1	15/32	2 3/8	1 5/16	1.2205	0.500	3/8	UC202-009D1
5/8	UCFL202-010D1												UC202-010D1
17	UCFL203D1	113	90	15	11	25.5	12	60	33.3	31	12.7	M10	UC203D1
11/16	UCFL203-011D1	4 7/16	3 35/64	19/32	7/16	1	15/32	2 3/8	1 5/16	1.2205	0.500	3/8	UC203-011D1
20	UCFL204D1	113	90	15	11	25.5	12	60	33.3	31	12.7	M10	UC204D1
3/4	UCFL204-012D1	4 7/16	3 35/64	19/32	7/16	1	15/32	2 3/8	1 5/16	1.2205	0.500	3/8	UC204-012D1
25	UCFL205D1	130	99	16	13	27	16	68	35.8	34.1	14.3	M14	UC205D1
13/16	UCFL205-013D1												UC205-013D1
7/8	UCFL205-014D1	5 1/8	3 57/64	5/8	1/2	1 1/16	5/8	2 11/16	1 13/32	1.3425	0.563	1/2	UC205-014D1
15/16	UCFL205-015D1												UC205-015D1
1	UCFL205-100D1												UC205-100D1
30	UCFL206D1	148	117	18	13	31	16	80	40.2	38.1	15.9	M14	UC206D1
1 1/16	UCFL206-101D1												UC206-101D1
1 1/8	UCFL206-102D1	5 13/16	4 39/64	45/64	1/2	1 7/32	5/8	3 5/32	1 37/64	1.5000	0.626	1/2	UC206-102D1
1 3/16	UCFL206-103D1												UC206-103D1
1 1/4	UCFL206-104D1												UC206-104D1
35	UCFL207D1	161	130	19	15	34	16	90	44.4	42.9	17.5	M14	UC207D1
1 1/4	UCFL207-104D1												UC207-104D1
1 5/16	UCFL207-105D1	6 11/32	5 1/8	3/4	19/32	1 11/32	5/8	3 17/32	1 3/4	1.6890	0.689	1/2	UC207-105D1
1 3/8	UCFL207-106D1												UC207-106D1
1 7/16	UCFL207-107D1												UC207-107D1
40	UCFL208D1	175	144	21	15	36	16	100	51.2	49.2	19	M14	UC208D1
1 1/2	UCFL208-108D1	6 7/8	5 43/64	53/64	19/32	1 13/32	5/8	3 15/16	2 1/64	1.9370	0.748	1/2	UC208-108D1
1 9/16	UCFL208-109D1												UC208-109D1

Note (1) These numbers indicate relubricatable type. If maintenance free type is needed, please order without suffix "D1".
Remarks Please refer to page **A21** for size of grease fitting.

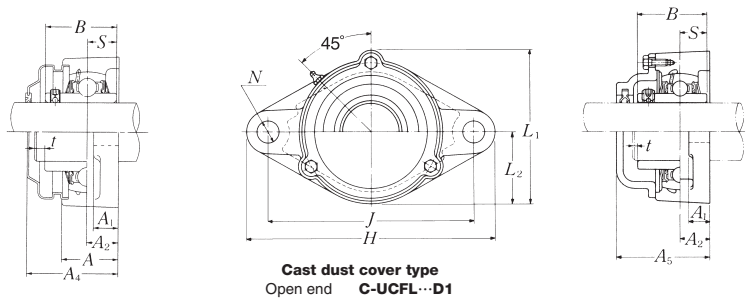

Cast dust cover type
Open end **C-UCFL···D1**
Closed end **CM-UCFL···D1**

Housing number	Unit number (1) pressed steel dust cover type	Unit number (1) cast dust cover type	Nominal dimensions mm / inch t max.	A_4	A_5	L_1	L_2	Mass of unit kg / lb UCFL	Z(ZM)	C(CM)
FL204D1	Z(ZM)-UCFL201D1	C(CM)-UCFL201D1	2	38	46	67	30	0.5	0.5	0.6
FL204D1	Z(ZM)-UCFL201-008D1	C(CM)-UCFL201-008D1	5/64	1 1/2	1 13/16	2 5/8	1 3/16	1.1	1.1	1.3
FL204D1	Z(ZM)-UCFL202D1	C(CM)-UCFL202D1	2	38	46	67	30	0.5	0.5	0.6
FL204D1	Z(ZM)-UCFL202-009D1	C(CM)-UCFL202-009D1	5/64	1 1/2	1 13/16	2 5/8	1 3/16	1.1	1.1	1.3
FL204D1	Z(ZM)-UCFL202-010D1	C(CM)-UCFL202-010D1								
FL204D1	Z(ZM)-UCFL203D1	C(CM)-UCFL203D1	2	38	46	67	30	0.5	0.5	0.6
FL204D1	Z(ZM)-UCFL203-011D1	C(CM)-UCFL203-011D1	5/64	1 1/2	1 13/16	2 5/8	1 3/16	1.1	1.1	1.3
FL204D1	Z(ZM)-UCFL204D1	C(CM)-UCFL204D1	2	38	46	67	30	0.4	0.4	0.6
FL204D1	Z(ZM)-UCFL204-012D1	C(CM)-UCFL204-012D1	5/64	1 1/2	1 13/16	2 5/8	1 3/16	0.9	0.9	1.3
FL205D1	Z(ZM)-UCFL205D1	C(CM)-UCFL205D1	2	40	51	74	34	0.6	0.6	0.8
FL205D1	Z(ZM)-UCFL205-013D1	C(CM)-UCFL205-013D1								
FL205D1	Z(ZM)-UCFL205-014D1	C(CM)-UCFL205-014D1	5/64	1 19/32	2	2 29/32	1 11/32	1.3	1.3	1.8
FL205D1	Z(ZM)-UCFL205-015D1	C(CM)-UCFL205-015D1								
FL205D1	Z(ZM)-UCFL205-100D1	C(CM)-UCFL205-100D1								
FL206D1	Z(ZM)-UCFL206D1	C(CM)-UCFL206D1	2	45	56	85	40	0.9	0.9	1.2
FL206D1	Z(ZM)-UCFL206-101D1	C(CM)-UCFL206-101D1								
FL206D1	Z(ZM)-UCFL206-102D1	C(CM)-UCFL206-102D1	5/64	1 3/4	2 7/32	3 11/32	1 9/16	2.0	2.0	2.6
FL206D1	Z(ZM)-UCFL206-103D1	C(CM)-UCFL206-103D1								
FL206D1	—	C(CM)-UCFL206-104D1								
FL207D1	Z(ZM)-UCFL207D1	C(CM)-UCFL207D1	3	49	59	97	45	1.2	1.2	1.4
FL207D1	Z(ZM)-UCFL207-104D1	C(CM)-UCFL207-104D1								
FL207D1	Z(ZM)-UCFL207-105D1	C(CM)-UCFL207-105D1	1/8	1 15/16	2 5/16	3 13/16	1 25/32	2.6	2.6	3.1
FL207D1	Z(ZM)-UCFL207-106D1	C(CM)-UCFL207-106D1								
FL207D1	—	C(CM)-UCFL207-107D1								
FL208D1	Z(ZM)-UCFL208D1	C(CM)-UCFL208D1	3	56	66	106	50	1.5	1.5	1.9
FL208D1	Z(ZM)-UCFL208-108D1	C(CM)-UCFL208-108D1	1/8	2 3/16	2 19/32	4 3/16	1 31/32	3.3	3.3	4.2
FL208D1	Z(ZM)-UCFL208-109D1	C(CM)-UCFL208-109D1								

Rhombus flanged unit, cast housing
Set screw type

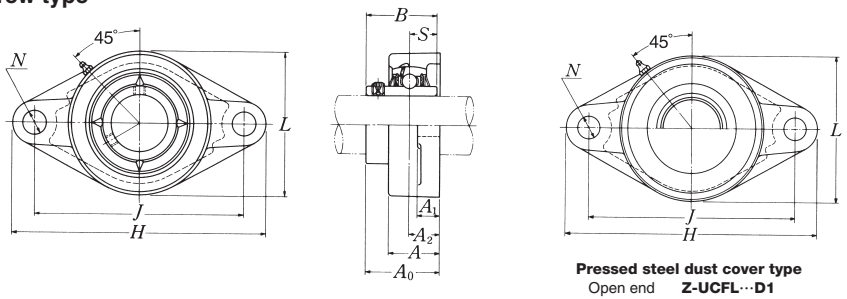

Pressed steel dust cover type
Open end **Z-UCFL···D1**
Closed end **ZM-UCFL···D1**

Shaft dia. mm / inch	Unit number (1)	Nominal dimensions mm / inch H	J	A_2	A_1	A	N	L	A_0	B	S	Bolt size mm / inch	Bearing number
45	UCFL209D1	188	148	22	16	38	19	108	52.2	49.2	19	M16	UC209D1
1 5/8	UCFL209-110D1												UC209-110D1
1 11/16	UCFL209-111D1	7 13/32	5 53/64	55/64	5/8	1 1/2	3/4	4 1/4	2 1/16	1.9370	0.748	5/8	UC209-111D1
1 3/4	UCFL209-112D1												UC209-112D1
50	UCFL210D1	197	157	22	16	40	19	115	54.6	51.6	19	M16	UC210D1
1 13/16	UCFL210-113D1												UC210-113D1
1 7/8	UCFL210-114D1	7 3/4	6 3/16	55/64	5/8	1 9/16	3/4	4 17/32	2 5/32	2.0315	0.748	5/8	UC210-114D1
1 15/16	UCFL210-115D1												UC210-115D1
2	UCFL210-200D1												UC210-200D1
55	UCFL211D1	224	184	25	18	43	19	130	58.4	55.6	22.2	M16	UC211D1
2	UCFL211-200D1												UC211-200D1
2 1/16	UCFL211-201D1	8 13/16	7 1/4	63/64	23/32	1 11/16	3/4	5 1/8	2 19/64	2.1890	0.874	5/8	UC211-201D1
2 1/8	UCFL211-202D1												UC211-202D1
2 13/16	UCFL211-203D1												UC211-203D1
60	UCFL212D1	250	202	29	18	48	23	140	68.7	65.1	25.4	M20	UC212D1
2 1/4	UCFL212-204D1												UC212-204D1
2 5/16	UCFL212-205D1	9 27/32	7 61/64	1 9/64	23/32	1 7/8	29/32	5 1/2	2 45/64	2.5630	1.000	3/4	UC212-205D1
2 3/8	UCFL212-206D1												UC212-206D1
2 7/16	UCFL212-207D1												UC212-207D1
65	UCFL213D1	258	210	30	22	50	23	155	69.7	65.1	25.4	M20	UC213D1
2 1/2	UCFL213-208D1	10 5/32	8 17/64	1 3/16	7/8	1 31/32	29/32	6 3/32	2 3/4	2.5630	1.000	3/4	UC213-208D1
2 9/16	UCFL213-209D1												UC213-209D1
70	UCFL214D1	265	216	31	22	54	23	160	75.4	74.6	30.2	M20	UC214D1
2 5/8	UCFL214-210D1												UC214-210D1
2 11/16	UCFL214-211D1	10 7/16	8 1/2	1 7/32	7/8	2 1/8	29/32	6 5/16	2 31/32	2.9370	1.189	3/4	UC214-211D1
2 3/4	UCFL214-212D1												UC214-212D1

Note (1) These numbers indicate relubricatable type. If maintenance free type is needed, please order without suffix "D1".
Remarks Please refer to page **A21** for size of grease fitting.

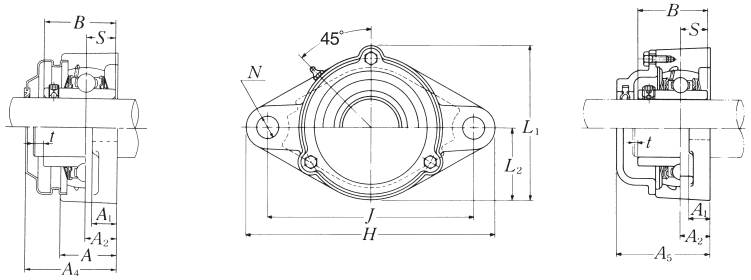

Cast dust cover type
Open end **C-UCFL···D1**
Closed end **CM-UCFL···D1**

Housing number	Unit number (1) pressed steel dust cover type	Unit number (1) cast dust cover type	Nominal dimensions mm / inch t max.	A_4	A_5	L_1	L_2	Mass of unit kg / lb UCFL	Z(ZM)	C(CM)
FL209D1	Z(ZM)-UCFL209D1	C(CM)-UCFL209D1	3	57	70	113	54	1.8	1.9	2.3
FL209D1	Z(ZM)-UCFL209-110D1	C(CM)-UCFL209-110D1								
FL209D1	Z(ZM)-UCFL209-111D1	C(CM)-UCFL209-111D1	1/8	2 1/4	2 3/4	4 7/16	2 1/8	4.0	4.2	5.1
FL209D1	Z(ZM)-UCFL209-112D1	C(CM)-UCFL209-112D1								
FL210D1	Z(ZM)-UCFL210D1	C(CM)-UCFL210D1	3	60	72	120	58	2.0	2.1	2.7
FL210D1	Z(ZM)-UCFL210-113D1	C(CM)-UCFL210-113D1								
FL210D1	Z(ZM)-UCFL210-114D1	C(CM)-UCFL210-114D1	1/8	2 3/8	2 27/32	4 23/32	2 9/32	4.4	4.6	6.0
FL210D1	Z(ZM)-UCFL210-115D1	C(CM)-UCFL210-115D1								
FL210D1	—	C(CM)-UCFL210-200D1								
FL211D1	Z(ZM)-UCFL211D1	C(CM)-UCFL211D1	4	64	75	133	65	2.9	3.0	3.4
FL211D1	Z(ZM)-UCFL211-200D1	C(CM)-UCFL211-200D1								
FL211D1	Z(ZM)-UCFL211-201D1	C(CM)-UCFL211-201D1	5/32	2 1/2	2 15/16	5 1/4	2 9/16	6.4	6.6	7.5
FL211D1	Z(ZM)-UCFL211-202D1	C(CM)-UCFL211-202D1								
FL211D1	Z(ZM)-UCFL211-203D1	C(CM)-UCFL211-203D1								
FL212D1	Z(ZM)-UCFL212D1	C(CM)-UCFL212D1	4	74	86	144	70	3.8	4.0	4.6
FL212D1	Z(ZM)-UCFL212-204D1	C(CM)-UCFL212-204D1								
FL212D1	Z(ZM)-UCFL212-205D1	C(CM)-UCFL212-205D1	5/32	2 29/32	3 3/8	5 21/32	2 3/4	8.4	8.8	10
FL212D1	Z(ZM)-UCFL212-206D1	C(CM)-UCFL212-206D1								
FL212D1	—	C(CM)-UCFL212-207D1								
FL213D1	Z(ZM)-UCFL213D1	C(CM)-UCFL213D1	4	76	90	157	78	4.8	4.9	5.8
FL213D1	Z(ZM)-UCFL213-208D1	C(CM)-UCFL213-208D1	5/32	3	3 17/32	6 3/16	3 1/16	11	11	13
FL213D1	Z(ZM)-UCFL213-209D1	C(CM)-UCFL213-209D1								
FL214D1	—	C(CM)-UCFL214D1	4	—	98	164	80	5.4	—	7.7
FL214D1		C(CM)-UCFL214-210D1								
FL214D1	—	C(CM)-UCFL214-211D1	5/32	—	3 27/32	6 15/32	3 5/32	12	—	17
FL214D1		C(CM)-UCFL214-212D1								

Rhombus flanged unit, cast housing
Set screw type

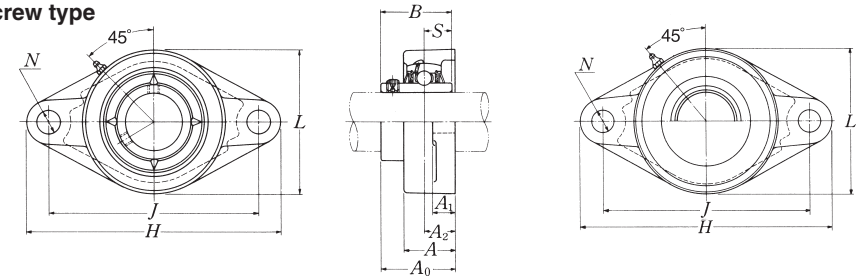

Pressed steel dust cover type
Open end **Z-UCFL···D1**
Closed end **ZM-UCFL···D1**

Shaft dia. mm / inch	Unit number (1)	Nominal dimensions mm inch H	J	A_2	A_1	A	N	L	A_0	B	S	Bolt size mm / inch	Bearing number
75	**UCFL215D1**	275	225	34	22	56	23	165	78.5	77.8	33.3	M20	UC215D1
2 13/16	**UCFL215-213D1**												UC215-213D1
2 7/8	**UCFL215-214D1**												UC215-214D1
2 15/16	**UCFL215-215D1**	10 13/16	8 55/64	1 11/32	7/8	2 7/32	29/32	6 1/2	3 3/32	3.0630	1.311	3/4	UC215-215D1
3	**UCFL215-300D1**												UC215-300D1
80	**UCFL216D1**	290	233	34	22	58	25	180	83.3	82.6	33.3	M22	UC216D1
3 1/16	**UCFL216-301D1**												UC216-301D1
3 1/8	**UCFL216-302D1**	11 13/32	9 11/64	1 11/32	7/8	2 9/32	63/64	7 3/32	3 9/32	3.2520	1.311	7/8	UC216-302D1
3 3/16	**UCFL216-303D1**												UC216-303D1
85	**UCFL217D1**	305	248	36	24	63	25	190	87.6	85.7	34.1	M22	UC217D1
3 1/4	**UCFL217-304D1**												UC217-304D1
3 5/16	**UCFL217-305D1**	12	9 49/64	1 27/64	15/16	2 15/32	63/64	7 15/32	3 29/64	3.3740	1.343	7/8	UC217-305D1
3 7/16	**UCFL217-307D1**												UC217-307D1
90	**UCFL218D1**	320	265	40	24	68	25	205	96.3	96	39.7	M22	UC218D1
3 1/2	**UCFL218-308D1**	12 19/32	10 7/16	1 37/64	15/16	2 11/16	63/64	8 1/16	3 51/64	3.7795	1.563	7/8	UC218-308D1

Note (1) These numbers indicate relubricatable type. If maintenance free type is needed, please order without suffix "D1".
Remarks Please refer to page **A21** for size of grease fitting.

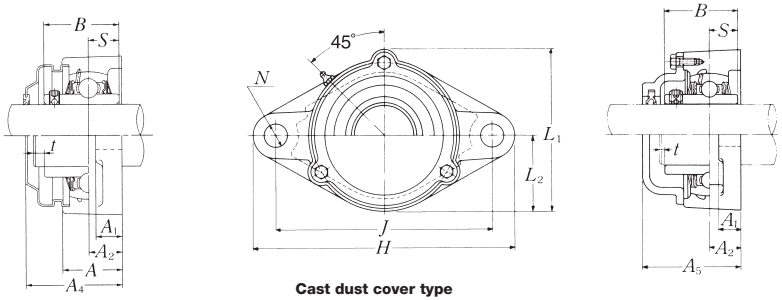

Cast dust cover type
Open end **C-UCFL···D1**
Closed end **CM-UCFL···D1**

Housing number	Unit number pressed steel dust cover type	Unit number (1) cast dust cover type	Nominal dimensions mm inch t max.	A_4	A_5	L_1	L_2	Mass of unit kg lb UCFL	Z(ZM)	C(CM)
FL215D1	—	**C(CM)-UCFL215D1**	4	—	102	169	82	6.0	—	7.1
FL215D1		**C(CM)-UCFL215-213D1**								
FL215D1		**C(CM)-UCFL215-214D1**								
FL215D1	—	**C(CM)-UCFL215-215D1**	5/32	—	4 1/32	6 21/32	3 7/32	13	—	16
FL215D1		**C(CM)-UCFL215-300D1**								
FL216D1	—	**C(CM)-UCFL216D1**	4	—	106	183	90	7.4	—	8.6
FL216D1		**C(CM)-UCFL216-301D1**								
FL216D1	—	**C(CM)-UCFL216-302D1**	5/32	—	4 3/16	7 7/32	3 17/32	16	—	19
FL216D1		**C(CM)-UCFL216-303D1**								
FL217D1	—	**C(CM)-UCFL217D1**	5	—	114	192	95	8.8	—	10
FL217D1		**C(CM)-UCFL217-304D1**								
FL217D1	—	**C(CM)-UCFL217-305D1**	13/64	—	4 1/2	7 9/16	3 3/4	19	—	22
FL217D1		**C(CM)-UCFL217-307D1**								
FL218D1	—	**C(CM)-UCFL218D1**	5	—	122	205	102	11	—	13
FL218D1	—	**C(CM)-UCFL218-308D1**	13/64	—	4 13/16	8 1/16	4 1/32	24	—	29

Rhombus flanged unit, cast housing
Set screw type

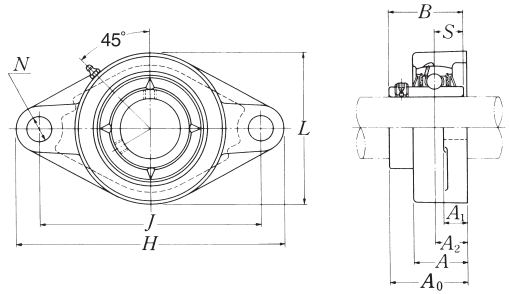

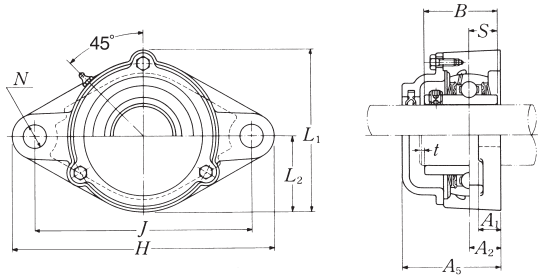

Cast dust cover type
Open end **C-UCFL···D1**
Closed end **CM-UCFL···D1**

Shaft dia. mm inch	Unit number (1)	Nominal dimensions mm inch H	J	A_2	A_1	A	N	L	A_0	B	S	Bolt size mm inch
25	UCFL305D1	150	113	16	13	29	19	80	39	38	15	M16
13/16	UCFL305-013D1											
7/8	UCFL305-014D1	5 29/32	4 29/64	5/8	1/2	1 5/32	3/4	3 5/32	1 17/32	1.4961	0.591	5/8
15/16	UCFL305-015D1											
1	UCFL305-100D1											
30	UCFL306D1	180	134	18	15	32	23	90	44	43	17	M20
1 1/16	UCFL306-101D1											
1 1/8	UCFL306-102D1	7 3/32	5 9/32	45/64	19/32	1 1/4	29/32	3 17/32	1 47/64	1.6929	0.669	3/4
1 3/16	UCFL306-103D1											
35	UCFL307D1	185	141	20	16	36	23	100	49	48	19	M20
1 1/4	UCFL307-104D1											
1 5/16	UCFL307-105D1	7 9/32	5 35/64	25/32	5/8	1 13/32	29/32	3 15/16	1 59/64	1.8898	0.748	3/4
1 3/8	UCFL307-106D1											
1 7/16	UCFL307-107D1											
40	UCFL308D1	200	158	23	17	40	23	112	56	52	19	M20
1 1/2	UCFL308-108D1	7 7/8	6 7/32	29/32	21/32	1 9/16	29/32	4 13/32	2 13/64	2.0472	0.748	3/4
1 9/16	UCFL308-109D1											
45	UCFL309D1	230	177	25	18	44	25	125	60	57	22	M22
1 5/8	UCFL309-110D1											
1 11/16	UCFL309-111D1	9 1/16	6 31/32	63/64	23/32	1 23/32	63/64	4 29/32	2 23/64	2.2441	0.866	7/8
1 3/4	UCFL309-112D1											
50	UCFL310D1	240	187	28	19	48	25	140	67	61	22	M22
1 13/16	UCFL310-113D1											
1 7/8	UCFL310-114D1	9 7/16	7 23/64	1 7/64	3/4	1 7/8	63/64	5 1/2	2 41/64	2.4016	0.866	7/8
1 15/16	UCFL310-115D1											

Note (1) These numbers indicate relubricatable type. If maintenance free type is needed, please order without suffix "D1".
Remarks Please refer to page **A21** for size of grease fitting.

Bearing number	Housing number	Unit number (1) cast dust cover type	Nominal dimensions mm inch t max.	A_5	L_1	L_2	Mass of unit kg lb UCFL	C(CM)
UC305D1	FL305D1	C(CM)-UCFL305D1	2	56	86	40	0.9	1.2
UC305-013D1	FL305D1	C(CM)-UCFL305-013D1						
UC305-014D1	FL305D1	C(CM)-UCFL305-014D1	5/64	2 7/32	3 3/8	1 9/16	2.0	2.6
UC305-015D1	FL305D1	C(CM)-UCFL305-015D1						
UC305-100D1	FL305D1	C(CM)-UCFL305-100D1						
UC306D1	FL306D1	C(CM)-UCFL306D1	2	60	101	45	1.4	1.7
UC306-101D1	FL306D1	C(CM)-UCFL306-101D1						
UC306-102D1	FL306D1	C(CM)-UCFL306-102D1	5/64	2 3/8	3 31/32	1 25/32	3.1	3.7
UC306-103D1	FL306D1	C(CM)-UCFL306-103D1						
UC307D1	FL307D1	C(CM)-UCFL307D1	3	68	110	50	1.7	2.1
UC307-104D1	FL307D1	C(CM)-UCFL307-104D1						
UC307-105D1	FL307D1	C(CM)-UCFL307-105D1	1/8	2 11/16	4 11/32	1 31/32	3.7	4.6
UC307-106D1	FL307D1	C(CM)-UCFL307-106D1						
UC307-107D1	FL307D1	C(CM)-UCFL307-107D1						
UC308D1	FL308D1	C(CM)-UCFL308D1	3	76	122	56	2.2	2.9
UC308-108D1	FL308D1	C(CM)-UCFL308-108D1	1/8	3	4 13/16	2 7/32	4.9	6.4
UC308-109D1	FL308D1	C(CM)-UCFL308-109D1						
UC309D1	FL309D1	C(CM)-UCFL309D1	3	80	135	62	3.0	3.8
UC309-110D1	FL309D1	C(CM)-UCFL309-110D1						
UC309-111D1	FL309D1	C(CM)-UCFL309-111D1	1/8	3 5/32	5 5/16	2 7/16	6.6	8.4
UC309-112D1	FL309D1	C(CM)-UCFL309-112D1						
UC310D1	FL310D1	C(CM)-UCFL310D1	3	88	152	70	4.1	5.0
UC310-113D1	FL310D1	C(CM)-UCFL310-113D1						
UC310-114D1	FL310D1	C(CM)-UCFL310-114D1	1/8	3 15/32	5 31/32	2 3/4	9.0	11
UC310-115D1	FL310D1	C(CM)-UCFL310-115D1						

Rhombus flanged unit, cast housing
Set screw type

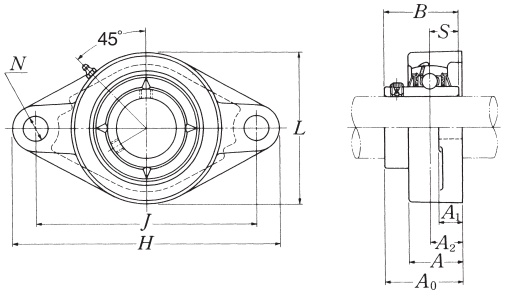

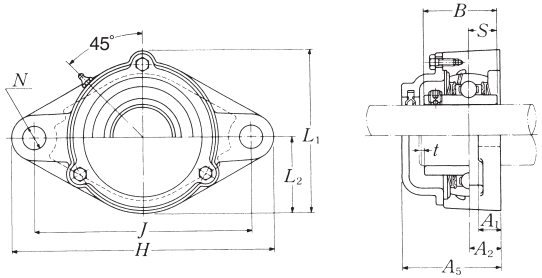

Cast dust cover type
Open end **C-UCFL···D1**
Closed end **CM-UCFL···D1**

Shaft dia. mm inch	Unit number (1)	Nominal dimensions mm inch H	J	A_2	A_1	A	N	L	A_0	B	S	Bolt size mm inch
55	UCFL311D1	250	198	30	20	52	25	150	71	66	25	M22
2	UCFL311-200D1											
2 1/16	UCFL311-201D1	9 27/32	7 51/64	1 3/16	25/32	2 1/16	63/64	5 29/32	2 51/64	2.5984	0.984	7/8
2 1/8	UCFL311-202D1											
2 3/16	UCFL311-203D1											
60	UCFL312D1	270	212	33	22	56	31	160	78	71	26	M27
2 1/4	UCFL312-204D1											
2 5/16	UCFL312-205D1	10 5/8	8 11/32	1 19/64	7/8	2 7/32	1 7/32	6 5/16	3 5/64	2.7953	1.024	1
2 3/8	UCFL312-206D1											
2 7/16	UCFL312-207D1											
65	UCFL313D1	295	240	33	25	58	31	175	78	75	30	M27
2 1/2	UCFL313-208D1	11 5/8	9 29/64	1 19/64	31/32	2 9/32	1 7/32	6 7/8	3 5/64	2.9528	1.181	1
2 9/16	UCFL313-209D1											
70	UCFL314D1	315	250	36	28	61	35	185	81	78	33	M30
2 5/8	UCFL314-210D1											
2 11/16	UCFL314-211D1	12 13/32	9 27/32	1 27/64	1 3/32	2 13/32	1 3/8	7 9/32	3 3/16	3.0709	1.299	1 1/8
2 3/4	UCFL314-212D1											
75	UCFL315D1	320	260	39	30	66	35	195	89	82	32	M30
2 13/16	UCFL315-213D1											
2 7/8	UCFL315-214D1	12 19/32	10 15/64	1 17/32	1 3/16	2 19/32	1 3/8	7 11/16	3 1/2	3.2283	1.260	1 1/8
2 15/16	UCFL315-215D1											
3	UCFL315-300D1											
80	UCFL316D1	355	285	38	32	68	38	210	90	86	34	M33
3 1/16	UCFL316-301D1											
3 1/8	UCFL316-302D1	13 31/32	11 7/32	1 1/2	1 1/4	2 11/16	1 1/2	8 9/32	3 35/64	3.3858	1.339	1 1/4
3 3/16	UCFL316-303D1											

Note (1) These numbers indicate relubricatable type. If maintenance free type is needed, please order without suffix "D1".
Remarks Please refer to page **A21** for size of grease fitting.

Bearing number	Housing number	Unit number (1) cast dust cover type	Nominal dimensions mm inch t max.	A_5	L_1	L_2	Mass of unit kg lb UCFL	C(CM)
UC311D1	FL311D1	C(CM)-UCFL311D1	4	92	162	75	4.6	5.9
UC311-200D1	FL311D1	C(CM)-UCFL311-200D1						
UC311-201D1	FL311D1	C(CM)-UCFL311-201D1	5/32	3 5/8	6 3/8	2 15/16	10	13
UC311-202D1	FL311D1	C(CM)-UCFL311-202D1						
UC311-203D1	FL311D1	C(CM)-UCFL311-203D1						
UC312D1	FL312D1	C(CM)-UCFL312D1	4	100	175	80	5.7	7.7
UC312-204D1	FL312D1	C(CM)-UCFL312-204D1						
UC312-205D1	FL312D1	C(CM)-UCFL312-205D1	5/32	3 15/16	6 7/8	3 5/32	13	17
UC312-206D1	FL312D1	C(CM)-UCFL312-206D1						
UC312-207D1	FL312D1	C(CM)-UCFL312-207D1						
UC313D1	FL313D1	C(CM)-UCFL313D1	4	103	189	88	7.6	9.9
UC313-208D1	FL313D1	C(CM)-UCFL313-208D1	5/32	4 1/16	7 7/16	3 15/32	17	22
UC313-209D1	FL313D1	C(CM)-UCFL313-209D1						
UC314D1	FL314D1	C(CM)-UCFL314D1	4	106	198	92	8.6	11
UC314-210D1	FL314D1	C(CM)-UCFL314-210D1						
UC314-211D1	FL314D1	C(CM)-UCFL314-211D1	5/32	4 3/16	7 25/32	3 5/8	19	24
UC314-212D1	FL314D1	C(CM)-UCFL314-212D1						
UC315D1	FL315D1	C(CM)-UCFL315D1	4	114	210	98	9.9	12
UC315-213D1	FL315D1	C(CM)-UCFL315-213D1						
UC315-214D1	FL315D1	C(CM)-UCFL315-214D1	5/32	4 1/2	8 9/32	3 27/32	22	26
UC315-215D1	FL315D1	C(CM)-UCFL315-215D1						
UC315-300D1	FL315D1	C(CM)-UCFL315-300D1						
UC316D1	FL316D1	C(CM)-UCFL316D1	4	116	222	105	13	16
UC316-301D1	FL316D1	C(CM)-UCFL316-301D1						
UC316-302D1	FL316D1	C(CM)-UCFL316-302D1	5/32	4 9/16	8 3/4	4 1/8	29	35
UC316-303D1	FL316D1	C(CM)-UCFL316-303D1						

Rhombus flanged unit, cast housing
Set screw type

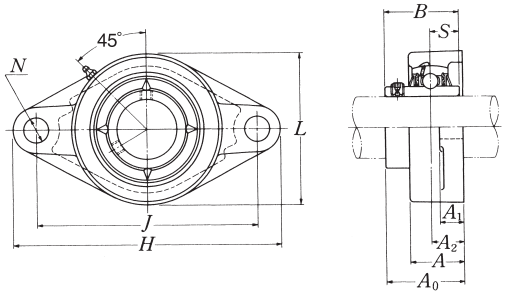

Shaft dia. mm inch	Unit number (1)	Nominal dimensions mm inch H	J	A_2	A_1	A	N	L	A_0	B	S	Bolt size mm inch
85	UCFL317D1	370	300	44	32	74	38	220	100	96	40	M33
3 1/4	UCFL317-304D1											
3 5/16	UCFL317-305D1	14 9/16	11 13/16	1 47/64	1 1/4	2 29/32	1 1/2	8 21/32	3 15/16	3.7795	1.575	1 1/4
3 7/16	UCFL317-307D1											
90	UCFL318D1	385	315	44	36	76	38	235	100	96	40	M33
3 7/16	UCFL318-307D1	15 5/32	12 13/32	1 47/64	1 13/32	3	1 1/2	9 1/4	3 15/16	3.7795	1.575	1 1/4
3 1/2	UCFL318-308D1											
95	UCFL319D1	405	330	59	40	94	41	250	121	103	41	M36
3 5/8	UCFL319-310D1											
3 11/16	UCFL319-311D1	15 15/16	12 63/64	2 21/64	1 9/16	3 11/16	1 39/64	9 27/32	4 49/64	4.0551	1.614	1 3/8
3 3/4	UCFL319-312D1											
100	UCFL320D1	440	360	59	40	94	44	270	125	108	42	M39
3 13/16	UCFL320-313D1											
3 7/8	UCFL320-314D1	17 5/16	14 11/64	2 21/64	1 9/16	3 11/16	1 47/64	10 5/8	4 59/64	4.2520	1.654	1 1/2
3 15/16	UCFL320-315D1											
4	UCFL320-400D1											
105	UCFL321D1	440	360	59	40	94	44	270	127	112	44	M39
110	UCFL322D1	470	390	60	42	96	44	300	131	117	46	M39
120	UCFL324D1	520	430	65	48	110	47	330	140	126	51	M42
130	UCFL326D1	550	460	65	50	115	47	360	146	135	54	M42
140	UCFL328D1	600	500	75	60	125	51	400	161	145	59	M45

Note (1) These numbers indicate relubricatable type. If maintenance free type is needed, please order without suffix "D1".
Remarks Please refer to page **A21** for size of grease fitting.

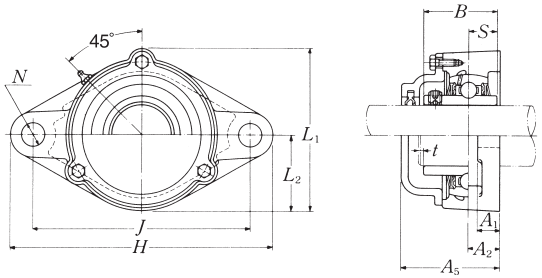

Cast dust cover type
Open end **C-UCFL···D1**
Closed end **CM-UCFL···D1**

Bearing number	Housing number	Unit number (1) cast dust cover type	Nominal dimensions mm inch t max.	A_5	L_1	L_2	Mass of unit kg lb UCFL	C(CM)
UC317D1	FL317D1	C(CM)-UCFL317D1	5	127	234	110	15	18
UC317-304D1	FL317D1	C(CM)-UCFL317-304D1						
UC317-305D1	FL317D1	C(CM)-UCFL317-305D1	13/64	5	9 7/32	4 11/32	33	40
UC317-307D1	FL317D1	C(CM)-UCFL317-307D1						
UC318D1	FL318D1	C(CM)-UCFL318D1	5	129	247	118	17	21
UC318-307D1	FL318D1	C(CM)-UCFL318-307D1	13/64	5 3/32	9 23/32	4 21/32	37	46
UC318-308D1	FL318D1	C(CM)-UCFL318-308D1						
UC319D1	FL319D1	C(CM)-UCFL319D1	5	149	260	125	22	26
UC319-310D1	FL319D1	C(CM)-UCFL319-310D1						
UC319-311D1	FL319D1	C(CM)-UCFL319-311D1	13/64	5 7/8	10 1/4	4 29/32	49	57
UC319-312D1	FL319D1	C(CM)-UCFL319-312D1						
UC320D1	FL320D1	C(CM)-UCFL320D1	5	154	280	135	26	31
UC320-313D1	FL320D1	C(CM)-UCFL320-313D1						
UC320-314D1	FL320D1	C(CM)-UCFL320-314D1	13/64	6 1/16	11 1/32	5 5/16	57	68
UC320-315D1	FL320D1	C(CM)-UCFL320-315D1						
UC320-400D1	FL320D1	C(CM)-UCFL320-400D1						
UC321D1	FL321D1	C(CM)-UCFL321D1	5	156	287	135	27	32
UC322D1	FL322D1	C(CM)-UCFL322D1	5	160	315	150	34	39
UC324D1	FL324D1	C(CM)-UCFL324D1	5	172	342	165	48	52
UC326D1	FL326D1	C(CM)-UCFL326D1	6	178	376	180	58	64
UC328D1	FL328D1	C(CM)-UCFL328D1	6	192	410	200	81	90

Rhombus flanged unit, cast housing
Set screw type

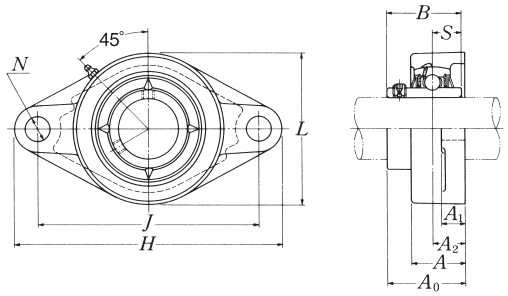

Shaft dia. mm / inch	Unit number (1)	Nominal dimensions mm / inch H	J	A_2	A_1	A	N	L	A_0	B	S	Bolt size mm / inch
25	UCFLX05D1	141	117	18	13	30	12	83	40.2	38.1	15.9	M10
13/16	UCFLX05-013D1											
7/8	UCFLX05-014D1	5 9/16	4 39/64	45/64	1/2	1 3/16	15/32	3 9/32	1 37/64	1.5000	0.626	3/8
15/16	UCFLX05-015D1											
1	UCFLX05-100D1											
30	UCFLX06D1	156	130	19	15	34	16	95	44.4	42.9	17.5	M14
1 1/16	UCFLX06-101D1											
1 1/8	UCFLX06-102D1	6 5/32	5 1/8	3/4	19/32	1 11/32	5/8	3 3/4	1 3/4	1.6890	0.689	1/2
1 3/16	UCFLX06-103D1											
1 1/4	UCFLX06-104D1											
35	UCFLX07D1	171	144	21	16	38	16	105	51.2	49.2	19	M14
1 5/16	UCFLX07-105D1											
1 3/8	UCFLX07-106D1	6 23/32	5 43/64	53/64	5/8	1 1/2	5/8	4 1/8	2 1/64	1.9370	0.748	1/2
1 7/16	UCFLX07-107D1											
40	UCFLX08D1	179	148	22	16	40	16	111	52.2	49.2	19	M14
1 1/2	UCFLX08-108D1	7 1/16	5 53/64	55/64	5/8	1 9/16	5/8	4 3/8	2 1/16	1.9370	0.748	1/2
1 9/16	UCFLX08-109D1											
45	UCFLX09D1	189	157	23	16	40	16	116	55.6	51.6	19	M14
1 5/8	UCFLX09-110D1											
1 11/16	UCFLX09-111D1	7 7/16	6 3/16	29/32	5/8	1 9/16	5/8	4 9/16	2 3/16	2.0315	0.748	1/2
1 3/4	UCFLX09-112D1											
1 13/16	UCFLX09-113D1											
50	UCFLX10D1	216	184	26	18	44	19	133	59.4	55.6	22.2	M16
1 7/8	UCFLX10-114D1											
1 15/16	UCFLX10-115D1	8 1/2	7 1/4	1 1/32	23/32	1 23/32	3/4	5 1/4	2 11/32	2.1890	0.874	5/8
2	UCFLX10-200D1											

Note (1) These numbers indicate relubricatable type. If maintenance free type is needed, please order without suffix "D1".
Remarks Please refer to page **A21** for size of grease fitting.

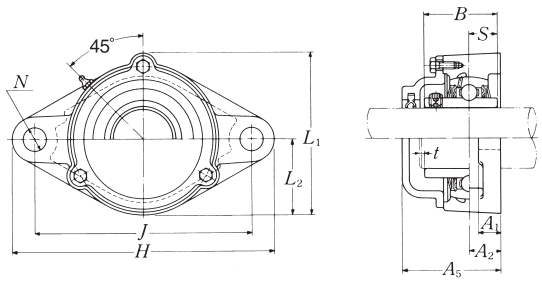

Cast dust cover type
Open end **C-UCFL···D1**
Closed end **CM-UCFL···D1**

Bearing number	Housing number	Unit number (1) cast dust cover type	Nominal dimensions mm / inch t max.	A_5	L_1	L_2	Mass of unit kg / lb UCFL	C(CM)
UCX05D1	FLX05D1	C(CM)-UCFLX05D1	2	56	86	41.5	1.0	1.2
UCX05-013D1	FLX05D1	C(CM)-UCFLX05-013D1						
UCX05-014D1	FLX05D1	C(CM)-UCFLX05-014D1	5/64	2 7/32	3 3/8	1 5/8	2.2	2.6
UCX05-015D1	FLX05D1	C(CM)-UCFLX05-015D1						
UCX05-100D1	FLX05D1	C(CM)-UCFLX05-100D1						
UCX06D1	FLX06D1	C(CM)-UCFLX06D1	2	59	98.5	47.5	1.5	1.8
UCX06-101D1	FLX06D1	C(CM)-UCFLX06-101D1						
UCX06-102D1	FLX06D1	C(CM)-UCFLX06-102D1	5/64	2 5/16	3 7/8	1 7/8	3.3	4.0
UCX06-103D1	FLX06D1	C(CM)-UCFLX06-103D1						
UC207-104D1	FLX06D1	C(CM)-UCFLX06-104D1						
UCX07D1	FLX07D1	C(CM)-UCFLX07D1	3	66	108.5	52.5	1.8	2.2
UCX07-105D1	FLX07D1	C(CM)-UCFLX07-105D1						
UCX07-106D1	FLX07D1	C(CM)-UCFLX07-106D1	1/8	2 19/32	4 9/32	2 1/16	4.0	4.9
UCX07-107D1	FLX07D1	C(CM)-UCFLX07-107D1						
UCX08D1	FLX08D1	C(CM)-UCFLX08D1	3	70	114.5	55.5	2.0	2.4
UCX08-108D1	FLX08D1	C(CM)-UCFLX08-108D1	1/8	2 3/4	4 1/4	2 3/16	4.4	5.3
UCX08-109D1	FLX08D1	C(CM)-UCFLX08-109D1						
UCX09D1	FLX09D1	C(CM)-UCFLX09D1	3	73	119.5	58	2.2	2.7
UCX09-110D1	FLX09D1	C(CM)-UCFLX09-110D1						
UCX09-111D1	FLX09D1	C(CM)-UCFLX09-111D1	1/8	2 7/8	4 23/32	2 9/32	4.9	6.0
UCX09-112D1	FLX09D1	C(CM)-UCFLX09-112D1						
UC210-113D1	FLX09D1	C(CM)-UCFLX09-113D1						
UCX10D1	FLX10D1	C(CM)-UCFLX10D1	3	76	133.5	66.5	3.0	3.6
UCX10-114D1	FLX10D1	C(CM)-UCFLX10-114D1						
UCX10-115D1	FLX10D1	C(CM)-UCFLX10-115D1	1/8	3	5 1/4	2 5/8	6.6	7.9
UC211-200D1	FLX10D1	C(CM)-UCFLX10-200D1						

Modified rhombus flanged unit, cast housing
Set screw type

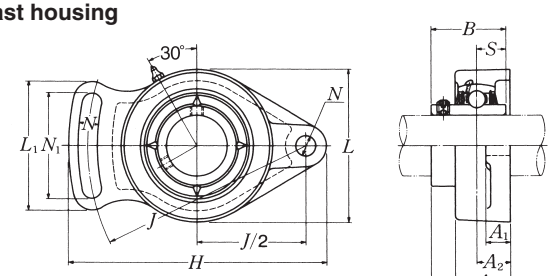

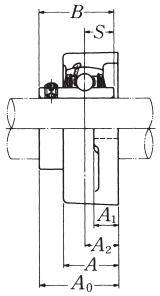

Shaft dia. mm / inch	Unit number (1)	Nominal dimensions mm / inch H	J	A_2	A_1	A	N	N_1	L	L_1	A_0	B	S	Bolt size mm / inch
12	UCFA201D1	98	78	15	12	25.5	10	40	60	50	33.3	31	12.7	M8
1/2	UCFA201-008D1	3 27/32	3 1/16	19/32	15/32	1	25/64	1 9/16	2 3/8	1 31/32	1 5/16	1.2205	0.500	5/16
15	UCFA202D1	98	78	15	12	25.5	10	40	60	50	33.3	31	12.7	M8
9/16	UCFA202-009D1	3 27/32	3 1/16	19/32	15/32	1	25/64	1 9/16	2 3/8	1 31/32	1 5/16	1.2205	0.500	5/16
5/8	UCFA202-010D1													
17	UCFA203D1	98	78	15	12	25.5	10	40	60	50	33.3	31	12.7	M8
11/16	UCFA203-011D1	3 27/32	3 1/16	19/32	15/32	1	25/64	1 9/16	2 3/8	1 31/32	1 5/16	1.2205	0.500	5/16
20	UCFA204D1	98	78	15	12	25.5	10	40	60	50	33.3	31	12.7	M8
3/4	UCFA204-012D1	3 27/32	3 1/16	19/32	15/32	1	25/64	1 9/16	2 3/8	1 31/32	1 5/16	1.2205	0.500	5/16
25	UCFA205D1	124	96	15	14	26.5	13	49	70	64	34.8	34.1	14.3	M10
13/16	UCFA205-013D1	4 7/8	3 25/32	19/32	9/16	1 1/32	33/64	1 15/16	2 3/4	2 17/32	1 3/8	1.3425	0.563	3/8
7/8	UCFA205-014D1													
15/16	UCFA205-015D1													
1	UCFA205-100D1													
30	UCFA206D1	141	115	18	14	31	13	53	80	68	40.2	38.1	15.9	M10
1 1/16	UCFA206-101D1	5 9/16	4 17/32	45/64	9/16	1 7/32	33/64	2 3/32	3 5/32	2 11/16	1 37/64	1.5000	0.626	3/8
1 1/8	UCFA206-102D1													
1 3/16	UCFA206-103D1													
1 1/4	UCFA206-104D1													
35	UCFA207D1	155	128	20	16	34	15	60	90	75	45.4	42.9	17.5	M12
1 1/4	UCFA207-104D1	6 3/32	5 1/32	25/32	5/8	1 11/32	19/32	2 3/8	3 17/32	2 15/16	1 25/32	1.6890	0.689	7/16
1 5/16	UCFA207-105D1													
1 3/8	UCFA207-106D1													
1 7/16	UCFA207-107D1													
40	UCFA208D1	171	142	22	16	36	15	69	100	84	52.2	49.2	19	M12
1 1/2	UCFA208-108D1	6 23/32	5 19/32	55/64	5/8	1 13/32	19/32	2 23/32	3 15/16	3 5/16	2 1/16	1.9370	0.748	7/16
1 9/16	UCFA208-109D1													

Note (1) These numbers indicate relubricatable type. If maintenance free type is needed, please order without suffix "D1".
Remarks Please refer to page **A21** for size of grease fitting.

Bearing number	Housing number	Mass of unit kg / lb
UC201D1	FA204D1	0.5
UC201-008D1	FA204D1	1.1
UC202D1	FA204D1	0.5
UC202-009D1	FA204D1	1.1
UC202-010D1	FA204D1	
UC203D1	FA204D1	0.5
UC203-011D1	FA204D1	1.1
UC204D1	FA204D1	0.5
UC204-012D1	FA204D1	1.1
UC205D1	FA205D1	0.7
UC205-013D1	FA205D1	1.5
UC205-014D1	FA205D1	
UC205-015D1	FA205D1	
UC205-100D1	FA205D1	
UC206D1	FA206D1	0.9
UC206-101D1	FA206D1	2.0
UC206-102D1	FA206D1	
UC206-103D1	FA206D1	
UC206-104D1	FA206D1	
UC207D1	FA207D1	1.2
UC207-104D1	FA207D1	2.6
UC207-105D1	FA207D1	
UC207-106D1	FA207D1	
UC207-107D1	FA207D1	
UC208D1	FA208D1	1.5
UC208-108D1	FA208D1	3.3
UC208-109D1	FA208D1	

Modified rhombus flanged unit, cast housing
Set screw type

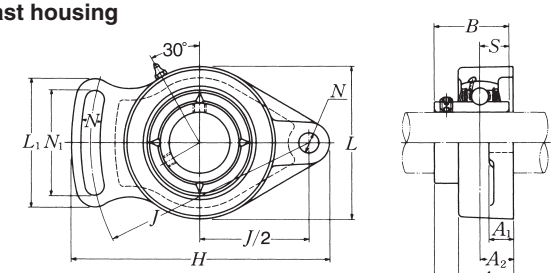

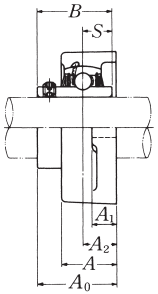

Shaft dia. mm / inch	Unit number (1)	Nominal dimensions mm / inch H	J	A_2	A_1	A	N	N_1	L	L_1	A_0	B	S	Bolt size mm / inch	Bearing number	Housing number	Mass of unit kg / lb
45	UCFA209D1	179	146	22	18	38	17	72	110	88	52.2	49.2	19	M14	UC209D1	FA209D1	1.9
1 5/8	UCFA209-110D1														UC209-110D1	FA209D1	
1 11/16	UCFA209-111D1	7 1/16	5 3/4	55/64	23/32	1 1/2	43/64	2 27/32	4 11/32	3 15/32	2 1/16	1.9370	0.748	1/2	UC209-111D1	FA209D1	4.2
1 3/4	UCFA209-112D1														UC209-112D1	FA209D1	
50	UCFA210D1	189	155	22	18	40	17	75	115	92	54.6	51.6	19	M14	UC210D1	FA210D1	2.2
1 13/16	UCFA210-113D1														UC210-113D1	FA210D1	
1 7/8	UCFA210-114D1	7 7/16	6 3/32	55/64	23/32	1 9/16	43/64	2 15/16	4 17/32	3 5/8	2 5/32	2.0315	0.748	1/2	UC210-114D1	FA210D1	4.9
1 15/16	UCFA210-115D1														UC210-115D1	FA210D1	
2	UCFA210-200D1														UC210-200D1	FA210D1	
55	UCFA211D1	216	182	26	20	43	17	85	130	102	59.4	55.6	22.2	M14	UC211D1	FA211D1	2.9
2	UCFA211-200D1														UC211-200D1	FA211D1	
2 1/16	UCFA211-201D1	8 1/8	7 5/32	1 1/32	25/32	1 11/16	43/64	3 11/32	5 1/8	4 1/32	2 11/32	2.1890	0.874	1/2	UC211-201D1	FA211D1	6.4
2 1/8	UCFA211-202D1														UC211-202D1	FA211D1	
2 3/16	UCFA211-203D1														UC211-203D1	FA211D1	

Note (1) These numbers indicate relubricatable type. If maintenance free type is needed, please order without suffix "D1".
Remarks Please refer to page **A21** for size of grease fitting.

Modified flanged unit, cast housing
Set screw type

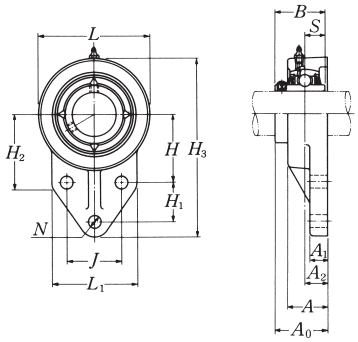

Shaft dia. mm / inch	Unit number (1)	Nominal dimensions (mm / inch) H_3	J	A_2	A_1	A	N	H	H_1	L_1	H_2	L	A_0	B	S
12	UCFH201D1	110	32	15	13	25.5	10	42	27	52	52	62	33.3	31	12.7
1/2	UCFH201-008D1	4 11/32	1 17/64	19/32	1/2	1	25/64	1 21/32	1 1/16	2 1/16	2 1/16	2 7/16	1 5/16	1.2205	0.500
15	UCFH202D1	110	32	15	13	25.5	10	42	27	52	52	62	33.3	31	12.7
9/16	UCFH202-009D1	4 11/32	1 17/64	19/32	1/2	1	25/64	1 21/32	1 1/16	2 1/16	2 1/16	2 7/16	1 5/16	1.2205	0.500
5/8	UCFH202-010D1														
17	UCFH203D1	110	32	15	13	25.5	10	42	27	52	52	62	33.3	31	12.7
11/16	UCFH203-011D1	4 11/32	1 17/64	19/32	1/2	1	25/64	1 21/32	1 1/16	2 1/16	2 1/16	2 7/16	1 5/16	1.2205	0.500
20	UCFH204D1	110	32	15	13	25.5	10	42	27	52	52	62	33.3	31	12.7
3/4	UCFH204-012D1	4 11/32	1 17/64	19/32	1/2	1	25/64	1 21/32	1 1/16	2 1/16	2 1/16	2 7/16	1 5/16	1.2205	0.500
25	UCFH205D1	116	34	16	13	27	10	45	27	56	52	68	35.8	34.1	14.3
13/16	UCFH205-013D1	4 9/16	1 11/32	5/8	1/2	1 1/16	25/64	1 49/64	1 1/16	2 7/32	2 1/16	2 11/16	1 13/32	1.3425	0.563
7/8	UCFH205-014D1														
15/16	UCFH205-015D1														
1	UCFH205-100D1														
30	UCFH206D1	130	40	18	13	31	10	50	29	65	55	78	40.2	38.1	15.9
1 1/16	UCFH206-101D1	5 1/8	1 37/64	45/64	1/2	1 7/32	25/64	1 31/32	1 9/64	2 9/16	2 5/32	3 1/16	1 37/64	1.5000	0.626
1 1/8	UCFH206-102D1														
1 3/16	UCFH206-103D1														
1 1/4	UCFH206-104D1														
35	UCFH207D1	144	46	19	15	34	10	55	32	70	62	90	44.4	42.9	17.5
1 1/4	UCFH207-104D1	5 21/32	1 13/16	3/4	19/32	1 11/32	25/64	2 11/64	1 17/64	2 3/4	2 7/16	3 17/32	1 3/4	1.6890	0.689
1 5/16	UCFH207-105D1														
1 3/8	UCFH207-106D1														
1 7/16	UCFH207-107D1														

Note (1) These numbers indicate relubricatable type. If maintenance free type is needed, please order without suffix "D1".
Remarks Please refer to page **A21** for size of grease fitting.

Bolt size mm / inch	Bearing number	Housing number	Mass of unit kg / lb
M8	UC201D1	FH204D1	0.6
5/16	UC201-008D1	FH204D1	1.3
M8	UC202D1	FH204D1	0.6
5/16	UC202-009D1	FH204D1	1.3
	UC202-010D1	FH204D1	
M8	UC203D1	FH204D1	0.6
5/16	UC203-011D1	FH204D1	1.3
M8	UC204D1	FH204D1	0.6
5/16	UC204-012D1	FH204D1	1.3
M8	UC205D1	FH205D1	0.7
5/16	UC205-013D1	FH205D1	1.5
	UC205-014D1	FH205D1	
	UC205-015D1	FH205D1	
	UC205-100D1	FH205D1	
M8	UC206D1	FH206D1	0.9
5/16	UC206-101D1	FH206D1	2.0
	UC206-102D1	FH206D1	
	UC206-103D1	FH206D1	
	UC206-104D1	FH206D1	
M8	UC207D1	FH207D1	1.3
5/16	UC207-104D1	FH207D1	2.9
	UC207-105D1	FH207D1	
	UC207-106D1	FH207D1	
	UC207-107D1	FH207D1	

Modified flanged unit, cast housing
Set screw type

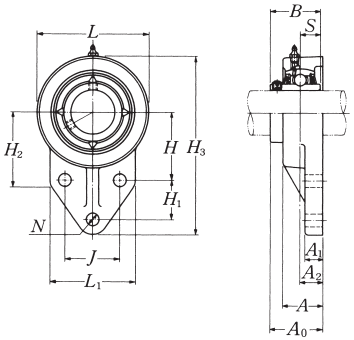

Shaft dia. mm inch	Unit number (1)	Nominal dimensions mm inch H_3	J	A_2	A_1	A	N	H	H_1	L_1	H_2	L	A_0	B	S
40	UCFH208D1	164	50	21	16	36	12	60	41	78	72	100	51.2	49.2	19
1 1/2	UCFH208-108D1	6 15/32	1 31/32	53/64	5/8	1 13/32	15/32	2 23/64	1 39/64	3 1/16	2 27/32	3 15/16	2 1/64	1.9370	0.748
1 9/16	UCFH208-109D1														
45	UCFH209D1	174	54	22	18	38	12	65	43	80	76	106	52.2	49.2	19
1 5/8	UCFH209-110D1														
1 11/16	UCFH209-111D1	6 27/32	2 1/8	55/64	23/32	1 1/2	15/32	2 9/16	1 11/16	3 5/32	3	4 3/16	2 1/16	1.9370	0.748
1 3/4	UCFH209-112D1														
50	UCFH210D1	184	58	22	18	40	12	68	46	86	82	112	54.6	51.6	19
1 13/16	UCFH210-113D1														
1 7/8	UCFH210-114D1	7 1/4	2 9/32	55/64	23/32	1 9/16	15/32	2 43/64	1 13/16	3 3/8	3 7/32	4 13/32	2 5/32	2.0315	0.748
1 15/16	UCFH210-115D1														
2	UCFH210-200D1														

Bolt size mm inch	Bearing number	Housing number	Mass of unit kg lb
M10	UC208D1	FH208D1	1.8
	UC208-108D1	FH208D1	
3/8			4.0
	UC208-109D1	FH208D1	
M10	UC209D1	FH209D1	2.1
	UC209-110D1	FH209D1	
3/8	UC209-111D1	FH209D1	4.6
	UC209-112D1	FH209D1	
M10	UC210D1	FH210D1	2.4
	UC210-113D1	FH210D1	
	UC210-114D1	FH210D1	
3/8	UC210-115D1	FH210D1	5.3
	UC210-200D1	FH210D1	

Note (1) These numbers indicate relubricatable type. If maintenance free type is needed, please order without suffix "D1".
Remarks Please refer to page **A21** for size of grease fitting.

Light rhombus flanged unit, cast housing
Set screw type

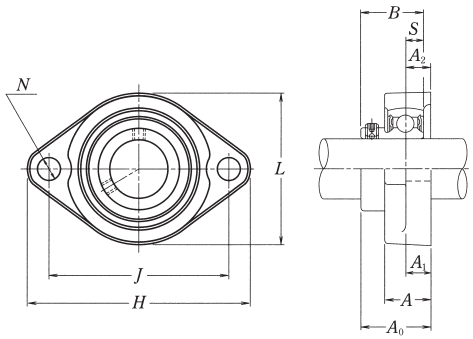

Shaft dia. mm / inch	Unit number (1)	Nominal dimensions mm / inch H	J	A_2	A_1	A	N	L	A_0	B	S	Bolt size mm / inch
12	ASFB201	81	63.5	9.5	9.5	18	7	56	25.5	22	6	M6
1/2	ASFB201-008	3 3/16	2 1/2	3/8	3/8	23/32	9/32	2 7/32	1	0.8661	0.236	1/4
15	ASFB202	81	63.5	9.5	9.5	18	7	56	25.5	22	6	M6
9/16	ASFB202-009	3 3/16	2 1/2	3/8	3/8	23/32	9/32	2 7/32	1	0.8661	0.236	1/4
5/8	ASFB202-010											
17	ASFB203	81	63.5	9.5	9.5	18	7	56	25.5	22	6	M6
1/2	ASFB203-011	3 3/16	2 1/2	3/8	3/8	23/32	9/32	2 7/32	1	0.8661	0.236	1/4
20	ASFB204	90	71.5	11	11	20	10	61	29	25	7	M8
3/4	ASFB204-012	3 17/32	2 13/16	7/16	7/16	25/32	25/64	2 13/32	1 9/64	0.9843	0.276	5/16
25	ASFB205	95	76	11	11	20	10	64	30.5	27	7.5	M8
13/16	ASFB205-013	3 3/4	2 63/64	7/16	7/16	25/32	25/64	2 17/32	1 13/64	1.0630	0.295	5/16
7/8	ASFB205-014											
15/16	ASFB205-015											
1	ASFB205-100											
30	ASFB206	113	90.5	12	12	22.5	12	76	33	29	8	M10
1 1/16	ASFB206-101	4 7/16	3 9/16	15/32	15/32	7/8	15/32	3	1 19/64	1.1417	0.315	3/8
1 1/8	ASFB206-102											
1 3/16	ASFB206-103											
1 1/4	ASFB206-104											
35	ASFB207	122	100	11	13	24	12	89	36.5	34	8.5	M10
1 1/4	ASFB207-104	4 13/16	3 15/16	7/16	1/2	15/16	15/32	3 1/2	1 7/16	1.3386	0.335	3/8
1 5/16	ASFB207-105											
1 3/8	ASFB207-106											
1 7/16	ASFB207-107											

Note (1) If relubricatable type is needed, please order with suffix "D1".

Bearing number	Housing number	Mass of unit kg / lb
AS201	FB201	0.3
AS201-008	FB201	0.7
AS202	FB201	0.3
AS202-009	FB201	0.7
AS202-010	FB201	
AS203	FB201	0.2
AS203-011	FB201	0.4
AS204	FB204	0.3
AS204-012	FB204	0.7
AS205	FB205	0.3
AS205-013	FB205	0.7
AS205-014	FB205	
AS205-015	FB205	
AS205-100	FB205	
AS206	FB206	0.5
AS206-101	FB206	1.1
AS206-102	FB206	
AS206-103	FB206	
AS206-104	FB206	
AS207	FB207	0.8
AS207-104	FB207	1.8
AS207-105	FB207	
AS207-106	FB207	
AS207-107	FB207	

Light rhombus flanged unit, cast housing
Set screw type

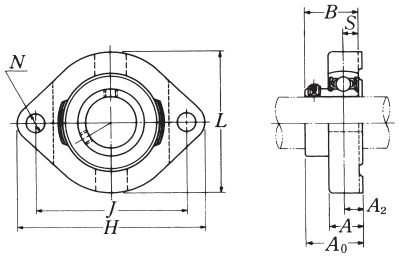

Shaft dia. mm / inch	Unit number (1)	Nominal dimensions mm / inch H	J	A_2	A	N	L	A_0	B	S	Bolt size mm / inch
12	ASFD201	81	63	8.5	15	7	59	24.5	22	6	M6
1/2	ASFD201-008	3 3/16	2 31/64	21/64	19/32	9/32	2 5/16	31/32	0.8661	0.236	1/4
15	ASFD202	81	63	8.5	15	7	59	24.5	22	6	M6
9/16	ASFD202-009	3 3/16	2 31/64	21/64	19/32	9/32	2 5/16	31/32	0.8661	0.236	1/4
5/8	ASFD202-010										
17	ASFD203	81	63	8.5	15	7	59	24.5	22	6	M6
11/16	ASFD203-011	3 3/16	2 31/64	21/64	19/32	9/32	2 5/16	31/32	0.8661	0.236	1/4
20	ASFD204	90	71	9.5	17	10	67	27.5	25	7	M8
3/4	ASFD204-012	3 17/32	2 51/64	3/8	21/32	25/64	2 5/8	1 5/64	0.9843	0.276	5/16
25	ASFD205	95	76	9.5	17	10	71	29	27	7.5	M8
13/16	ASFD205-013	3 3/4	2 63/64	3/8	21/32	25/64	2 25/32	1 9/64	1.0630	0.295	5/16
7/8	ASFD205-014										
15/16	ASFD205-015										
1	ASFD205-100										
30	ASFD206	113	90	12	21	12	84	33	29	8	M10
1 1/16	ASFD206-101	4 7/16	3 35/64	15/32	13/16	15/32	3 5/16	1 19/64	1.1417	0.315	3/8
1 1/8	ASFD206-102										
1 3/16	ASFD206-103										
1 1/4	ASFD206-104										
35	ASFD207	125	100	12.5	22	12	94	38	34	8.5	M10
1 1/4	ASFD207-104	4 29/32	3 15/16	31/64	7/8	15/32	3 11/16	1 1/2	1.3386	0.335	3/8
1 5/16	ASFD207-105										
1 3/8	ASFD207-106										
1 7/16	ASFD207-107										
40	ASFD208	148	119	14.5	25	13.5	104	43.5	38	9	M12
1 1/2	ASFD208-108	5 13/16	4 11/16	37/64	31/32	17/32	4 3/32	1 23/32	1.4961	0.354	9/16
1 9/16	ASFD208-109										

Note (1) If relubricatable type is needed, please order with suffix "A-" "D1". Example: A-ASFD201D1

Bearing number	Housing number	Mass of unit kg / lb
AS201	FD201	0.3
AS201-008	FD201	0.7
AS202	FD201	0.3
AS202-009	FD201	0.7
AS202-010	FD201	
AS203	FD201	0.3
AS203-011	FD201	0.7
AS204	FD204	0.4
AS204-012	FD204	0.9
AS205	FD205	0.5
AS205-013	FD205	1.1
AS205-014	FD205	
AS205-015	FD205	
AS205-100	FD205	
AS206	FD206	0.8
AS206-101	FD206	1.8
AS206-102	FD206	
AS206-103	FD206	
AS206-104	FD206	
AS207	FD207	0.9
AS207-104	FD207	2.0
AS207-105	FD207	
AS207-106	FD207	
AS207-107	FD207	
AS208	FD208	1.3
AS208-108	FD208	2.9
AS208-109	FD208	

Round flanged unit, pressed steel housing
Set screw type

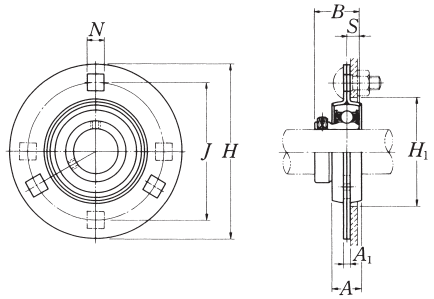

Shaft dia. mm / inch	Unit number	Nominal dimensions mm / inch: H	J	A_1	N (1)	A	B	S	H_1 min.	Bolt size mm / inch	Max. load (2) recommended N / lbf: radial	axial	Bearing number	Housing number	Mass of unit kg / lb
12	ASPF201	81	63.5	4	7.1	14	22	6	49	M6	2 700	1 350	AS201	PF203	0.2
1/2	ASPF201-008	3 3/16	2 1/2	0.157	9/32	9/16	0.8661	0.236	1 15/16	1/4	600	300	AS201-008	PF203	0.4
15	ASPF202	81	63.5	4	7.1	14	22	6	49	M6	2 700	1 350	AS202	PF203	0.2
9/16	ASPF202-009	3 3/16	2 1/2	0.157	9/32	9/16	0.8661	0.236	1 15/16	1/4	600	300	AS202-009	PF203	0.4
5/8	ASPF202-010												AS202-010	PF203	
17	ASPF203	81	63.5	4	7.1	14	22	6	49	M6	2 700	1 350	AS203	PF203	0.2
11/16	ASPF203-011	3 3/16	2 1/2	0.157	9/32	9/16	0.8661	0.236	1 15/16	1/4	600	300	AS203-011	PF203	0.4
20	ASPF204	90	71.5	4	9	16	25	7	56	M8	3 000	1 500	AS204	PF204	0.2
3/4	ASPF204-012	3 35/64	2 13/16	0.157	23/64	5/8	0.9843	0.276	2 7/32	5/16	660	330	AS204-012	PF204	0.4
25	ASPF205	95	76	4	9	18	27	7.5	60	M8	4 000	2 000	AS205	PF205	0.3
13/16	ASPF205-013	3 3/4	2 63/64	0.157	23/64	23/32	1.0630	0.295	2 3/8	5/16	880	440	AS205-013	PF205	0.7
7/8	ASPF205-014												AS205-014	PF205	
15/16	ASPF205-015												AS205-015	PF205	
1	ASPF205-100												AS205-100	PF205	
30	ASPF206	113	90.5	5.2	11	18	29	8	71	M10	5 000	2 500	AS206	PF206	0.4
1 1/16	ASPF206-101	4 7/16	3 9/16	0.205	7/16	23/32	1.1417	0.315	2 13/16	3/8	1 100	550	AS206-101	PF206	0.9
1 1/8	ASPF206-102												AS206-102	PF206	
1 3/16	ASPF206-103												AS206-103	PF206	
1 1/4	ASPF206-104												AS206-104	PF206	
35	ASPF207	122	100	5.2	11	20	34	8.5	81	M10	6 000	3 000	AS207	PF207	0.6
1 1/4	ASPF207-104	4 13/16	3 15/16	0.205	7/16	25/32	1.3386	0.335	3 3/16	3/8	1 300	650	AS207-104	PF207	1.3
1 5/16	ASPF207-105												AS207-105	PF207	
1 3/8	ASPF207-106												AS207-106	PF207	
1 7/16	ASPF207-107												AS207-107	PF207	
40	ASPF208	148	119	6.8	13.5	21	38	9	91	M12	7 000	3 500	AS208	PF208	0.9
1 1/2	ASPF208-108	5 13/16	4 11/16	0.268	17/32	13/16	1.4961	0.354	3 19/32	1/2	1 500	750	AS208-108	PF208	2.0
1 9/16	ASPF208-109												AS208-109	PF208	

Notes (1) ASPF208 has four bolt holes.
(2) The permissible load only applies in applications where the load is stable and the speed is 2400 min^{-1} or less.

Round flanged unit, pressed steel housing with rubber ring
Set screw type

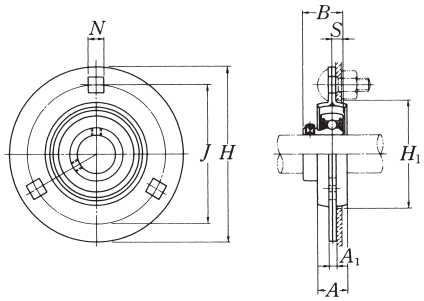

Shaft dia. mm / inch	Unit number	Nominal dimensions mm / inch H	J	A_1	N	A	B	S	H_1 min.	Bolt size mm / inch	Max. load (1) recommended N / lbf radial	axial	Bearing number	Housing number rubber ring	steel	Mass of unit kg / lb
12	ASRPF201	90	71.5	4	9	16	22	6	56	M8	1 000	200	AS201	R201	PF204	0.2
1/2	ASRPF201-008	3 35/64	2 13/16	0.157	23/64	5/8	0.8661	0.236	2 7/32	5/16	220	40	AS201-008	R201	PF204	0.4
15	ASRPF202	90	71.5	4	9	16	22	6	56	M8	1 000	200	AS202	R201	PF204	0.2
9/16	ASRPF202-009	3 35/64	2 13/16	0.157	23/64	5/8	0.8661	0.236	2 7/32	5/16	220	40	AS202-009	R201	PF204	0.4
5/8	ASRPF202-010												AS202-010	R201	PF204	
17	ASRPF203	90	71.5	4	9	16	22	6	56	M8	1 000	200	AS203	R201	PF204	0.2
11/16	ASRPF203-011	3 35/64	2 13/16	0.157	23/64	5/8	0.8661	0.236	2 7/32	5/16	220	40	AS203-011	R201	PF204	0.4
20	ASRPF204	95	76	4	9	18	25	7	60	M8	1 150	200	AS204	R204	PF205	0.2
3/4	ASRPF204-012	3 3/4	2 63/64	0.157	23/64	23/32	0.9843	0.276	2 3/8	5/16	250	40	AS204-012	R204	PF205	0.4
25	ASRPF205	113	90.5	5.2	11	18	27	7.5	71	M10	1 300	200	AS205	R205	PF206	0.3
13/16	ASRPF205-013	4 7/16	3 9/16	0.205	7/16	23/32	1.0630	0.295	2 13/16	3/8	280	40	AS205-013	R205	PF206	0.7
7/8	ASRPF205-014												AS205-014	R205	PF206	
15/16	ASRPF205-015												AS205-015	R205	PF206	
1	ASRPF205-100												AS205-100	R205	PF206	
30	ASRPF206	122	100	5.2	11	20	29	8	81	M10	1 500	200	AS206	R206	PF207	0.5
1 1/16	ASRPF206-101	4 13/16	3 15/16	0.205	7/16	25/32	1.1417	0.315	3 3/16	3/8	330	40	AS206-101	R206	PF207	1.1
1 1/8	ASRPF206-102												AS206-102	R206	PF207	
1 3/16	ASRPF206-103												AS206-103	R206	PF207	
1 1/4	ASRPF206-104												AS206-104	R206	PF207	

Note (1) The permissible load only applies in applications where the load is stable and the speed is 2400 min^{-1} or less.
Remarks When an anti-vibration rubber ring is used, the self alignment capability will be reduce.

Rhombus flanged unit, pressed steel housing
Set screw type

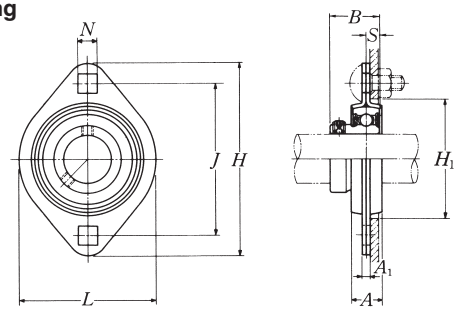

Shaft dia. mm / inch	Unit number	Nominal dimensions mm / inch H	J	A_1	N	A	L	B	S	H_1 min.	Bolt size mm / inch	Max. load (1) recommended N / lbf radial	axial	Bearing number	Housing number	Mass of unit kg / lb
12	ASPFL201	81	63.5	4	7.1	14	59	22	6	49	M6	2 700	1 350	AS201	PFL203	0.2
1/2	ASPFL201-008	3 3/16	2 1/2	0.157	9/32	9/16	2 5/16	0.8661	0.236	1 15/16	1/4	600	300	AS201-008	PFL203	0.4
15	ASPFL202	81	63.5	4	7.1	14	59	22	6	49	M6	2 700	1 350	AS202	PFL203	0.2
9/16	ASPFL202-009	3 3/16	2 1/2	0.157	9/32	9/16	2 5/16	0.8661	0.236	1 15/16	1/4	600	300	AS202-009	PFL203	0.4
5/8	ASPFL202-010													AS202-010	PFL203	
17	ASPFL203	81	63.5	4	7.1	14	59	22	6	49	M6	2 700	1 350	AS203	PFL203	0.2
11/16	ASPFL203-011	3 3/16	2 1/2	0.157	9/32	9/16	2 5/16	0.8661	0.236	1 15/16	1/4	600	300	AS203-011	PFL203	0.4
20	ASPFL204	90	71.5	4	9	16	67	25	7	56	M8	3 000	1 500	AS204	PFL204	0.2
3/4	ASPFL204-012	3 35/64	2 13/16	0.157	23/64	5/8	2 5/8	0.9843	0.276	27/32	5/16	660	330	AS204-012	PFL204	0.4
25	ASPFL205	95	76	4	9	18	71	27	7.5	60	M8	4 000	2 000	AS205	PFL205	0.3
13/16	ASPFL205-013	3 3/4	2 63/64	0.157	23/64	23/32	2 25/32	1.0630	0.295	2 3/8	5/16	880	440	AS205-013	PFL205	0.7
7/8	ASPFL205-014													AS205-014	PFL205	
15/16	ASPFL205-015													AS205-015	PFL205	
1	ASPFL205-100													AS205-100	PFL205	
30	ASPFL206	113	90.5	5.2	11	18	84	29	8	71	M10	5 000	2 500	AS206	PFL206	0.4
1 1/16	ASPFL206-101	4 7/16	3 9/16	0.205	7/16	23/32	3 5/16	1.1417	0.315	2 13/16	3/8	1 100	550	AS206-101	PFL206	0.9
1 1/8	ASPFL206-102													AS206-102	PFL206	
1 3/16	ASPFL206-103													AS206-103	PFL206	
1 1/4	ASPFL206-104													AS206-104	PFL206	
35	ASPFL207	122	100	5.2	11	20	94	34	8.5	81	M10	6 000	3 000	AS207	PFL207	0.6
1 1/4	ASPFL207-104	4 13/16	3 15/16	0.205	7/16	25/32	3 11/16	1.3386	0.335	3 3/16	3/8	1 300	650	AS207-104	PFL207	1.3
1 5/16	ASPFL207-105													AS207-105	PFL207	
1 3/8	ASPFL207-106													AS207-106	PFL207	
1 7/16	ASPFL207-107													AS207-107	PFL207	
40	ASPFL208	148	119	6.8	13.5	21	100	38	9	91	M12	6 000	3 000	AS208	PFL208	0.8
1 1/2	ASPFL208-108	5 53/64	4 11/16	0.268	17/32	53/64	3 15/16	1.4961	0.354	3 19/32	1/2	1 300	650	AS208-108	PFL208	1.8
1 9/16	ASPFL208-109													AS208-109	PFL208	

Note (1) The permissible load only applies in applications where the load is stable and the speed is 2400 min^{-1} or less.

Hanger unit, cast housing
Set screw type

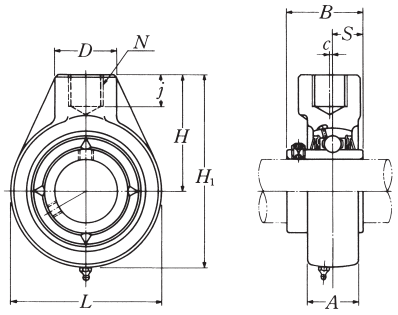

Shaft dia. mm / inch	Unit number (1)	Nominal dimensions mm / inch L	H_1	c	A	H	N	D	j	B	S
12	UCHB201D1	64	96	0	21	64	Rp3/4	40	19	31	12.7
1/2	UCHB201-008D1	2 17/32	3 25/32	0	13/16	2 33/64	Rp3/4	1 9/16	3/4	1.2205	0.500
15	UCHB202D1	64	96	0	21	64	Rp3/4	40	19	31	12.7
9/16	UCHB202-009D1	2 17/32	3 25/32	0	13/16	2 33/64	Rp3/4	1 9/16	3/4	1.2205	0.500
5/8	UCHB202-010D1										
17	UCHB203D1	64	96	0	21	64	Rp3/4	40	19	31	12.7
11/16	UCHB203-011D1	2 17/32	3 25/32	0	13/16	2 33/64	Rp3/4	1 9/16	3/4	1.2205	0.500
20	UCHB204D1	64	96	0	21	64	Rp3/4	40	19	31	12.7
3/4	UCHB204-012D1	2 17/32	3 25/32	0	13/16	2 33/64	Rp3/4	1 9/16	3/4	1.2205	0.500
25	UCHB205D1	78	103	0	24	64	Rp3/4	40	19	34.1	14.3
13/16	UCHB205-013D1	3 1/16	4 1/16	0	15/16	2 33/64	Rp3/4	1 9/16	3/4	1.3425	0.563
7/8	UCHB205-014D1										
15/16	UCHB205-015D1										
1	UCHB205-100D1										
30	UCHB206D1	78	103	0	28	64	Rp3/4	40	19	38.1	15.9
1 1/16	UCHB206-101D1	3 1/16	4 1/16	0	1 3/32	2 33/64	Rp3/4	1 9/16	3/4	1.5000	0.626
1 1/8	UCHB206-102D1										
1 3/16	UCHB206-103D1										
1 1/4	UCHB206-104D1										
35	UCHB207D1	92	116	0	30	70	Rp3/4	40	19	42.9	17.5
1 1/4	UCHB207-104D1	3 5/8	4 9/16	0	1 3/16	2 3/4	Rp3/4	1 9/16	3/4	1.6890	0.689
1 5/16	UCHB207-105D1										
1 3/8	UCHB207-106D1										
1 7/16	UCHB207-107D1										
40	UCHB208D1	96	121	2	33	73	Rp3/4	40	19	49.2	19
1 1/2	UCHB208-108D1	3 25/32	4 3/4	3/32	1 5/16	2 7/8	Rp3/4	1 9/16	3/4	1.9370	0.748
1 9/16	UCHB208-109D1										

Note (1) These numbers indicate relubricatable type. If maintenance free type is needed, please order without suffix "D1".
Remarks Please refer to page **A21** for size of grease fitting.

Nominal Designation of Thread N	Nominal dimensions mm: Major Diameter of Internal Thread	Pitch Diameter	Minor Diameter of Internal Thread	Tolerances	Mounting Bolt size
Rp3/4(PS3/4)	26.441	25.279	24.117	±0.142	R3/4(PT3/4)
Rp1(PS1)	33.249	31.770	30.291	±0.181	R1(PT1)
Rp1 1/4(PS1 1/4)	41.910	40.431	38.952	±0.181	R1 1/4(PT1 1/4)
Rp1 1/2(PS1 1/2)	47.803	46.324	44.845	±0.181	R1 1/2(PT1 1/2)

Bearing number	Housing number	Mass of unit kg / lb
UC201D1	HB204D1	1.0
UC201-008D1	HB204D1	2.2
UC202D1	HB204D1	0.9
UC202-009D1	HB204D1	2.0
UC202-010D1	HB204D1	
UC203D1	HB204D1	0.9
UC203-011D1	HB204D1	2.0
UC204D1	HB204D1	0.9
UC204-012D1	HB204D1	2.0
UC205D1	HB205D1	0.9
UC205-013D1	HB205D1	2.0
UC205-014D1	HB205D1	
UC205-015D1	HB205D1	
UC205-100D1	HB205D1	
UC206D1	HB206D1	0.8
UC206-101D1	HB206D1	1.8
UC206-102D1	HB206D1	
UC206-103D1	HB206D1	
UC206-104D1	HB206D1	
UC207D1	HB207D1	1.2
UC207-104D1	HB207D1	2.6
UC207-105D1	HB207D1	
UC207-106D1	HB207D1	
UC207-107D1	HB207D1	
UC208D1	HB208D1	1.3
UC208-108D1	HB208D1	2.9
UC208-109D1	HB208D1	

Hanger unit, cast housing
Set screw type

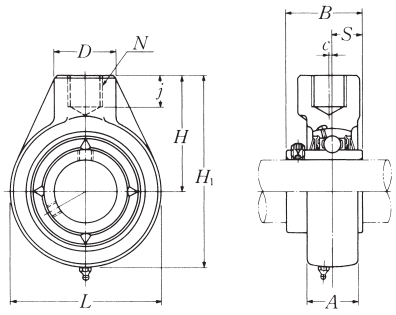

Shaft dia. mm / inch	Unit number (1)	Nominal dimensions mm inch L	H_1	c	A	H	N	D	j	B	S
45	UCHB209D1	108	136	5	35	82	Rp1	48	21	49.2	19
1 5/8	UCHB209-110D1										
1 11/16	UCHB209-111D1	4 1/4	5 11/32	3/16	1 3/8	3 15/64	Rp1	1 7/8	13/16	1.9370	0.748
1 3/4	UCHB209-112D1										
50	UCHB210D1	118	142	5	37	83	Rp1	48	21	51.6	19
1 13/16	UCHB210-113D1										
1 7/8	UCHB210-114D1	4 21/32	5 19/32	3/16	1 15/32	3 17/64	Rp1	1 7/8	13/16	2.0315	0.748
1 15/16	UCHB210-115D1										
2	UCHB210-200D1										
55	UCHB211D1	126	158	7	38	95	Rp1 1/4	60	25	55.6	22.2
2	UCHB211-200D1										
2 1/16	UCHB211-201D1	4 31/32	6 7/32	9/32	1 1/2	3 47/64	Rp1 1/4	2 3/8	31/32	2.1890	0.874
2 1/8	UCHB211-202D1										
2 3/16	UCHB211-203D1										
60	UCHB212D1	142	173	9	42	102	Rp1 1/4	60	28	65.1	25.4
2 1/4	UCHB212-204D1										
2 5/16	UCHB212-205D1	5 19/32	6 13/16	11/32	1 21/32	4 1/64	Rp1 1/4	2 3/8	1 3/32	2.5630	1.000
2 3/8	UCHB212-206D1										
2 7/16	UCHB212-207D1										
65	UCHB213D1	166	200	9.5	44	117	Rp1 1/2	70	32	65.1	25.4
2 1/2	UCHB213-208D1	6 17/32	7 7/8	3/8	1 23/32	4 39/64	Rp1 1/2	2 3/4	1 1/4	2.5630	1.000

Note (1) These numbers indicate relubricatable type. If maintenance free type is needed, please order without suffix "D1".
Remarks Please refer to page **A21** for size of grease fitting.

Nominal Designation of Thread N	Nominal dimensions mm: Major Diameter of Internal Thread	Pitch Diameter	Minor Diameter of Internal Thread	Tolerances	Mounting Bolt size
Rp3/4 (PS3/4)	26.441	25.279	24.117	±0.142	R3/4 (PT3/4)
Rp1 (PS1)	33.249	31.770	30.291	±0.181	R1 (PT1)
Rp1 1/4 (PS1 1/4)	41.910	40.431	38.952	±0.181	R1 1/4 (PT1 1/4)
Rp1 1/2 (PS1 1/2)	47.803	46.324	44.845	±0.181	R1 1/2 (PT1 1/2)

Bearing number	Housing number	Mass of unit kg / lb
UC209D1	HB209D1	1.8
UC209-110D1	HB209D1	
UC209-111D1	HB209D1	4.0
UC209-112D1	HB209D1	
UC210D1	HB210D1	2.2
UC210-113D1	HB210D1	
UC210-114D1	HB210D1	4.9
UC210-115D1	HB210D1	
UC210-200D1	HB210D1	
UC211D1	HB211D1	2.8
UC211-200D1	HB211D1	
UC211-201D1	HB211D1	6.2
UC211-202D1	HB211D1	
UC211-203D1	HB211D1	
UC212D1	HB212D1	3.7
UC212-204D1	HB212D1	
UC212-205D1	HB212D1	8.2
UC212-206D1	HB212D1	
UC212-207D1	HB212D1	
UC213D1	HB213D1	5.7
UC213-208D1	HB213D1	13

Take-up unit, cast housing
Set screw type

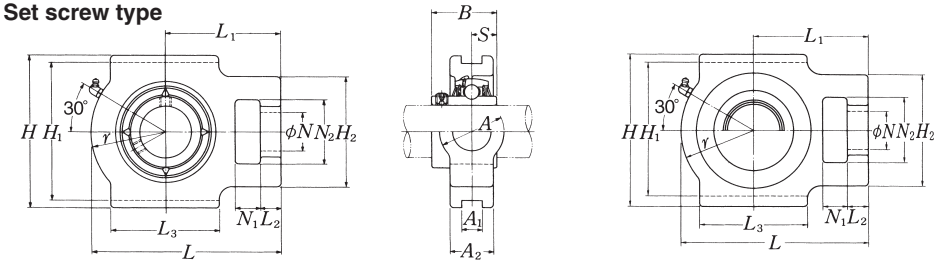

Pressed steel dust cover type
Open end **Z-UCT···D1**
Closed end **ZM-UCT···D1**

Shaft dia. mm / inch	Unit number (1)	Nominal dimensions mm / inch N_1	L_2	H_2	N_2	N	L_3	A_1	H_1	H	L	A_2	A	r	L_1	B	S
12	UCT201D1	16	12	51	32	19	51	12	76	89	94	21	32	33	61	31	12.7
1/2	UCT201-008D1	5/8	15/32	2	1 1/4	3/4	2	0.472	2 63/64	3 1/2	3 11/16	13/16	1 1/4	1 5/16	2 13/32	1.2205	0.500
15	UCT202D1	16	12	51	32	19	51	12	76	89	94	21	32	33	61	31	12.7
9/16	UCT202-009D1																
5/8	UCT202-010D1	5/8	15/32	2	1 1/4	3/4	2	0.472	2 63/64	3 1/2	3 11/16	13/16	1 1/4	1 5/16	2 13/32	1.2205	0.500
17	UCT203D1	16	12	51	32	19	51	12	76	89	94	21	32	33	61	31	12.7
11/16	UCT203-011D1	5/8	15/32	2	1 1/4	3/4	2	0.472	2 63/64	3 1/2	3 11/16	13/16	1 1/4	1 5/16	2 13/32	1.2205	0.500
20	UCT204D1	16	12	51	32	19	51	12	76	89	94	21	32	33	61	31	12.7
3/4	UCT204-012D1	5/8	15/32	2	1 1/4	3/4	2	0.472	2 63/64	3 1/2	3 11/16	13/16	1 1/4	1 5/16	2 13/32	1.2205	0.500
25	UCT205D1	16	12	51	32	19	51	12	76	89	97	24	32	35	62	34.1	14.3
13/16	UCT205-013D1																
7/8	UCT205-014D1																
15/16	UCT205-015D1	5/8	15/32	2	1 1/4	3/4	2	0.472	2 63/64	3 1/2	3 13/16	15/16	1 1/4	1 3/8	2 7/16	1.3425	0.563
1	UCT205-100D1																
30	UCT206D1	16	12	56	37	22	57	12	89	102	113	28	37	43	70	38.1	15.9
1 1/16	UCT206-101D1																
1 1/8	UCT206-102D1																
1 3/16	UCT206-103D1	5/8	15/32	2 7/32	1 15/32	7/8	2 1/4	0.472	3 1/2	4 1/32	4 7/16	1 3/32	1 15/32	1 11/16	2 3/4	1.5000	0.626
1 1/4	UCT206-104D1																
35	UCT207D1	16	15	64	37	22	64	12	89	102	129	30	37	51	78	42.9	17.5
1 1/4	UCT207-104D1																
1 5/16	UCT207-105D1																
1 3/8	UCT207-106D1	5/8	19/32	2 17/32	1 15/32	7/8	2 17/32	0.472	3 1/2	4 1/32	5 3/32	1 3/16	1 15/32	2	3 1/16	1.6890	0.689
1 7/16	UCT207-107D1																
40	UCT208D1	19	18	83	49	29	83	16	102	114	144	33	49	56	88	49.2	19
1 1/2	UCT208-108D1																
1 9/16	UCT208-109D1	3/4	23/32	3 9/32	1 15/16	1 5/32	3 9/32	0.630	4 1/64	4 1/2	5 21/32	1 5/16	1 15/16	2 7/32	3 15/32	1.9370	0.748

Note (1) These numbers indicate relubricatable type. If maintenance free type is needed, please order without suffix "D1".
Remarks Please refer to page **A21** for size of grease fitting.

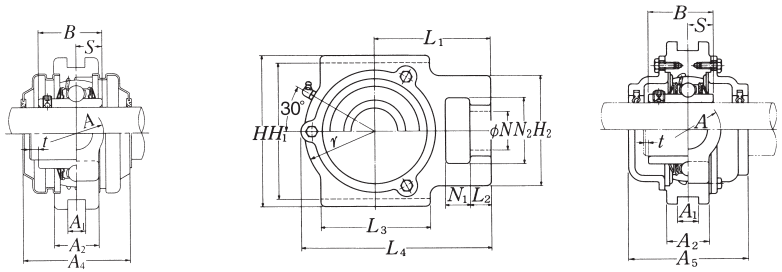

Cast dust cover type
Open end **C-UCT···D1**
Closed end **CM-UCT···D1**

Bearing number	Housing number	Unit number (1) pressed steel dust cover type	Unit number (1) cast dust cover type	Nominal dimensions mm / inch t max.	A_4	L_4	A_5	Mass of unit kg / lb UCT	Z(ZM)	C(CM)
UC201D1	T204D1	Z(ZM)-UCT201D1	C(CM)-UCT201D1	2	45	97	62	0.6	0.8	1.1
UC201-008D1	T204D1	Z(ZM)-UCT201-008D1	C(CM)-UCT201-008D1	5/64	1 25/32	3 13/16	2 7/16	1.3	1.8	2.4
UC202D1	T204D1	Z(ZM)-UCT202D1	C(CM)-UCT202D1	2	45	97	62	0.6	0.8	1.1
UC202-009D1	T204D1	Z(ZM)-UCT202-009D1	C(CM)-UCT202-009D1							
UC202-010D1	T204D1	Z(ZM)-UCT202-010D1	C(CM)-UCT202-010D1	5/64	1 25/32	3 13/16	2 7/16	1.3	1.8	2.4
UC203D1	T204D1	Z(ZM)-UCT203D1	C(CM)-UCT203D1	2	45	97	62	0.6	0.8	1.0
UC203-011D1	T204D1	Z(ZM)-UCT203-011D1	C(CM)-UCT203-011D1	5/64	1 35/32	3 13/16	2 7/16	1.3	1.8	2.2
UC204D1	T204D1	Z(ZM)-UCT204D1	C(CM)-UCT204D1	2	45	97	62	0.6	0.8	1.0
UC204-012D1	T204D1	Z(ZM)-UCT204-012D1	C(CM)-UCT204-012D1	5/64	1 25/32	3 13/16	2 7/16	1.3	1.8	2.2
UC205D1	T205D1	Z(ZM)-UCT205D1	C(CM)-UCT205D1	2	48	100.5	70	0.8	0.9	1.1
UC205-013D1	T205D1	Z(ZM)-UCT205-013D1	C(CM)-UCT205-013D1							
UC205-014D1	T205D1	Z(ZM)-UCT205-014D1	C(CM)-UCT205-014D1							
UC205-015D1	T205D1	Z(ZM)-UCT205-015D1	C(CM)-UCT205-015D1	5/64	1 29/32	3 31/32	2 3/4	1.8	2.0	2.4
UC205-100D1	T205D1	Z(ZM)-UCT205-100D1	C(CM)-UCT205-100D1							
UC206D1	T206D1	Z(ZM)-UCT206D1	C(CM)-UCT206D1	2	53	113.5	75	1.3	1.3	1.7
UC206-101D1	T206D1	Z(ZM)-UCT206-101D1	C(CM)-UCT206-101D1							
UC206-102D1	T206D1	Z(ZM)-UCT206-102D1	C(CM)-UCT206-102D1							
UC206-103D1	T206D1	Z(ZM)-UCT206-103D1	C(CM)-UCT206-103D1	5/64	2 3/32	4 15/32	2 15/16	2.9	2.9	3.7
UC206-104D1	T206D1	—	C(CM)-UCT206-104D1							
UC207D1	T207D1	Z(ZM)-UCT207D1	C(CM)-UCT207D1	3	60	129	80	1.6	1.7	2.1
UC207-104D1	T207D1	Z(ZM)-UCT207-104D1	C(CM)-UCT207-104D1							
UC207-105D1	T207D1	Z(ZM)-UCT207-105D1	C(CM)-UCT207-105D1							
UC207-106D1	T207D1	Z(ZM)-UCT207-106D1	C(CM)-UCT207-106D1	1/8	2 11/32	5 3/32	3 5/32	3.5	3.7	4.6
UC207-107D1	T207D1	—	C(CM)-UCT207-107D1							
UC208D1	T208D1	Z(ZM)-UCT208D1	C(CM)-UCT208D1	3	69	144	90	2.4	2.5	3.1
UC208-108D1	T208D1	Z(ZM)-UCT208-108D1	C(CM)-UCT208-108D1	1/8	2 23/32	5 21/32	3 17/32	5.3	5.5	6.8
UC208-109D1	T208D1	Z(ZM)-UCT208-109D1	C(CM)-UCT208-109D1							

Take-up unit, cast housing
Set screw type

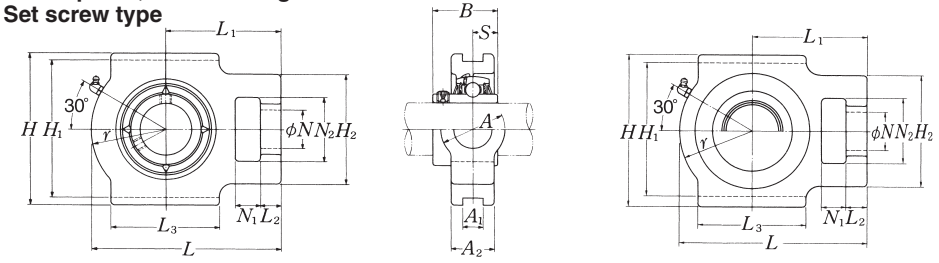

Pressed steel dust cover type
Open end **Z-UCT···D1**
Closed end **ZM-UCT···D1**

Shaft dia. mm / inch	Unit number (1)	Nominal dimensions mm / inch N_1	L_2	H_2	N_2	N	L_3	A_1	H_1	H	L	A_2	A	r	L_1	B	S
45	UCT209D1	19	18	83	49	29	83	16	102	117	145	35	49	57	88	49.2	19
1 5/8	UCT209-110D1																
1 11/16	UCT209-111D1	3/4	23/32	3 9/32	1 15/16	1 5/32	3 9/32	0.630	4 1/64	4 19/32	5 23/32	1 3/8	1 15/16	2 1/4	3 15/32	1.9370	0.748
1 3/4	UCT209-112D1																
50	UCT210D1	19	18	83	49	29	86	16	102	117	151	37	49	59	92	51.6	19
1 13/16	UCT210-113D1																
1 7/8	UCT210-114D1	3/4	23/32	3 9/32	1 15/16	1 5/32	3 3/8	0.630	4 1/64	4 19/32	5 15/16	1 15/32	1 15/16	2 5/16	3 5/8	2.0315	0.748
1 15/16	UCT210-115D1																
2	UCT210-200D1																
55	UCT211D1	25	21	102	64	35	95	22	130	146	171	38	64	65	106	55.6	22.2
2	UCT211-200D1																
2 1/16	UCT211-201D1	31/32	13/16	4 1/32	2 17/32	1 3/8	3 3/4	0.866	5 1/8	5 3/4	6 23/32	1 1/2	2 17/32	2 9/16	4 3/16	2.1890	0.874
2 1/8	UCT211-202D1																
2 3/16	UCT211-203D1																
60	UCT212D1	32	21	102	64	35	102	22	130	146	194	42	64	75	119	65.1	25.4
2 1/4	UCT212-204D1																
2 5/16	UCT212-205D1	1 1/4	13/16	4 1/32	2 17/32	1 3/8	4 1/32	0.866	5 1/8	5 3/4	7 5/8	1 21/32	2 17/32	2 15/16	4 11/16	2.5630	1.000
2 3/8	UCT212-206D1																
2 7/16	UCT212-207D1																
65	UCT213D1	32	23	111	70	41	121	26	151	167	224	44	70	87	137	65.1	25.4
2 1/2	UCT213-208D1	1 1/4	29/32	4 3/8	2 3/4	1 5/8	4 3/4	1.024	5 15/16	6 9/16	8 13/16	1 23/32	2 3/4	3 7/16	5 13/32	2.5630	1.000
2 9/16	UCT213-209D1																
70	UCT214D1	32	23	111	70	41	121	26	151	167	224	46	70	87	137	74.6	30.2
2 5/8	UCT214-210D1																
2 11/16	UCT214-211D1	1 1/4	29/32	4 3/8	2 3/4	1 5/8	4 3/4	1.024	5 15/16	6 9/16	8 13/16	1 13/16	2 3/4	3 7/16	5 13/32	2.9370	1.189
2 3/4	UCT214-212D1																

Note (1) These numbers indicate relubricatable type. If maintenance free type is needed, please order without suffix "D1".
Remarks Please refer to page **A21** for size of grease fitting.

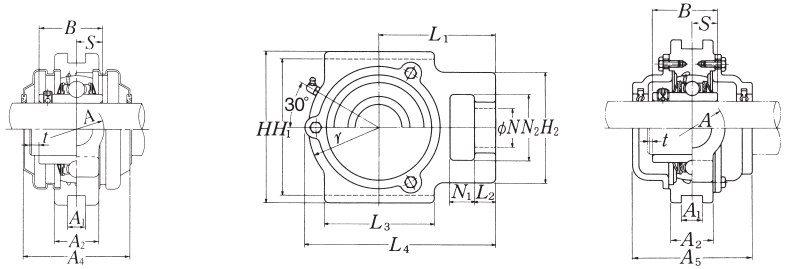

Cast dust cover type
Open end **C-UCT···D1**
Closed end **CM-UCT···D1**

Bearing number	Housing number	Unit number (1) pressed steel dust cover type	Unit number (1) cast dust cover type	Nominal dimensions mm / inch t max.	A_4	L_4	A_5	Mass of unit kg / lb UCT	Z(ZM)	C(CM)
UC209D1	T209D1	Z(ZM)-UCT209D1	C(CM)-UCT209D1	3	69	145.5	95	2.4	2.5	3.3
UC209-110D1	T209D1	Z(ZM)-UCT209-110D1	C(CM)-UCT209-110D1							
UC209-111D1	T209D1	Z(ZM)-UCT209-111D1	C(CM)-UCT209-111D1	1/8	2 23/32	5 23/32	3 3/4	5.3	5.5	7.3
UC209-112D1	T209D1	Z(ZM)-UCT209-112D1	C(CM)-UCT209-112D1							
UC210D1	T210D1	Z(ZM)-UCT210D1	C(CM)-UCT210D1	3	76	152	100	2.6	2.7	3.6
UC210-113D1	T210D1	Z(ZM)-UCT210-113D1	C(CM)-UCT210-113D1							
UC210-114D1	T210D1	Z(ZM)-UCT210-114D1	C(CM)-UCT210-114D1	1/8	3	5 31/32	3 15/16	5.7	6.0	7.9
UC210-115D1	T210D1	Z(ZM)-UCT210-115D1	C(CM)-UCT210-115D1							
UC210-200D1	T210D1	–	C(CM)-UCT210-200D1							
UC211D1	T211D1	Z(ZM)-UCT211D1	C(CM)-UCT211D1	4	77	171.5	100	3.9	4.1	5.0
UC211-200D1	T211D1	Z(ZM)-UCT211-200D1	C(CM)-UCT211-200D1							
UC211-201D1	T211D1	Z(ZM)-UCT211-201D1	C(CM)-UCT211-201D1	5/32	3 1/32	6 3/4	3 15/16	8.6	9.0	11
UC211-202D1	T211D1	Z(ZM)-UCT211-202D1	C(CM)-UCT211-202D1							
UC211-203D1	T211D1	Z(ZM)-UCT211-203D1	C(CM)-UCT211-203D1							
UC212D1	T212D1	Z(ZM)-UCT212D1	C(CM)-UCT212D1	4	89	194	115	4.8	5.1	6.1
UC212-204D1	T212D1	Z(ZM)-UCT212-204D1	C(CM)-UCT212-204D1							
UC212-205D1	T212D1	Z(ZM)-UCT212-205D1	C(CM)-UCT212-205D1	5/32	3 1/2	7 5/8	4 17/32	11	11	13
UC212-206D1	T212D1	Z(ZM)-UCT212-206D1	C(CM)-UCT212-206D1							
UC212-207D1	T212D1	–	C(CM)-UCT212-207D1							
UC213D1	T213D1	Z(ZM)-UCT213D1	C(CM)-UCT213D1	4	91	224	120	7.0	7.3	8.4
UC213-208D1	T213D1	Z(ZM)-UCT213-208D1	C(CM)-UCT213-208D1	5/32	3 19/32	8 13/16	4 23/32	15	16	19
UC213-209D1	T213D1	Z(ZM)-UCT213-209D1	C(CM)-UCT213-209D1							
UC214D1	T214D1	–	C(CM)-UCT214D1	4	–	224	135	7.0	–	9.1
UC214-210D1	T214D1		C(CM)-UCT214-201D1							
UC214-211D1	T214D1	–	C(CM)-UCT214-211D1	5/32	–	8 13/16	5 5/16	15	–	20
UC214-212D1	T214D1		C(CM)-UCT214-212D1							

Take-up unit, cast housing
Set screw type

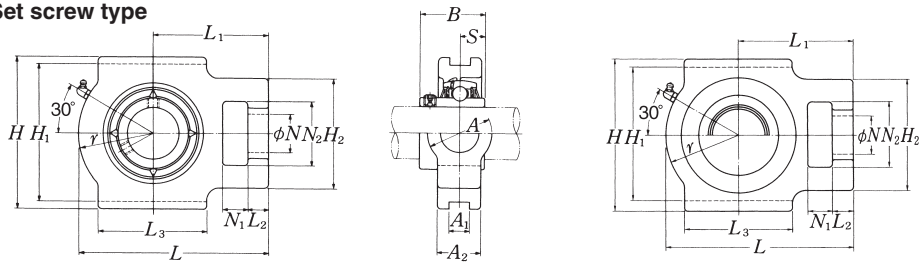

Pressed steel dust cover type
Open end **Z-UCT···D1**
Closed end **ZM-UCT···D1**

Shaft dia. mm inch	Unit number (1)	Nominal dimensions mm inch N_1	L_2	H_2	N_2	N	L_3	A_1	H_1	H	L	A_2	A	r	L_1	B	S
75	UCT215D1	32	23	111	70	41	121	26	151	167	232	48	70	92	140	77.8	33.3
2 13/16	UCT215-213D1																
2 7/8	UCT215-214D1	1 1/4	29/32	4 3/8	2 3/4	1 5/8	4 3/4	1.024	5 15/16	6 9/16	9 1/8	1 7/8	2 3/4	3 5/8	5 1/2	3.0630	1.311
2 15/16	UCT215-215D1																
3	UCT215-300D1																
80	UCT216D1	32	23	111	70	41	121	26	165	184	235	51	70	95	140	82.6	33.3
3 1/16	UCT216-301D1																
3 1/8	UCT216-302D1	1 1/4	29/32	4 3/8	2 3/4	1 5/8	4 3/4	1.024	6 1/2	7 1/4	9 1/4	2	2 3/4	3 3/4	5 1/2	3.2520	1.311
3 3/16	UCT216-303D1																
85	UCT217D1	38	31	124	73	48	157	30	173	198	260	54	73	98	162	85.7	34.1
3 1/4	UCT217-304D1																
3 5/16	UCT217-305D1	1 1/2	1 7/32	4 7/8	2 7/8	1 7/8	6 3/16	1.181	6 13/16	7 25/32	10 1/4	2 1/8	2 7/8	3 27/32	6 3/8	3.3740	1.343
3 7/16	UCT217-307D1																

Note (1) These numbers indicate relubricatable type. If maintenance free type is needed, please order without suffix "D1".
Remarks Please refer to page **A21** for size of grease fitting.

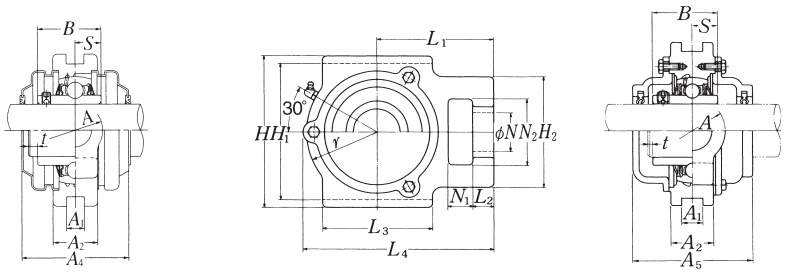

Cast dust cover type
Open end **C-UCT···D1**
Closed end **CM-UCT···D1**

Bearing number	Housing number	Unit nunber (1) pressed steel dust cover type	Unit number (1) cast dust cover type	Nominal dimensions mm inch t max.	A_4	L_4	A_5	Mass of unit kg lb UCT	Z(ZM)	C(CM)
UC215D1	T215D1	–	C(CM)-UCT215D1	4	–	232	135	7.4	–	9.8
UC215-213D1	T215D1		C(CM)-UCT215-213D1							
UC215-214D1	T215D1	–	C(CM)-UCT215-214D1	5/32	–	9 1/8	5 5/16	16	–	22
UC215-215D1	T215D1		C(CM)-UCT215-215D1							
UC215-300D1	T215D1		C(CM)-UCT215-300D1							
UC216D1	T216D1	–	C(CM)-UCT216D1	4	–	235	145	8.2	–	11
UC216-301D1	T216D1		C(CM)-UCT216-301D1							
UC216-302D1	T216D1	–	C(CM)-UCT216-302D1	5/32	–	9 1/4	5 23/32	18	–	24
UC216-303D1	T216D1		C(CM)-UCT216-303D1							
UC217D1	T217D1	–	C(CM)-UCT217D1	5	–	260	155	11	–	14
UC217-304D1	T217D1		C(CM)-UCT217-304D1							
UC217-305D1	T217D1	–	C(CM)-UCT217-305D1	13/64	–	10 1/4	6 3/32	24	–	31
UC217-307D1	T217D1		C(CM)-UCT217-307D1							

Take-up unit, cast housing
Set screw type

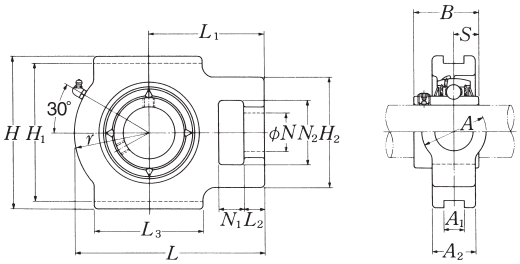

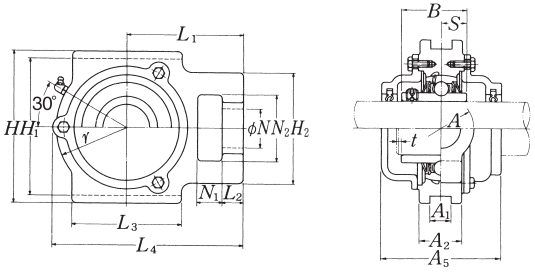

Shaft dia. mm / inch	Unit number (1)	Nominal dimensions mm / inch N_1	L_2	H_2	N_2	N	L_3	A_1	H_1	H	L	A_2	A	r	L_1	B	S
25	UCT305D1	16	14	62	36	26	65	12	80	89	122	26	36	46	76	38	15
13/16	UCT305-013D1																
7/8	UCT305-014D1	5/8	9/16	2 7/16	1 13/32	1 1/32	2 9/16	0.472	3 5/32	3 1/2	4 13/16	1 1/32	1 13/32	1 13/16	3	1.4961	0.591
15/16	UCT305-015D1																
1	UCT305-100D1																
30	UCT306D1	18	16	70	41	28	74	16	90	100	137	28	41	52	85	43	17
1 1/16	UCT306-101D1																
1 1/8	UCT306-102D1	23/32	5/8	2 3/4	1 5/8	1 3/32	2 29/32	0.630	3 35/64	3 15/16	5 13/32	1 3/32	1 5/8	2 1/16	3 11/32	1.6929	0.669
1 3/16	UCT306-103D1																
35	UCT307D1	20	17	75	45	30	80	16	100	111	150	32	45	56	94	48	19
1 1/4	UCT307-104D1																
1 5/16	UCT307-105D1	25/32	21/32	2 15/16	1 25/32	1 3/16	3 5/32	0.630	3 15/16	4 3/8	5 29/32	1 1/4	1 25/32	2 7/32	3 11/16	1.8898	0.748
1 3/8	UCT307-106D1																
1 7/16	UCT307-107D1																
40	UCT308D1	22	19	83	50	32	89	18	112	124	162	34	50	62	100	52	19
1 1/2	UCT308-108D1	7/8	3/4	3 9/32	1 31/32	1 1/4	3 1/2	0.709	4 13/32	4 7/8	6 3/8	1 11/32	1 31/32	2 7/16	3 15/16	2.0472	0.748
1 9/16	UCT308-109D1																
45	UCT309D1	24	20	90	55	34	97	18	125	138	178	38	55	68	110	57	22
1 5/8	UCT309-110D1																
1 11/16	UCT309-111D1	15/16	25/32	3 17/32	2 5/32	1 11/32	3 13/16	0.709	4 59/64	5 7/16	7	1 1/2	2 5/32	2 11/16	4 11/32	2.2441	0.866
1 3/4	UCT309-112D1																
50	UCT310D1	27	22	98	61	37	106	20	140	151	192	40	61	74	118	61	22
1 13/16	UCT310-113D1																
1 7/8	UCT310-114D1	1 1/16	7/8	3 27/32	2 13/32	1 15/32	4 3/16	0.787	5 33/64	5 15/16	7 9/16	1 9/16	2 13/32	2 29/32	4 21/32	2.4016	0.866
1 15/16	UCT310-115D1																

Note (1) These numbers indicate relubricatable type. If maintenance free type is needed, please order without suffix "D1".
Remarks Please refer to page **A21** for size of grease fitting.

Cast dust cover type
Open end **C-UCT···D1**
Closed end **CM-UCT···D1**

Bearing number	Housing number	Unit number (1) cast dust cover type	Nominal dimensions mm / inch t max.	L_4	A_5	Mass of unit kg / lb UCT	C(CM)
UC305D1	T305D1	C(CM)-UCT305D1	2	122	80	1.4	1.7
UC305-013D1	T305D1	C(CM)-UCT305-013D1					
UC305-014D1	T305D1	C(CM)-UCT305-014D1	5/64	4 13/16	3 5/32	3.1	3.7
UC305-015D1	T305D1	C(CM)-UCT305-015D1					
UC305-100D1	T305D1	C(CM)-UCT305-100D1					
UC306D1	T306D1	C(CM)-UCT306D1	2	139	85	1.8	2.4
UC306-101D1	T306D1	C(CM)-UCT306-101D1					
UC306-102D1	T306D1	C(CM)-UCT306-102D1	5/64	5 15/32	3 11/32	4.0	5.3
UC306-103D1	T306D1	C(CM)-UCT306-103D1					
UC307D1	T307D1	C(CM)-UCT307D1	3	152	95	2.3	3.2
UC307-104D1	T307D1	C(CM)-UCT307-104D1					
UC307-105D1	T307D1	C(CM)-UCT307-105D1					
UC307-106D1	T307D1	C(CM)-UCT307-106D1	1/8	5 31/32	3 3/4	5.1	7.1
UC307-107D1	T307D1	C(CM)-UCT307-107D1					
UC308D1	T308D1	C(CM)-UCT308D1	3	164	105	3.0	4.2
UC308-108D1	T308D1	C(CM)-UCT308-108D1	1/8	6 15/32	4 1/8	6.6	9.3
UC308-109D1	T308D1	C(CM)-UCT308-109D1					
UC309D1	T309D1	C(CM)-UCT309D1	3	181	110	4.0	5.4
UC309-110D1	T309D1	C(CM)-UCT309-110D1					
UC309-111D1	T309D1	C(CM)-UCT309-111D1	1/8	7 1/8	4 11/32	8.8	12
UC309-112D1	T309D1	C(CM)-UCT309-112D1					
UC310D1	T310D1	C(CM)-UCT310D1	3	197	120	5.0	7.0
UC310-113D1	T310D1	C(CM)-UCT310-113D1					
UC310-114D1	T310D1	C(CM)-UCT310-114D1	1/8	7 3/4	4 23/32	11	15
UC310-115D1	T310D1	C(CM)-UCT310-115D1					

Take-up unit, cast housing
Set screw type

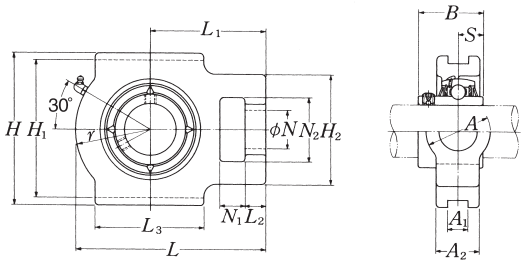

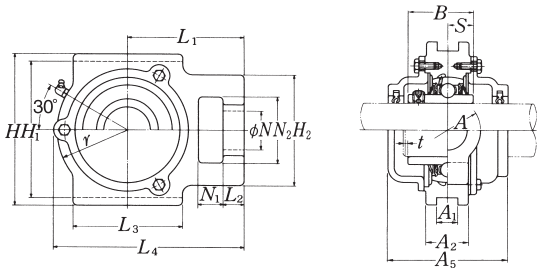

Cast dust cover type
Open end **C-UCT···D1**
Closed end **CM-UCT···D1**

Shaft dia. mm inch	Unit number (1)	Nominal dimensions mm inch N_1	L_2	H_2	N_2	N	L_3	A_1	H_1	H	L	A_2	A	r	L_1	B	S
55	UCT311D1	29	23	105	66	39	115	22	150	163	207	44	66	80	127	66	25
2	UCT311-200D1																
2 1/16	UCT311-201D1																
2 1/8	UCT311-202D1	1 5/32	29/32	4 1/8	2 19/32	1 17/32	4 17/32	0.866	5 29/32	6 13/32	8 5/32	1 23/32	2 19/32	3 5/32	5	2.5984	0.984
2 3/16	UCT311-203D1																
60	UCT312D1	31	25	113	71	41	123	22	160	178	220	46	71	85	135	71	26
2 1/4	UCT312-204D1																
2 5/16	UCT312-205D1																
2 3/8	UCT312-206D1	1 7/32	31/32	4 7/16	2 25/32	1 5/8	4 27/32	0.866	6 19/64	7	8 21/32	1 13/16	2 25/32	3 11/32	5 5/16	2.7953	1.024
2 7/16	UCT312-207D1																
65	UCT313D1	32	27	116	70	43	134	26	170	190	238	50	80	92	146	75	30
2 1/2	UCT313-208D1																
2 9/16	UCT313-209D1	1 1/4	1 1/16	4 9/16	2 3/4	1 11/16	5 9/32	1.024	6 11/16	7 15/32	9 3/8	1 31/32	3 5/32	3 5/8	5 3/4	2.9528	1.181
70	UCT314D1	36	27	130	85	46	140	26	180	202	252	52	90	97	155	78	33
2 5/8	UCT314-210D1																
2 11/16	UCT314-211D1	1 13/32	1 1/16	5 1/8	3 11/32	1 13/16	5 1/2	1.024	7 3/32	7 15/16	9 29/32	2 1/16	3 17/32	3 13/16	6 3/32	3.0709	1.299
2 3/4	UCT314-212D1																
75	UCT315D1	36	27	132	85	46	150	26	192	216	262	55	90	102	160	82	32
2 13/16	UCT315-213D1																
2 7/8	UCT315-214D1																
2 15/16	UCT315-215D1	1 13/32	1 1/16	5 3/16	3 11/32	1 13/16	5 29/32	1.024	7 9/16	8 1/2	10 5/16	2 5/32	3 17/32	4 1/32	6 5/16	3.2283	1.260
3	UCT315-300D1																
80	UCT316D1	42	30	150	98	53	160	30	204	230	282	60	102	108	174	86	34
3 1/16	UCT316-301D1																
3 1/8	UCT316-302D1	1 21/32	1 3/16	5 29/32	3 27/32	2 3/32	6 5/16	1.181	8 1/32	9 1/16	11 3/32	2 3/8	4 1/32	4 1/4	6 27/32	3.3858	1.339
3 3/16	UCT316-303D1																

Note (1) These numbers indicate relubricatable type. If maintenance free type is needed, please order without suffix "D1".
Remarks Please refer to page **A21** for size of grease fitting.

Bearing number	Housing number	Unit number (1) cast dust cover type	Nominal dimensions mm inch t max.	L_4	A_5	Mass of unit kg lb UCT	C(CM)
UC311D1	T311D1	C(CM)-UCT311D1	4	211	125	6.3	8.4
UC311-200D1	T311D1	C(CM)-UCT311-200D1					
UC311-201D1	T311D1	C(CM)-UCT311-201D1					
UC311-202D1	T311D1	C(CM)-UCT311-202D1	5/32	8 5/16	4 29/32	14	19
UC311-203D1	T311D1	C(CM)-UCT311-203D1					
UC312D1	T312D1	C(CM)-UCT312D1	4	227	135	7.6	10
UC312-204D1	T312D1	C(CM)-UCT312-204D1					
UC312-205D1	T312D1	C(CM)-UCT312-205D1					
UC312-206D1	T312D1	C(CM)-UCT312-206D1	5/32	8 15/16	5 5/16	17	22
UC312-207D1	T312D1	C(CM)-UCT312-207D1					
UC313D1	T313D1	C(CM)-UCT313D1	4	244	140	9.4	12
UC313-208D1	T313D1	C(CM)-UCT313-208D1					
UC313-209D1	T313D1	C(CM)-UCT313-209D1	5/32	9 19/32	5 1/2	21	26
UC314D1	T314D1	C(CM)-UCT314D1	4	258	140	11	14
UC314-210D1	T314D1	C(CM)-UCT314-210D1					
UC314-211D1	T314D1	C(CM)-UCT314-211D1	5/32	10 5/32	5 1/2	24	31
UC314-212D1	T314D1	C(CM)-UCT314-212D1					
UC315D1	T315D1	C(CM)-UCT315D1	4	268	150	13	17
UC315-213D1	T315D1	C(CM)-UCT315-213D1					
UC315-214D1	T315D1	C(CM)-UCT315-214D1					
UC315-215D1	T315D1	C(CM)-UCT315-215D1	5/32	10 9/16	5 29/32	29	37
UC315-300D1	T315D1	C(CM)-UCT315-300D1					
UC316D1	T316D1	C(CM)-UCT316D1	4	287	155	16	20
UC316-301D1	T316D1	C(CM)-UCT316-301D1					
UC316-302D1	T316D1	C(CM)-UCT316-302D1	5/32	11 5/16	6 3/32	35	44
UC316-303D1	T316D1	C(CM)-UCT316-303D1					

Take-up unit, cast housing
Set screw type

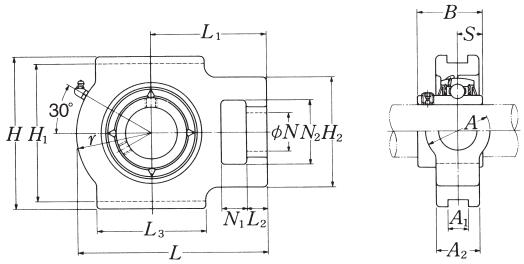

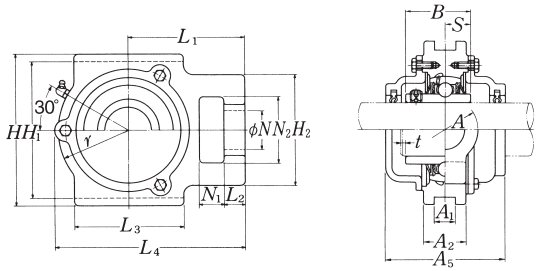

Cast dust cover type
Open end **C-UCT···D1**
Closed end **CM-UCT···D1**

Shaft dia. mm inch	Unit number (1)	Nominal dimensions mm inch N_1	L_2	H_2	N_2	N	L_3	A_1	H_1	H	L	A_2	A	r	L_1	B	S
85	UCT317D1	42	32	152	98	53	170	32	214	240	298	64	102	115	183	96	40
3 1/4	UCT317-304D1																
3 5/16	UCT317-305D1	1 21/32	1 1/4	5 31/32	3 27/32	2 3/32	6 11/16	1.260	8 27/64	9 7/16	11 23/32	2 17/32	4 1/32	4 17/32	7 7/32	3.7795	1.575
3 7/16	UCT317-307D1																
90	UCT318D1	46	32	160	106	57	175	32	228	255	312	66	110	120	192	96	40
3 7/16	UCT318-307D1	1 13/16	1 1/4	6 5/16	4 3/16	2 1/4	6 7/8	1.260	8 31/32	10 1/32	12 9/32	2 19/32	4 11/32	4 23/32	7 9/16	3.7795	1.575
3 1/2	UCT318-308D1																
95	UCT319D1	46	33	165	106	57	180	35	240	270	322	72	110	125	197	103	41
3 5/8	UCT319-310D1																
3 11/16	UCT319-311D1	1 13/16	1 5/16	6 1/2	4 3/16	2 1/4	7 3/32	1.378	9 29/64	10 5/8	12 11/16	2 27/32	4 11/32	4 29/32	7 3/4	4.0551	1.614
3 3/4	UCT319-312D1																
100	UCT320D1	48	34	175	115	59	200	35	260	290	345	75	120	135	210	108	42
3 13/16	UCT320-313D1																
3 7/8	UCT320-314D1	1 7/8	1 11/32	6 7/8	4 17/32	2 5/16	7 7/8	1.378	10 15/64	11 13/32	13 19/32	2 15/16	4 23/32	5 5/16	8 9/32	4.2520	1.654
3 15/16	UCT320-315D1																
4	UCT320-400D1																
105	UCT321D1	48	34	175	115	59	200	35	260	290	347	75	120	135	212	112	44
110	UCT322D1	52	40	185	125	65	215	38	285	320	385	80	130	150	235	117	46
120	UCT324D1	60	44	210	140	70	230	45	320	355	432	90	140	165	267	126	51
130	UCT326D1	65	47	220	150	75	240	50	350	385	465	100	150	180	285	135	54
140	UCT328D1	70	52	230	160	80	255	50	380	415	515	100	155	200	315	145	59

Note (1) These numbers indicate relubricatable type. If maintenance free type is needed, please order without suffix "D1".
Remarks Please refer to page **A21** for size of grease fitting.

Bearing number	Housing number	Unit number (1) cast dust cover type	Nominal dimensions mm inch t max.	L_4	A_5	Mass of unit kg lb UCT	C(CM)
UC317D1	T317D1	C(CM)-UCT317D1	5	303	170	19	25
UC317-304D1	T317D1	C(CM)-UCT317-304D1					
UC317-305D1	T317D1	C(CM)-UCT317-305D1	13/64	11 15/16	6 11/16	42	55
UC317-307D1	T317D1	C(CM)-UCT317-307D1					
UC318D1	T318D1	C(CM)-UCT318D1	5	317	170	21	27
UC318-307D1	T318D1	C(CM)-UCT318-307D1	13/64	12 15/32	6 11/16	46	60
UC318-308D1	T318D1	C(CM)-UCT318-308D1					
UC319D1	T319D1	C(CM)-UCT319D1	5	327	180	24	31
UC319-310D1	T319D1	C(CM)-UCT319-310D1					
UC319-311D1	T319D1	C(CM)-UCT319-311D1	13/64	12 7/8	7 3/32	53	68
UC319-312D1	T319D1	C(CM)-UCT319-312D1					
UC320D1	T320D1	C(CM)-UCT320D1	5	350	190	30	38
UC320-313D1	T320D1	C(CM)-UCT320-313D1					
UC320-314D1	T320D1	C(CM)-UCT320-314D1	13/64	13 25/32	7 15/32	66	84
UC320-315D1	T320D1	C(CM)-UCT320-315D1					
UC320-400D1	T320D1	C(CM)-UCT320-400D1					
UC321D1	T321D1	C(CM)-UCT321D1	5	359	195	32	43
UC322D1	T322D1	C(CM)-UCT322D1	5	395	200	40	55
UC324D1	T324D1	C(CM)-UCT324D1	5	439	215	55	71
UC326D1	T326D1	C(CM)-UCT326D1	6	476	225	69	92
UC328D1	T328D1	C(CM)-UCT328D1	6	519	235	84	111

Take-up unit, cast housing
Set screw type

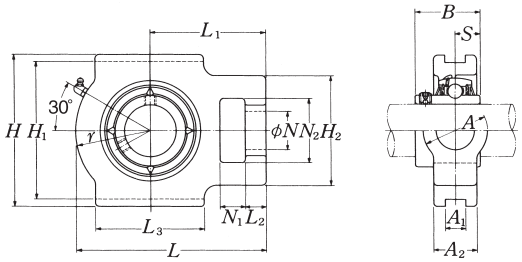

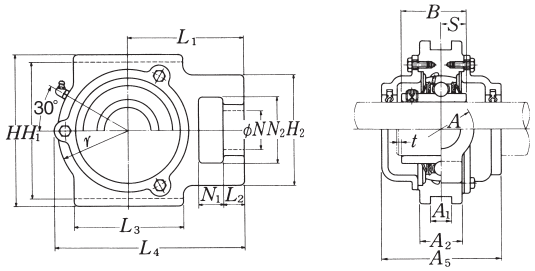

Cast dust cover type
Open end **C-UCT···D1**
Closed end **CM-UCT···D1**

Shaft dia. mm inch	Unit number (1)	Nominal dimensions mm inch N_1	L_2	H_2	N_2	N	L_3	A_1	H_1	H	L	A_2	A	r	L_1	B	S
25	UCTX05D1	16	12	56	37	22	57	12	89	102	113	28	37	43	70	38.1	15.9
13/16	UCTX05-013D1																
7/8	UCTX05-014D1	5/8	15/32	2 7/32	1 15/32	7/8	2 1/4	0.472	3 1/2	4 1/32	4 7/16	1 3/32	1 15/32	1 11/16	2 3/4	1.5000	0.626
15/16	UCTX05-015D1																
1	UCTX05-100D1																
30	UCTX06D1	16	15	64	37	22	64	12	89	102	129	30	37	51	78	42.9	17.5
1 1/16	UCTX06-101D1																
1 1/8	UCTX06-102D1	5/8	19/32	2 17/32	1 15/32	7/8	2 17/32	0.472	3 1/2	4 1/32	5 3/32	1 3/16	1 15/32	2	3 1/16	1.6890	0.689
1 3/16	UCTX06-103D1																
1 1/4	UCTX06-104D1																
35	UCTX07D1	19	17	83	49	29	83	16	102	114	144	36	49	56	88	49.2	19
1 5/16	UCTX07-105D1																
1 3/8	UCTX07-106D1	3/4	21/32	3 9/32	1 15/16	1 5/32	3 9/32	0.630	4 1/64	4 1/2	5 21/32	1 13/32	1 15/16	2 7/32	3 15/32	1.9370	0.748
1 7/16	UCTX07-107D1																
40	UCTX08D1	19	17	83	49	29	83	16	102	117	144	36	49	57	87	49.2	19
1 1/2	UCTX08-108D1	3/4	21/32	3 9/32	1 15/16	1 5/32	3 9/32	0.630	4 1/64	4 19/32	5 21/32	1 13/32	1 15/16	2 1/4	3 7/16	1.9370	0.748
1 9/16	UCTX08-109D1																
45	UCTX09D1	19	18	83	49	29	86	16	102	117	151	38	49	59	92	51.6	19
1 5/8	UCTX09-110D1																
1 11/16	UCTX09-111D1	3/4	23/32	3 9/32	1 15/16	1 5/32	3 3/8	0.630	4 1/64	4 19/32	5 15/16	1 1/2	1 15/16	2 5/16	3 5/8	2.0315	0.748
1 3/4	UCTX09-112D1																
1 13/16	UCTX09-113D1																
50	UCTX10D1	25	21	102	64	35	95	22	130	146	171	42	64	65	106	55.6	22.2
1 7/8	UCTX10-114D1																
1 15/16	UCTX10-115D1	31/32	13/16	4 1/32	2 17/32	1 3/8	3 3/4	0.866	5 1/8	5 3/4	6 23/32	1 21/32	2 17/32	2 9/16	4 3/16	2.1890	0.874
2	UCTX10-200D1																

Note (1) These numbers indicate relubricatable type. If maintenance free type is needed, please order without suffix "D1".
Remarks Please refer to page **A21** for size of grease fitting.

Bearing number	Housing number	Unit number (1) cast dust cover type	Nominal dimensions mm inch t max.	L_4	A_5	Mass of unit kg lb UCT	C(CM)
UCX05D1	TX05D1	C(CM)-UCTX05D1	2	113.5	75	1.4	1.8
UCX05-013D1	TX05D1	C(CM)-UCTX05-013D1					
UCX05-014D1	TX05D1	C(CM)-UCTX05-014D1	5/64	4 15/32	2 15/16	3.1	4.0
UCX05-015D1	TX05D1	C(CM)-UCTX05-015D1					
UCX05-100D1	TX05D1	C(CM)-UCTX05-100D1					
UCX06D1	TX06D1	C(CM)-UCTX06D1	2	129	80	1.8	2.3
UCX06-101D1	TX06D1	C(CM)-UCTX06-101D1					
UCX06-102D1	TX06D1	C(CM)-UCTX06-102D1	5/64	5 3/32	3 5/32	4.0	5.1
UCX06-103D1	TX06D1	C(CM)-UCTX06-103D1					
UC207-104D1	TX06D1	C(CM)-UCTX06-104D1					
UCX07D1	TX07D1	C(CM)-UCTX07D1	3	144	90	2.6	3.5
UCX07-105D1	TX07D1	C(CM)-UCTX07-105D1					
UCX07-106D1	TX07D1	C(CM)-UCTX07-106D1	1/8	5 21/32	3 17/32	5.7	7.7
UCX07-107D1	TX07D1	C(CM)-UCTX07-107D1					
UCX08D1	TX08D1	C(CM)-UCTX08D1	3	144.5	95	2.6	3.5
UCX08-108D1	TX08D1	C(CM)-UCTX08-108D1	1/8	5 11/16	3 3/4	5.7	7.7
UCX08-109D1	TX08D1	C(CM)-UCTX08-109D1					
UCX09D1	TX09D1	C(CM)-UCTX09D1	3	152	100	2.7	3.7
UCX09-110D1	TX09D1	C(CM)-UCTX09-110D1					
UCX09-111D1	TX09D1	C(CM)-UCTX09-111D1	1/8	5 31/32	3 15/16	6.0	8.2
UCX09-112D1	TX09D1	C(CM)-UCTX09-112D1					
UC210-113D1	TX09D1	C(CM)-UCTX09-113D1					
UCX10D1	TX10D1	C(CM)-UCTX10D1	3	171.5	100	4.2	5.4
UCX10-114D1	TX10D1	C(CM)-UCTX10-114D1					
UCX10-115D1	TX10D1	C(CM)-UCTX10-115D1	1/8	6 3/4	3 15/16	9.3	12
UC211-200D1	TX10D1	C(CM)-UCTX10-200D1					

Take-up unit, cast housing
Set screw type

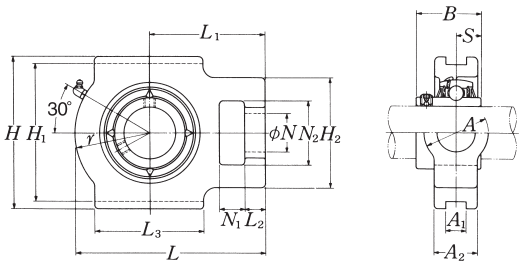

Shaft dia. mm / inch	Unit number (1)	Nominal dimensions mm / inch N_1	L_2	H_2	N_2	N	L_3	A_1	H_1	H	L	A_2	A	r	L_1	B	S
55	UCTX11D1	32	21	102	64	35	102	22	130	146	194	44	64	75	119	65.1	25.4
2 1/16	UCTX11-201D1																
2 1/8	UCTX11-202D1																
2 3/16	UCTX11-203D1	1 1/4	13/16	4 1/32	2 17/32	1 3/8	4 1/32	0.866	5 1/8	5 3/4	7 5/8	1 23/32	2 17/32	2 15/16	4 11/16	2.5630	1.000
2 1/4	UCTX11-204D1																
2 5/16	UCTX11-205D1																
60	UCTX12D1	32	23	111	70	41	121	26	151	167	224	48	70	87	137	65.1	25.4
2 3/8	UCTX12-206D1	1 1/4	29/32	4 3/8	2 3/4	1 5/8	4 3/4	1.024	5 15/16	6 9/16	8 13/16	1 7/8	2 3/4	3 7/16	5 13/32	2.5630	1.000
2 7/16	UCTX12-207D1																
65	UCTX13D1	32	23	111	70	41	121	26	151	167	224	48	70	87	137	74.6	30.2
2 1/2	UCTX13-208D1	1 1/4	29/32	4 3/8	2 3/4	1 5/8	4 3/4	1.024	5 15/16	6 9/16	8 13/16	1 7/8	2 3/4	3 7/16	5 13/32	2.9370	1.189
2 9/16	UCTX13-209D1																
70	UCTX14D1	32	23	111	70	41	121	26	151	167	232	48	70	92	140	77.8	33.3
2 5/8	UCTX14-210D1																
2 11/16	UCTX14-211D1	1 1/4	29/32	4 3/8	2 3/4	1 5/8	4 3/4	1.024	5 15/16	6 9/16	9 1/8	1 7/8	2 3/4	3 5/8	5 1/2	3.0630	1.311
2 3/4	UCTX14-212D1																
75	UCTX15D1	32	23	111	70	41	121	28	165	184	235	48	70	95	140	82.6	33.3
2 13/16	UCTX15-213D1																
2 7/8	UCTX15-214D1	1 1/4	29/32	4 3/8	2 3/4	1 5/8	4 3/4	1.102	6 1/2	7 1/4	9 1/4	1 7/8	2 3/4	3 3/4	5 1/2	3.2520	1.311
2 15/16	UCTX15-215D1																
3	UCTX15-300D1																
80	UCTX16D1	38	30	124	73	48	157	28	173	198	260	54	73	98	162	85.7	34.1
3 1/16	UCTX16-301D1																
3 1/8	UCTX16-302D1	1 1/2	1 3/16	4 7/8	2 7/8	1 7/8	6 3/16	1.102	6 13/16	7 25/32	10 1/4	2 1/8	2 7/8	3 27/32	6 3/8	3.3740	1.343
3 3/16	UCTX16-303D1																
3 1/4	UCTX16-304D1																
85	UCTX17D1	38	30	124	73	48	157	28	173	198	260	54	73	98	162	96	39.7
3 5/16	UCTX17-305D1	1 1/2	1 3/16	4 7/8	2 7/8	1 7/8	6 3/16	1.102	6 13/16	7 25/32	10 1/4	2 1/8	2 7/8	3 27/32	6 3/8	3.7795	1.563
3 7/16	UCTX17-307D1																

Note (1) These numbers indicate relubricatable type. If maintenance free type is needed, please order without suffix "D1".
Remarks Please refer to page **A21** for size of grease fitting.

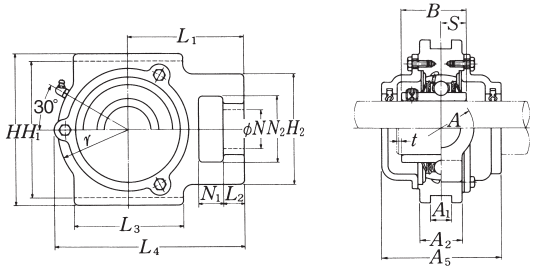

Cast dust cover type
Open end **C-UCT···D1**
Closed end **CM-UCT···D1**

Bearing number	Housing number	Unit number (1) cast dust cover type	Nominal dimensions mm / inch t max.	L_4	A_5	Mass of unit kg / lb UCT	C(CM)
UCX11D1	TX11D1	C(CM)-UCTX11D1	4	194	115	5.2	6.7
UCX11-201D1	TX11D1	C(CM)-UCTX11-201D1					
UCX11-202D1	TX11D1	C(CM)-UCTX11-202D1					
UCX11-203D1	TX11D1	C(CM)-UCTX11-203D1	5/32	7 5/8	4 17/32	11	15
UC212-204D1	TX11D1	C(CM)-UCTX11-204D1					
UC212-205D1	TX11D1	C(CM)-UCTX11-205D1					
UCX12D1	TX12D1	C(CM)-UCTX12D1	4	224	120	7.2	9.0
UCX12-206D1	TX12D1	C(CM)-UCTX12-206D1	5/32	8 13/16	4 23/32	16	20
UCX12-207D1	TX12D1	C(CM)-UCTX12-207D1					
UCX13D1	TX13D1	C(CM)-UCTX13D1	4	224	135	7.5	9.8
UCX13-208D1	TX13D1	C(CM)-UCTX13-208D1	5/32	8 13/16	5 5/16	17	22
UCX13-209D1	TX13D1	C(CM)-UCTX13-209D1					
UCX14D1	TX14D1	C(CM)-UCTX14D1	4	232	135	7.7	10
UCX14-210D1	TX14D1	C(CM)-UCTX14-210D1					
UCX14-211D1	TX14D1	C(CM)-UCTX14-211D1	5/32	9 1/8	5 5/16	17	22
UCX14-212D1	TX14D1	C(CM)-UCTX14-212D1					
UCX15D1	TX15D1	C(CM)-UCTX15D1	4	235	145	8.3	11
UCX15-213D1	TX15D1	C(CM)-UCTX15-213D1					
UCX15-214D1	TX15D1	C(CM)-UCTX15-214D1	5/32	9 1/4	5 23/32	18	24
UCX15-215D1	TX15D1	C(CM)-UCTX15-215D1					
UCX15-300D1	TX15D1	C(CM)-UCTX15-300D1					
UCX16D1	TX16D1	C(CM)-UCTX16D1	4	260	155	11	14
UCX16-301D1	TX16D1	C(CM)-UCTX16-301D1					
UCX16-302D1	TX16D1	C(CM)-UCTX16-302D1	5/32	10 1/4	6 3/32	24	31
UCX16-303D1	TX16D1	C(CM)-UCTX16-303D1					
UC217-304D1	TX16D1	C(CM)-UCTX16-304D1					
UCX17D1	TX17D1	C(CM)-UCTX17D1	5	262	165	11	15
UCX17-305D1	TX17D1	C(CM)-UCTX17-305D1	13/64	10 5/16	6 1/2	24	33
UCX17-307D1	TX17D1	C(CM)-UCTX17-307D1					

Take-up stretcher units™
Set screw type

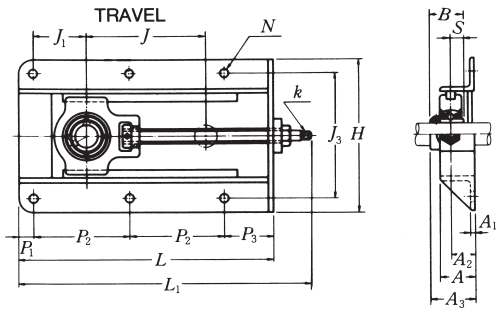

Shaft dia. mm	Unit number (1)	Nominal dimensions mm L	H	J	J_1	J_3	A_1	A_2	A	P_1	P_2	P_3	N	L_1	A_3	B	S	k square
12	UCT201-15	317	199	150	69	154	6	30	50	19	117	64	12	370	48.3	31	12.7	9
15	UCT202-15	317	199	150	69	154	6	30	50	19	117	64	12	370	48.3	31	12.7	9
17	UCT203-15	317	199	150	69	154	6	30	50	19	117	64	12	370	48.3	31	12.7	9
20	UCT204-15	317	199	150	69	154	6	30	50	19	117	64	12	370	48.3	31	12.7	9
25	UCT205-15	317	199	150	68	154	6	30	50	19	117	64	12	370	49.8	34.1	14.3	9
30	UCT206-15	337	212	150	73	166	6	32	50	19	127	64	12	393	54.2	38.1	15.9	10
35	UCT207-23	429	212	230	80	166	6	32	50	19	173	64	12	485	57.4	42.9	17.5	10
40	UCT208-30	520	233	300	88	192	6	32	50	22	217	64	12	596	62.2	49.2	19	15
45	UCT209-30	520	233	300	88	192	6	32	50	22	217	64	12	596	62.2	49.2	19	15
50	UCT210-30	524	233	300	92	192	6	35	50	22	219	64	15	599	67.6	51.6	19	15
55	UCT211-30	542	285	300	93	240	8	38	65	22	230	60	15	630	71.4	55.6	22.2	17
60	UCT212-30	568	285	300	103	240	8	38	65	22	243	60	15	657	77.7	65.1	25.4	17
65	UCT213-30	606	306	300	125	260	8	43	65	22	260	64	15	705	82.7	65.1	25.4	23

Notes (1) If relubricatable type is needed, please order with suffix "D1".
(2) The Stretcher Units is designed to only take a horizontal radial load, in line with the adjustment direction.
Axial loads or vertical radial loads can deform or break the housing.

Adjustment screw size	Bolt size	Max. load (2) recommended N	Bearing number	Mass of unit kg
TM16 × 3	M10	7 650	UC201D1	5.0
TM16 × 3	M10	7 650	UC202D1	5.0
TM16 × 3	M10	7 650	UC203D1	5.0
TM16 × 3	M10	7 650	UC204D1	5.0
TM16 × 3	M10	7 850	UC205D1	5.0
TM18 × 4	M10	9 810	UC206D1	5.7
TM18 × 4	M10	12 750	UC207D1	6.8
TM25 × 5	M10	15 690	UC208D1	11
TM25 × 5	M10	15 690	UC209D1	11
TM25 × 5	M12	16 670	UC210D1	11
TM30 × 6	M12	19 610	UC211D1	18
TM30 × 6	M12	21 570	UC212D1	20
TM30 × 6	M12	23 530	UC213D1	23

Take-up type L stretcher units™
Set screw type

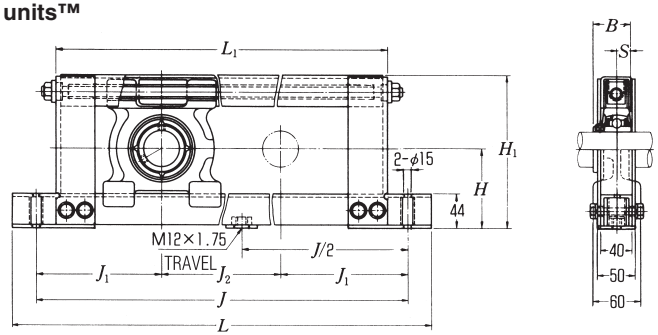

Shaft dia. mm	Unit number (1)	Nominal dimensions mm H	L	J	J_2	L_1	J_1	H_1	B	S	Bolt size	Max. load (2) recommended N
20	UCL204-10	77	430	370	100	320	135	146	31	12.7	M12	1 960
	UCL204-20	77	530	470	200	420	135	146	31	12.7	M12	1 960
	UCL204-30	77	630	570	300	520	135	146	31	12.7	M12	1 960
	UCL204-40	77	730	670	400	620	135	146	31	12.7	M12	1 960
25	UCL205-10	82	440	380	100	330	140	156	34.1	14.3	M12	2 250
	UCL205-20	82	540	480	200	430	140	156	34.1	14.3	M12	2 250
	UCL205-30	82	640	580	300	530	140	156	34.1	14.3	M12	2 250
	UCL205-40	82	740	680	400	630	140	156	34.1	14.3	M12	2 250
30	UCL206-10	87	450	390	100	340	145	166	38.1	15.9	M12	3 230
	UCL206-20	87	550	490	200	440	145	166	38.1	15.9	M12	3 230
	UCL206-30	87	650	590	300	540	145	166	38.1	15.9	M12	3 230
	UCL206-40	87	750	690	400	640	145	166	38.1	15.9	M12	3 230
35	UCL207-10	92	460	400	100	350	150	176	42.9	17.5	M12	4 210
	UCL207-20	92	560	500	200	450	150	176	42.9	17.5	M12	4 210
	UCL207-30	92	660	600	300	550	150	176	42.9	17.5	M12	4 210
	UCL207-40	92	760	700	400	650	150	176	42.9	17.5	M12	4 210
40	UCL208-10	97	470	410	100	360	155	186	49.2	19	M12	4 500
	UCL208-20	97	570	510	200	460	155	186	49.2	19	M12	4 500
	UCL208-30	97	670	610	300	560	155	186	49.2	19	M12	4 500
	UCL208-40	97	770	710	400	660	155	186	49.2	19	M12	4 500
45	UCL209-10	100	480	420	100	370	160	192	49.2	19	M12	4 500
	UCL209-20	100	580	520	200	470	160	192	49.2	19	M12	4 500
	UCL209-30	100	680	620	300	570	160	192	49.2	19	M12	4 500
	UCL209-40	100	780	420	400	670	160	192	49.2	19	M12	4 500

Bearing number	Mass of unit kg
UC204D1	6.3
UC204D1	7.0
UC204D1	7.7
UC204D1	8.4
UC205D1	6.8
UC205D1	7.5
UC205D1	8.2
UC205D1	8.9
UC206D1	7.3
UC206D1	8.0
UC206D1	8.7
UC206D1	9.4
UC207D1	7.8
UC207D1	8.5
UC207D1	9.2
UC207D1	9.9
UC208D1	8.3
UC208D1	9.0
UC208D1	9.7
UC208D1	10
UC209D1	8.7
UC209D1	9.4
UC209D1	10
UC209D1	11

Notes (1) If relubricatable type is needed, please order with suffix "D1".
(2) The Stretcher Units is designed to only take a horizontal radial load, in line with the adjustment direction. Axial loads or vertical radial loads can deform or break the housing.

Take-up type M stretcher units™
Set screw type

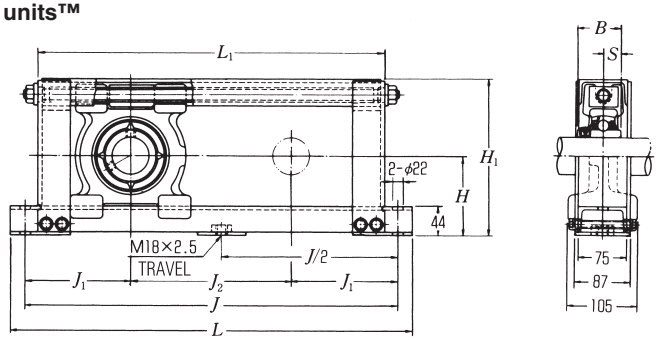

Shaft dia. mm	Unit number (1)	Nominal dimensions mm H	L	J	J_2	L_1	J_1	H_1	B	S	Bolt size	Max. load (2) recommended N	Bearing number	Mass of unit kg
40	UCM208-50	97	870	810	500	760	155	190	49.2	19	M18	5 190	UC208D1	20
	UCM208-60	97	970	910	600	860	155	190	49.2	19	M18	5 190	UC208D1	22
	UCM208-70	97	1070	1010	700	960	155	190	49.2	19	M18	5 190	UC208D1	23
	UCM208-80	97	1170	1110	800	1060	155	190	49.2	19	M18	5 190	UC208D1	24
	UCM208-90	97	1270	1210	900	1160	155	190	49.2	19	M18	5 190	UC208D1	30
45	UCM209-50	102	880	820	500	770	160	200	49.2	19	M18	5 880	UC209D1	21
	UCM209-60	102	980	920	600	870	160	200	49.2	19	M18	5 880	UC209D1	23
	UCM209-70	102	1080	1020	700	970	160	200	49.2	19	M18	5 880	UC209D1	24
	UCM209-80	102	1180	1120	800	1070	160	200	49.2	19	M18	5 880	UC209D1	30
	UCM209-90	102	1280	1220	900	1170	160	200	49.2	19	M18	5 880	UC209D1	32
50	UCM210-50	107	890	830	500	780	165	210	51.6	19	M18	6 460	UC210D1	23
	UCM210-60	107	990	930	600	880	165	210	51.6	19	M18	6 460	UC210D1	24
	UCM210-70	107	1090	1030	700	980	165	210	51.6	19	M18	6 460	UC210D1	30
	UCM210-80	107	1190	1130	800	1080	165	210	51.6	19	M18	6 460	UC210D1	32
	UCM210-90	107	1290	1230	900	1180	165	210	51.6	19	M18	6 460	UC210D1	33
55	UCM211-50	115	910	850	500	800	175	230	55.6	22.2	M18	6 460	UC211D1	25
	UCM211-60	115	1010	950	600	900	175	230	55.6	22.2	M18	6 460	UC211D1	27
	UCM211-70	115	1110	1050	700	1000	175	230	55.6	22.2	M18	6 460	UC211D1	32
	UCM211-80	115	1210	1150	800	1100	175	230	55.6	22.2	M18	6 460	UC211D1	34
	UCM211-90	115	1310	1250	900	1200	175	230	55.6	22.2	M18	6 460	UC211D1	36
60	UCM212-50	120	920	860	500	810	180	240	65.1	25.4	M18	6 460	UC212D1	28
	UCM212-60	120	1020	960	600	910	180	240	65.1	25.4	M18	6 460	UC212D1	29
	UCM212-70	120	1120	1060	700	1010	180	240	65.1	25.4	M18	6 460	UC212D1	35
	UCM212-80	120	1220	1160	800	1110	180	240	65.1	25.4	M18	6 460	UC212D1	36
	UCM212-90	120	1320	1260	900	1210	180	240	65.1	25.4	M18	6 460	UC212D1	38
65	UCM213-50	125	940	880	500	830	190	250	65.1	25.4	M18	6 460	UC213D1	30
	UCM213-60	125	1040	980	600	930	190	250	65.1	25.4	M18	6 460	UC213D1	31
	UCM213-70	125	1140	1080	700	1030	190	250	65.1	25.4	M18	6 460	UC213D1	36
	UCM213-80	125	1240	1180	800	1130	190	250	65.1	25.4	M18	6 460	UC213D1	38
	UCM213-90	125	1340	1280	900	1230	190	250	65.1	25.4	M18	6 460	UC213D1	40

Notes (1) If relubricatable type is needed, please order with suffix "D1".
(2) The Stretcher Units is designed to only take a horizontal radial load, in line with the adjustment direction.
Axial loads or vertical radial loads can deform or break the housing.

Take-up type M stretcher units™
Set screw type

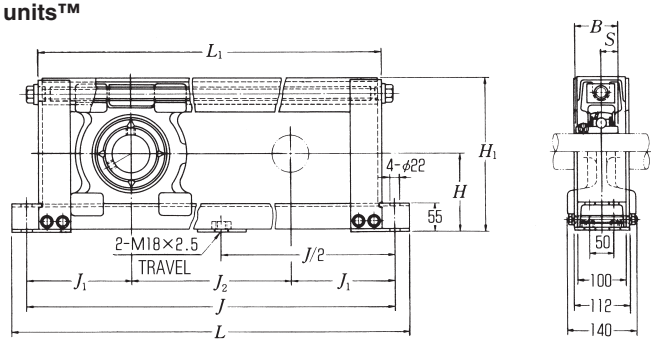

Shaft dia. mm	Unit number (1)	Nominal dimensions mm H	L	J	J_2	L_1	J_1	H_1	B	S	Bolt size	Max. load (2) recommended N	Bearing number	Mass of unit kg
65	UCM313-50	145	940	880	500	830	190	285	75	30	M18	16 260	UC313D1	47
	UCM313-60	145	1040	980	600	930	190	285	75	30	M18	16 260	UC313D1	50
	UCM313-70	145	1140	1080	700	1030	190	285	75	30	M18	16 260	UC313D1	53
	UCM313-80	145	1240	1180	800	1130	190	285	75	30	M18	16 260	UC313D1	55
	UCM313-90	145	1340	1280	900	1230	190	285	75	30	M18	16 260	UC313D1	58
70	UCM314-50	150	960	900	500	850	200	295	78	33	M18	19 600	UC314D1	49
	UCM314-60	150	1060	1000	600	950	200	295	78	33	M18	19 600	UC314D1	52
	UCM314-70	150	1160	1100	700	1050	200	295	78	33	M18	19 600	UC314D1	55
	UCM314-80	150	1260	1200	800	1150	200	295	78	33	M18	19 600	UC314D1	58
	UCM314-90	150	1360	1300	900	1250	200	295	78	33	M18	19 600	UC314D1	61
75	UCM315-50	155	980	920	500	870	210	305	82	32	M18	19 600	UC315D1	52
	UCM315-60	155	1080	1020	600	970	210	305	82	32	M18	19 600	UC315D1	55
	UCM315-70	155	1180	1120	700	1070	210	305	82	32	M18	19 600	UC315D1	58
	UCM315-80	155	1280	1220	800	1170	210	305	82	32	M18	19 600	UC315D1	60
	UCM315-90	155	1380	1320	900	1270	210	305	82	32	M18	19 600	UC315D1	63
80	UCM316-50	160	1000	940	500	890	220	315	86	34	M18	19 600	UC316D1	54
	UCM316-60	160	1100	1040	600	990	220	315	86	34	M18	19 600	UC316D1	57
	UCM316-70	160	1200	1140	700	1090	220	315	86	34	M18	19 600	UC316D1	60
	UCM316-80	160	1300	1240	800	1190	220	315	86	34	M18	19 600	UC316D1	63
	UCM316-90	160	1400	1340	900	1290	220	315	86	34	M18	19 600	UC316D1	66
85	UCM317-50	165	1020	960	500	910	230	325	96	40	M18	19 600	UC317D1	60
	UCM317-60	165	1120	1060	600	1010	230	325	96	40	M18	19 600	UC317D1	63
	UCM317-70	165	1220	1160	700	1110	230	325	96	40	M18	19 600	UC317D1	65
	UCM317-80	165	1320	1260	800	1210	230	325	96	40	M18	19 600	UC317D1	68
	UCM317-90	165	1420	1360	900	1310	230	325	96	40	M18	19 600	UC317D1	71

Notes (1) If relubricatable type is needed, please order with suffix "D1".
(2) The Stretcher Units is designed to only take a horizontal radial load, in line with the adjustment direction.
Axial loads or vertical radial loads can deform or break the housing.

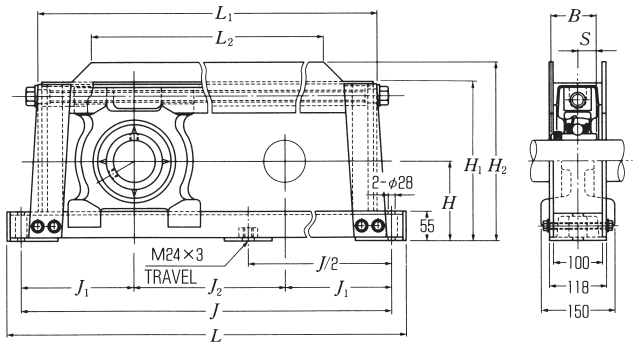

Shaft dia. mm	Unit number (1)	Nominal dimensions mm H	L	J	J_2	L_1	L_2	J_1	H_1	H_2	B	S	Bolt size	Max. load (2) recommended N	Bearing number	Mass of unit kg
90	UCM318-50	170	1050	990	500	940	—	245	335	—	96	40	M18	19 600	UC318D1	65
	UCM318-60	170	1150	1090	600	1040	—	245	335	—	96	40	M18	19 600	UC318D1	68
	UCM318-70	170	1250	1190	700	1140	—	245	335	—	96	40	M18	19 600	UC318D1	71
	UCM318-80	170	1350	1290	800	1240	—	245	335	—	96	40	M18	19 600	UC318D1	74
	UCM318-90	170	1450	1390	900	1340	—	245	335	—	96	40	M18	19 600	UC318D1	77
95	UCM319-50	185	1180	1100	500	1021	775	300	377	400	103	41	M24	19 600	UC319D1	105
	UCM319-60	185	1280	1200	600	1121	875	300	377	400	103	41	M24	19 600	UC319D1	109
	UCM319-70	185	1380	1300	700	1221	975	300	377	400	103	41	M24	19 600	UC319D1	112
	UCM319-80	185	1480	1400	800	1321	1075	300	377	400	103	41	M24	19 600	UC319D1	116
	UCM319-90	185	1580	1500	900	1421	1175	300	377	400	103	41	M24	19 600	UC319D1	120
100	UCM320-50	200	1220	1140	500	1063	809	320	403	430	108	42	M24	19 600	UC320D1	111
	UCM320-60	200	1320	1240	600	1163	909	320	403	430	108	42	M24	19 600	UC320D1	116
	UCM320-70	200	1420	1340	700	1263	1009	320	403	430	108	42	M24	19 600	UC320D1	120
	UCM320-80	200	1520	1440	800	1363	1109	320	403	430	108	42	M24	19 600	UC320D1	124
	UCM320-90	200	1620	1540	900	1463	1209	320	403	430	108	42	M24	19 600	UC320D1	129

Notes (1) If relubricatable type is needed, please order with suffix "D1".
(2) The Stretcher Units is designed to only take a horizontal radial load, in line with the adjustment direction.
Axial loads or vertical radial loads can deform or break the housing.

Take-up mini stretcher units™
Set screw type

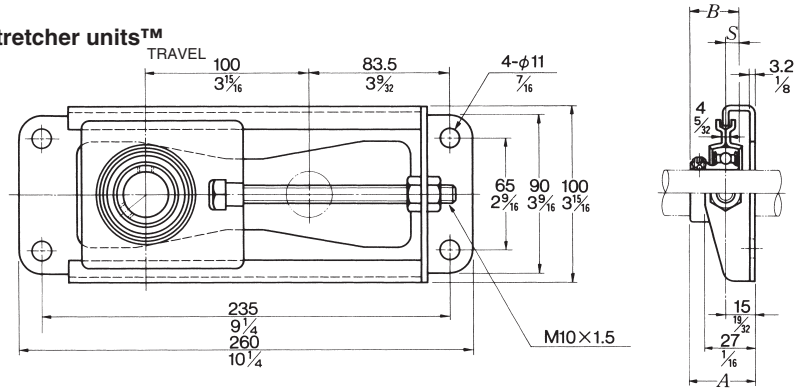

Shaft dia. mm / inch	Unit number	Nominal dimensions mm / inch A	B	S	Bolt size mm / inch	Max. load (1) recommended N / lbf	Bearing number	Mass of unit kg / lb
12 1/2	ASPT201-10 ASPT201-008-10	31 1 7/32	22 0.8661	6 0.236	M10 3/8	3 430 770	AS201 AS201-008	1.1 2.4
15 9/16 5/8	ASPT202-10 ASPT202-009-10 ASPT202-010-10	31 1 7/32	22 0.8661	6 0.236	M10 3/8	3 430 770	AS202 AS202-009 AS202-010	1.1 2.4
17 11/16	ASPT203-10 ASPT203-011-10	31 1 7/32	22 0.8661	6 0.236	M10 3/8	3 430 770	AS203 AS203-011	1.1 2.4
20 3/4	ASPT204-10 ASPT204-012-10	33 1 19/64	25 0.9843	7 0.276	M10 3/8	3 430 770	AS204 AS204-012	1.1 2.4
25 13/16 7/8 15/16 1	ASPT205-10 ASPT205-013-10 ASPT205-014-10 ASPT205-015-10 ASPT205-100-10	34.5 1 23/64	27 1.0630	7.5 0.295	M10 3/8	3 430 770	AS205 AS205-013 AS205-014 AS205-015 AS205-100	1.1 2.4

Note (1) The Stretcher Units is designed to only take a horizontal radial load, in line with the adjustment direction. Axial loads or vertical radial loads can deform or break the housing.

Cartridge unit, cast housing
Set screw type

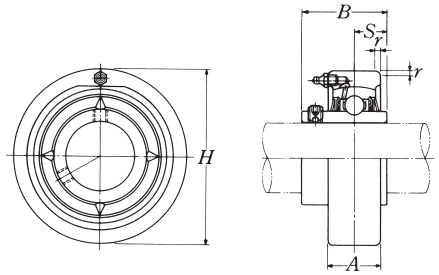

Shaft dia. mm / inch	Unit number (1)	Nominal dimensions mm / inch H	A	r	B	S	Bearing number	Housing number	Mass of unit kg / lb
12	UCC201D1	72	20	2	31	12.7	UC201D1	C204D1	0.5
1/2	UCC201-008D1	2.8346	25/32	0.079	1.2205	0.500	UC201-008D1	C204D1	1.1
15	UCC202D1	72	20	2	31	12.7	UC202D1	C204D1	0.5
9/16	UCC202-009D1	2.8346	25/32	0.079	1.2205	0.500	UC202-009D1	C204D1	1.1
5/8	UCC202-010D1						UC202-010D1	C204D1	
17	UCC203D1	72	20	2	31	12.7	UC203D1	C204D1	0.5
11/16	UCC203-011D1	2.8346	25/32	0.079	1.2205	0.500	UC203-011D1	C204D1	1.1
20	UCC204D1	72	20	2	31	12.7	UC204D1	C204D1	0.5
3/4	UCC204-012D1	2.8346	25/32	0.079	1.2205	0.500	UC204-012D1	C204D1	1.1
25	UCC205D1	80	22	2	34.1	14.3	UC205D1	C205D1	0.6
13/16	UCC205-013D1	3.1496	55/64	0.079	1.3425	0.563	UC205-013D1	C205D1	1.3
7/8	UCC205-014D1						UC205-014D1	C205D1	
15/16	UCC205-015D1						UC205-015D1	C205D1	
1	UCC205-100D1						UC205-100D1	C205D1	
30	UCC206D1	85	27	2	38.1	15.9	UC206D1	C206D1	0.8
1 1/16	UCC206-101D1	3.3465	1 1/16	0.079	1.5000	0.626	UC206-101D1	C206D1	1.8
1 1/8	UCC206-102D1						UC206-102D1	C206D1	
1 3/16	UCC206-103D1						UC206-103D1	C206D1	
1 1/4	UCC206-104D1						UC206-104D1	C206D1	
35	UCC207D1	90	28	2	42.9	17.5	UC207D1	C207D1	0.9
1 1/4	UCC207-104D1	3.5433	1 7/64	0.079	1.6890	0.689	UC207-104D1	C207D1	2.0
1 5/16	UCC207-105D1						UC207-105D1	C207D1	
1 3/8	UCC207-106D1						UC207-106D1	C207D1	
1 7/16	UCC207-107D1						UC207-107D1	C207D1	

Note (1) These numbers indicate relubricatable type. If maintenance free type is needed, please order without suffix "D1".
Remarks Please refer to page **A21** for size of grease fitting.

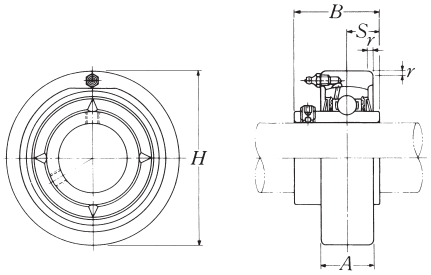

Shaft dia. mm / inch	Unit number (1)	Nominal dimensions mm / inch H	A	r	B	S	Bearing number	Housing number	Mass of unit kg / lb
40	UCC208D1	100	30	2.5	49.2	19	UC208D1	C208D1	1.2
1 1/2	UCC208-108D1	3.9370	1 3/16	0.098	1.9370	0.748	UC208-108D1	C208D1	2.6
1 9/16	UCC208-109D1						UC208-109D1	C208D1	
45	UCC209D1	110	31	2.5	49.2	19	UC209D1	C209D1	1.5
1 5/8	UCC209-110D1	4.3307	1 7/32	0.098	1.9370	0.748	UC209-110D1	C209D1	3.3
1 11/16	UCC209-111D1						UC209-111D1	C209D1	
1 3/4	UCC209-112D1						UC209-112D1	C209D1	
50	UCC210D1	120	33	2.5	51.6	19	UC210D1	C210D1	1.9
1 13/16	UCC210-113D1	4.7244	1 19/64	0.098	2.0315	0.748	UC210-113D1	C210D1	4.2
1 7/8	UCC210-114D1						UC210-114D1	C210D1	
1 15/16	UCC210-115D1						UC210-115D1	C210D1	
2	UCC210-200D1						UC210-200D1	C210D1	
55	UCC211D1	125	35	2.5	55.6	22.2	UC211D1	C211D1	2.1
2	UCC211-200D1	4.9213	1 3/8	0.098	2.1890	0.874	UC211-200D1	C211D1	4.6
2 1/16	UCC211-201D1						UC211-201D1	C211D1	
2 1/8	UCC211-202D1						UC211-202D1	C211D1	
2 3/16	UCC211-203D1						UC211-203D1	C211D1	
60	UCC212D1	130	38	2.5	65.1	25.4	UC212D1	C212D1	2.5
2 1/4	UCC212-204D1	5.1181	1 1/2	0.098	2.5630	1.000	UC212-204D1	C212D1	5.5
2 5/16	UCC212-205D1						UC212-205D1	C212D1	
2 3/8	UCC212-206D1						UC212-206D1	C212D1	
2 7/16	UCC212-207D1						UC212-207D1	C212D1	
65	UCC213D1	140	40	3	65.1	25.4	UC213D1	C213D1	3.0
2 1/2	UCC213-208D1	5.5118	1 37/64	0.118	2.5630	1.000	UC213-208D1	C213D1	6.6
2 9/16	UCC213-209D1						UC213-209D1	C213D1	

Note (1) These numbers indicate relubricatable type. If maintenance free type is needed, please order without suffix "D1".
Remarks Please refer to page **A21** for size of grease fitting.

Cartridge unit, cast housing
Set screw type

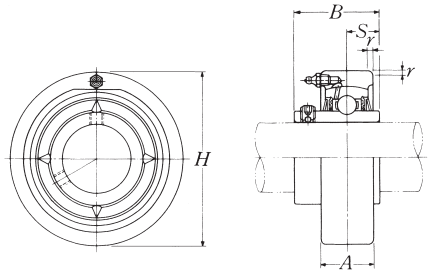

Shaft dia. mm / inch	Unit number (1)	Nominal dimensions mm / inch H	A	r	B	S	Bearing number	Housing number	Mass of unit kg / lb
25	UCC305D1	90	26	2.5	38	15	UC305D1	C305D1	1.0
13/16	UCC305-013D1						UC305-013D1	C305D1	
7/8	UCC305-014D1	3.5433	1 1/32	0.098	1.4961	0.591	UC305-014D1	C305D1	2.2
15/16	UCC305-015D1						UC305-015D1	C305D1	
1	UCC305-100D1						UC305-100D1	C305D1	
30	UCC306D1	100	28	2.5	43	17	UC306D1	C306D1	1.3
1 1/16	UCC306-101D1						UC306-101D1	C306D1	
1 1/8	UCC306-102D1	3.9370	1 7/64	0.098	1.6929	0.669	UC306-102D1	C306D1	2.9
1 3/16	UCC306-103D1						UC306-103D1	C306D1	
35	UCC307D1	110	32	3	48	19	UC307D1	C307D1	1.7
1 1/4	UCC307-104D1						UC307-104D1	C307D1	
1 5/16	UCC307-105D1	4.3307	1 17/64	0.118	1.8898	0.748	UC307-105D1	C307D1	3.7
1 3/8	UCC307-106D1						UC307-106D1	C307D1	
1 7/16	UCC307-107D1						UC307-107D1	C307D1	
40	UCC308D1	120	34	3	52	19	UC308D1	C308D1	2.1
1 1/2	UCC308-108D1	4.7244	1 11/32	0.118	2.0472	0.748	UC308-108D1	C308D1	4.6
1 9/16	UCC308-109D1						UC308-109D1	C308D1	
45	UCC309D1	130	38	3.5	57	22	UC309D1	C309D1	2.7
1 5/8	UCC309-110D1						UC309-110D1	C309D1	
1 11/16	UCC309-111D1	5.1181	1 1/2	0.138	2.2441	0.866	UC309-111D1	C309D1	6.0
1 3/4	UCC309-112D1						UC309-112D1	C309D1	
50	UCC310D1	140	40	3.5	61	22	UC310D1	C310D1	3.3
1 13/16	UCC310-113D1						UC310-113D1	C310D1	
1 7/8	UCC310-114D1	5.5118	1 37/64	0.138	2.4016	0.866	UC310-114D1	C310D1	7.3
1 15/16	UCC310-115D1						UC310-115D1	C310D1	

Note (1) These numbers indicate relubricatable type. If maintenance free type is needed, please order without suffix "D1".
Remarks Please refer to page **A21** for size of grease fitting.

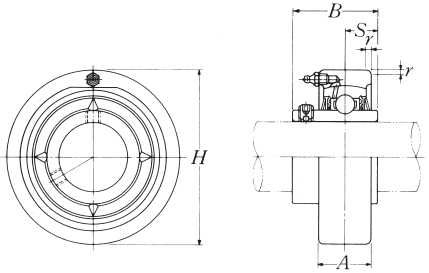

Shaft dia. mm / inch	Unit number (1)	Nominal dimensions mm / inch H	A	r	B	S	Bearing number	Housing number	Mass of unit kg / lb
55	UCC311D1	150	44	3.5	66	25	UC311D1	C311D1	4.0
2	UCC311-200D1						UC311-200D1	C311D1	
2 1/16	UCC311-201D1	5.9055	1 47/64	0.138	2.5984	0.984	UC311-201D1	C311D1	8.8
2 1/8	UCC311-202D1						UC311-202D1	C311D1	
2 3/16	UCC311-203D1						UC311-203D1	C311D1	
60	UCC312D1	160	46	3.5	71	26	UC312D1	C312D1	4.8
2 1/4	UCC312-204D1						UC312-204D1	C312D1	
2 5/16	UCC312-205D1	6.2992	1 13/16	0.138	2.7953	1.024	UC312-205D1	C312D1	11
2 3/8	UCC312-206D1						UC312-206D1	C312D1	
2 7/16	UCC312-207D1						UC312-207D1	C312D1	
65	UCC313D1	170	50	3.5	75	30	UC313D1	C313D1	5.8
2 1/2	UCC313-208D1	6.6929	1 31/32	0.138	2.9528	1.181	UC313-208D1	C313D1	13
2 9/16	UCC313-209D1						UC313-209D1	C313D1	
70	UCC314D1	180	52	4	78	33	UC314D1	C314D1	6.8
2 5/8	UCC314-210D1						UC314-210D1	C314D1	
2 11/16	UCC314-211D1	7.0866	2 3/64	0.157	3.0709	1.299	UC314-211D1	C314D1	15
2 3/4	UCC314-212D1						UC314-212D1	C314D1	
75	UCC315D1	190	55	4	82	32	UC315D1	C315D1	7.9
2 13/16	UCC315-213D1						UC315-213D1	C315D1	
2 7/8	UCC315-214D1	7.4803	2 11/64	0.157	3.2283	1.260	UC315-214D1	C315D1	17
2 15/16	UCC315-215D1						UC315-215D1	C315D1	
3	UCC315-300D1						UC315-300D1	C315D1	
80	UCC316D1	200	60	4	86	34	UC316D1	C316D1	9.3
3 1/16	UCC316-301D1						UC316-301D1	C316D1	
3 1/8	UCC316-302D1	7.8740	2 23/64	0.157	3.3858	1.339	UC316-302D1	C316D1	21
3 3/16	UCC316-303D1						UC316-303D1	C316D1	

Note (1) These numbers indicate relubricatable type. If maintenance free type is needed, please order without suffix "D1".
Remarks Please refer to page **A21** for size of grease fitting.

Cartridge unit, cast housing
Set screw type

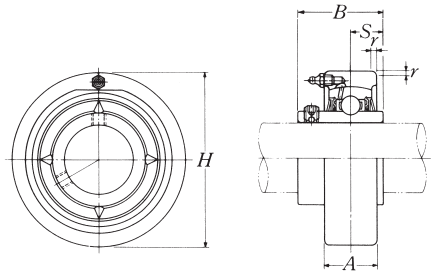

Shaft dia. mm / inch	Unit number (1)	Nominal dimensions mm / inch H	A	r	B	S	Bearing number	Housing number	Mass of unit kg / lb
85	UCC317D1	215	64	4	96	40	UC317D1	C317D1	11
3 1/4	UCC317-304D1						UC317-304D1	C317D1	
3 5/16	UCC317-305D1	8.4646	2 33/64	0.157	3.7795	1.575	UC317-305D1	C317D1	24
3 7/16	UCC317-307D1						UC317-307D1	C317D1	
90	UCC318D1	225	66	4	96	40	UC318D1	C318D1	13
3 1/2	UCC318-308D1	8.8583	2 19/32	0.157	3.7795	1.575	UC318-308D1	C318D1	29
95	UCC319D1	240	72	4	103	41	UC319D1	C319D1	16
3 5/8	UCC319-310D1						UC319-310D1	C319D1	
3 11/16	UCC319-311D1	9.4488	2 53/64	0.157	4.0551	1.614	UC319-311D1	C319D1	35
3 3/4	UCC319-312D1						UC319-312D1	C319D1	
100	UCC320D1	260	75	4	108	42	UC320D1	C320D1	20
3 13/16	UCC320-313D1						UC320-313D1	C320D1	
3 7/8	UCC320-314D1	10.2362	2 61/64	0.157	4.2520	1.654	UC320-314D1	C320D1	44
3 15/16	UCC320-315D1						UC320-315D1	C320D1	
4	UCC320-400D1						UC320-400D1	C320D1	
105	UCC321D1	260	75	4	112	44	UC321D1	C321D1	19
110	UCC322D1	300	80	5	117	46	UC322D1	C322D1	29
120	UCC324D1	320	90	5	126	51	UC324D1	C324D1	36
130	UCC326D1	340	100	5	135	54	UC326D1	C326D1	43
140	UCC328D1	360	100	5	145	59	UC328D1	C328D1	50

Note (1) These numbers indicate relubricatable type. If maintenance free type is needed, please order without suffix "D1".
Remarks Please refer to page **A21** for size of grease fitting.

Cartridge unit, cast housing
Set screw type

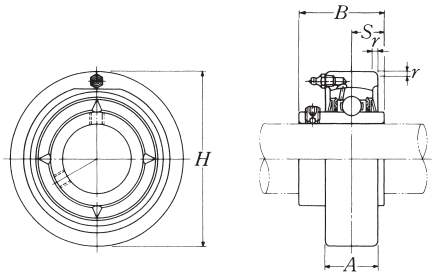

Shaft dia. mm / inch	Unit number (1)	Nominal dimensions mm inch H	A	r	B	S	Bearing number	Housing number	Mass of unit kg lb
25	**UCCX05D1**	90	27	2	38.1	15.9	UCX05D1	CX05D1	1.1
13/16	**UCCX05-013D1**						UCX05-013D1	CX05D1	
7/8	**UCCX05-014D1**	3.5433	1 1/16	0.079	1.5000	0.626	UCX05-014D1	CX05D1	2.4
15/16	**UCCX05-015D1**						UCX05-015D1	CX05D1	
1	**UCCX05-100D1**						UCX05-100D1	CX05D1	
30	**UCCX06D1**	100	30	2.5	42.9	17.5	UCX06D1	CX06D1	1.6
1 1/16	**UCCX06-101D1**						UCX06-101D1	CX06D1	
1 1/8	**UCCX06-102D1**	3.9370	1 3/16	0.098	1.6890	0.689	UCX06-102D1	CX06D1	3.5
1 3/16	**UCCX06-103D1**						UCX06-103D1	CX06D1	
1 1/4	**UCCX06-104D1**						UC207-104D1	CX06D1	
35	**UCCX07D1**	110	34	2.5	49.2	19	UCX07D1	CX07D1	1.8
1 5/16	**UCCX07-105D1**						UCX07-105D1	CX07D1	
1 3/8	**UCCX07-106D1**	4.3307	1 11/32	0.098	1.9370	0.748	UCX07-106D1	CX07D1	4.0
1 7/16	**UCCX07-107D1**						UCX07-107D1	CX07D1	
40	**UCCX08D1**	120	38	2.5	49.2	19	UCX08D1	CX08D1	2.5
1 1/2	**UCCX08-108D1**	4.7244	1 1/2	0.098	1.9370	0.748	UCX08-108D1	CX08D1	5.5
1 9/16	**UCCX08-109D1**						UCX08-109D1	CX08D1	
45	**UCCX09D1**	120	38	2.5	51.6	19	UCX09D1	CX09D1	2.2
1 5/8	**UCCX09-110D1**						UCX09-110D1	CX09D1	
1 11/16	**UCCX09-111D1**	4.7244	1 1/2	0.098	2.0315	0.748	UCX09-111D1	CX09D1	4.9
1 3/4	**UCCX09-112D1**						UCX09-112D1	CX09D1	
1 13/16	**UCCX09-113D1**						UC210-113D1	CX09D1	
50	**UCCX10D1**	130	40	2.5	55.6	22.2	UCX10D1	CX10D1	2.7
1 7/8	**UCCX10-114D1**						UCX10-114D1	CX10D1	
1 15/16	**UCCX10-115D1**	5.1181	1 37/64	0.098	2.1890	0.874	UCX10-115D1	CX10D1	6.0
2	**UCCX10-200D1**						UC211-200D1	CX10D1	

Note (1) These numbers indicate relubricatable type. If maintenance free type is needed, please order without suffix "D1".
Remarks Please refer to page **A21** for size of grease fitting.

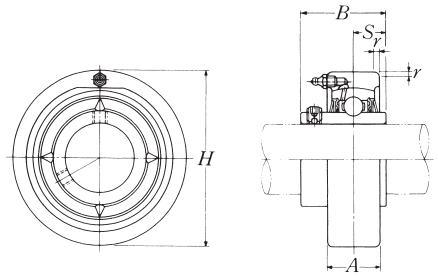

Shaft dia. mm / inch	Unit number (1)	Nominal dimensions mm inch H	A	r	B	S	Bearing number	Housing number	Mass of unit kg lb
55	**UCCX11D1**	150	42	3	65.1	25.4	UCX11D1	CX11D1	4.1
2 1/16	**UCCX11-201D1**						UCX11-201D1	CX11D1	
2 1/8	**UCCX11-202D1**						UCX11-202D1	CX11D1	
2 3/16	**UCCX11-203D1**	5.9055	1 21/32	0.118	2.5630	1.000	UCX11-203D1	CX11D1	9.0
2 1/4	**UCCX11-204D1**						UC212-204D1	CX11D1	
2 5/16	**UCCX11-205D1**						UC212-205D1	CX11D1	
60	**UCCX12D1**	160	44	3	65.1	25.4	UCX12D1	CX12D1	3.9
2 3/8	**UCCX12-206D1**	6.2992	1 47/64	0.118	2.5630	1.000	UCX12-206D1	CX12D1	8.6
2 7/16	**UCCX12-207D1**						UCX12-207D1	CX12D1	

Note (1) These numbers indicate relubricatable type. If maintenance free type is needed, please order without suffix "D1".
Remarks Please refer to page **A21** for size of grease fitting.

Pillow block unit, cast housing
Eccentric locking collar type

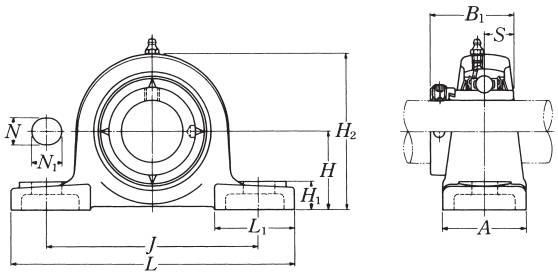

Shaft dia. mm / inch	Unit number (1)	Nominal dimensions mm / inch H	L	J	A	N	N_1	H_1	H_2	L_1	B_1	S	Bolt size mm / inch
20	UELP204D1W3	33.3	127	95	38	13	16	14	65	42	43.7	17.1	M10
3/4	UELP204-012D1W3	1 5/16	5	3 3/4	1 1/2	1/2	5/8	9/16	2 9/16	1 21/32	1.720	0.673	3/8
25	UELP205D1W3	36.5	140	105	38	13	16	15	71	42	44.4	17.45	M10
13/16	UELP205-013D1W3												
7/8	UELP205-014D1W3	1 7/16	5 1/2	4 1/8	1 1/2	1/2	5/8	19/32	2 25/32	1 21/32	1.748	0.687	3/8
15/16	UELP205-015D1W3												
1	UELP205-100D1W3												
30	UELP206D1W3	42.9	165	121	48	17	20	17	83	54	48.4	18.25	M14
1 1/16	UELP206-101D1W3												
1 1/8	UELP206-102D1W3	1 11/16	6 1/2	4 3/4	1 7/8	21/32	25/32	21/32	3 9/32	2 1/8	1.906	0.719	1/2
1 3/16	UELP206-103D1W3												
1 1/4	UELP206-104D1W3												
35	UELP207D1W3	47.6	167	127	48	17	20	18	93	54	51.1	18.8	M14
1 1/4	UELP207-104D1W3												
1 5/16	UELP207-105D1W3	1 7/8	6 9/16	5	1 7/8	21/32	25/32	23/32	3 21/32	2 1/8	2.012	0.740	1/2
1 3/8	UELP207-106D1W3												
1 7/16	UELP207-107D1W3												
40	UELP208D1W3	49.2	184	137	54	17	20	18	98	52	56.3	21.4	M14
1 1/2	UELP208-108D1W3	1 15/16	7 1/4	5 13/32	2 1/8	21/32	25/32	23/32	3 27/32	2 1/16	2.217	0.843	1/2
1 9/16	UELP208-109D1W3												
45	UELP209D1W3	54	190	146	54	17	20	20	106	60	56.3	21.4	M14
1 5/8	UELP209-110D1W3												
1 11/16	UELP209-111D1W3	2 1/8	7 15/32	5 3/4	2 1/8	21/32	25/32	25/32	4 3/16	2 3/8	2.217	0.843	1/2
1 3/4	UELP209-112D1W3												
50	UELP210D1W3	57.2	206	159	60	20	23	21	114	65	62.7	24.6	M16
1 13/16	UELP210-113D1W3												
1 7/8	UELP210-114D1W3	2 1/4	8 1/8	6 1/4	2 3/8	25/32	29/32	13/16	4 1/2	2 9/16	2.469	0.969	5/8
1 15/16	UELP210-115D1W3												
2	UELP210-200D1W3												

Bearing number	Housing number	Mass of unit kg / lb
UEL204D1W3	P204D1	0.8
UEL204-012D1W3	P204D1	1.8
UEL205D1W3	P205D1	0.9
UEL205-013D1W3	P205D1	
UEL205-014D1W3	P205D1	2.0
UEL205-015D1W3	P205D1	
UEL205-100D1W3	P205D1	
UEL206D1W3	P206D1	1.5
UEL206-101D1W3	P206D1	
UEL206-102D1W3	P206D1	3.3
UEL206-103D1W3	P206D1	
UEL206-104D1W3	P206D1	
UEL207D1W3	P207D1	1.8
UEL207-104D1W3	P207D1	
UEL207-105D1W3	P207D1	4.0
UEL207-106D1W3	P207D1	
UEL207-107D1W3	P207D1	
UEL208D1W3	P208D1	2.1
UEL208-108D1W3	P208D1	4.6
UEL208-109D1W3	P208D1	
UEL209D1W3	P209D1	2.3
UEL209-110D1W3	P209D1	
UEL209-111D1W3	P209D1	5.1
UEL209-112D1W3	P209D1	
UEL210D1W3	P210D1	2.9
UEL210-113D1W3	P210D1	
UEL210-114D1W3	P210D1	6.4
UEL210-115D1W3	P210D1	
UEL210-200D1W3	P210D1	

Note (1) These numbers indicate relubricatable type. If maintenance free type is needed, please order without suffix "D1".
Remarks Please refer to page **A21** for size of grease fitting.

Pillow block unit, cast housing
Eccentric locking collar type

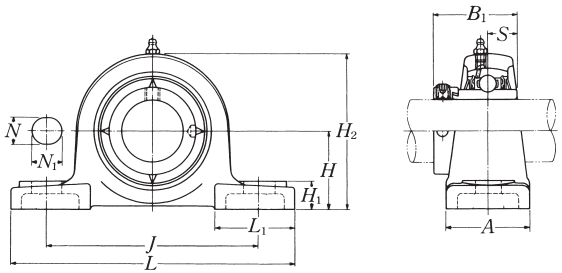

Shaft dia. mm / inch	Unit number (1)	Nominal dimensions mm / inch H	L	J	A	N	N_1	H_1	H_2	L_1	B_1	S	Bolt size mm / inch
55	**UELP211D1W3**	63.5	219	171	60	20	23	23	126	65	71.4	27.75	M16
2	**UELP211-200D1W3**												
2 1/16	**UELP211-201D1W3**	2 1/2	8 5/8	6 23/32	2 3/8	25/32	29/32	29/32	4 31/32	2 9/16	2.811	1.093	5/8
2 1/8	**UELP211-202D1W3**												
2 3/16	**UELP211-203D1W3**												
60	**UELP212D1W3**	69.8	241	184	70	20	23	25	138	70	77.8	30.95	M16
2 1/4	**UELP212-204D1W3**												
2 5/16	**UELP212-205D1W3**	2 3/4	9 1/2	7 1/4	2 3/4	25/32	29/32	31/32	5 7/16	2 3/4	3.063	1.219	5/8
2 3/8	**UELP212-206D1W3**												
2 7/16	**UELP212-207D1W3**												
65	**UELP213D1W3**	76.2	265	203	70	25	28	27	151	77	85.7	34.15	M20
2 1/2	**UELP213-208D1W3**	3	10 7/16	8	2 3/4	31/32	1 3/32	1 1/16	5 15/16	3 1/32	3.374	1.344	3/4
2 9/16	**UELP213-209D1W3**												
70	**UELP214D1W3**	79.4	266	210	72	25	28	27	157	77	85.7	34.15	M20
2 5/8	**UELP214-210D1W3**												
2 11/16	**UELP214-211D1W3**	3 1/8	10 15/32	8 9/32	2 27/32	31/32	1 3/32	1 1/16	6 3/16	3 1/32	3.374	1.344	3/4
2 3/4	**UELP214-212D1W3**												
75	**UELP215D1W3**	82.6	275	217	74	25	28	28	163	80	92	37.3	M20
2 13/16	**UELP215-213D1W3**												
2 7/8	**UELP215-214D1W3**	3 1/4	10 13/16	8 17/32	2 29/32	31/32	1 3/32	1 3/32	6 13/32	3 5/32	3.622	1.469	3/4
2 15/16	**UELP215-215D1W3**												
3	**UELP215-300D1W3**												

Note (1) These numbers indicate relubricatable type. If maintenance free type is needed, please order without suffix "D1".
Remarks Please refer to page **A21** for size of grease fitting.

Bearing number	Housing number	Mass of unit kg / lb
UEL211D1W3	P211D1	3.7
UEL211-200D1W3	P211D1	
UEL211-201D1W3	P211D1	8.2
UEL211-202D1W3	P211D1	
UEL211-203D1W3	P211D1	
UEL212D1W3	P212D1	5.0
UEL212-204D1W3	P212D1	
UEL212-205D1W3	P212D1	11
UEL212-206D1W3	P212D1	
UEL212-207D1W3	P212D1	
UEL213D1W3	P213D1	6.2
UEL213-208D1W3	P213D1	14
UEL213-209D1W3	P213D1	
UEL214D1W3	P214D1	6.9
UEL214-210D1W3	P214D1	
UEL214-211D1W3	P214D1	15
UEL214-212D1W3	P214D1	
UEL215D1W3	P215D1	7.6
UEL215-213D1W3	P215D1	
UEL215-214D1W3	P215D1	17
UEL215-215D1W3	P215D1	
UEL215-300D1W3	P215D1	

Pillow block unit, cast housing
Eccentric locking collar type

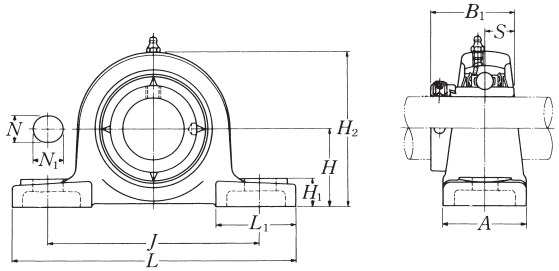

Shaft dia. mm inch	Unit number (1)	Nominal dimensions mm inch H	L	J	A	N	N_1	H_1	H_2	L_1	B_1	S	Bolt size mm inch
25	**UELP305D1W3**	45	175	132	45	17	20	15	85	54	46.8	16.7	M14
13/16	**UELP305-013D1W3**												
7/8	**UELP305-014D1W3**	1 49/64	6 7/8	5 3/16	1 25/32	21/32	25/32	19/32	3 11/32	2 1/8	1.843	0.657	1/2
15/16	**UELP305-015D1W3**												
1	**UELP305-100D1W3**												
30	**UELP306D1W3**	50	180	140	50	17	20	18	95	54	50	17.5	M14
1 1/16	**UELP306-101D1W3**												
1 1/8	**UELP306-102D1W3**	1 31/32	7 3/32	5 1/2	1 31/32	21/32	25/32	23/32	3 3/4	2 1/8	1.969	0.689	1/2
1 3/16	**UELP306-103D1W3**												
35	**UELP307D1W3**	56	210	160	56	17	25	20	106	60	51.6	18.3	M14
1 1/4	**UELP307-104D1W3**												
1 5/16	**UELP307-105D1W3**	2 13/64	8 9/32	6 5/16	2 7/32	21/32	31/32	25/32	4 3/16	2 3/8	2.031	0.720	1/2
1 3/8	**UELP307-106D1W3**												
1 7/16	**UELP307-107D1W3**												
40	**UELP308D1W3**	60	220	170	60	17	27	22	116	60	57.1	19.8	M14
1 1/2	**UELP308-108D1W3**	2 23/64	8 21/32	6 11/16	2 3/8	21/32	1 1/16	7/8	4 9/16	2 3/8	2.248	0.780	1/2
1 9/16	**UELP308-109D1W3**												
45	**UELP309D1W3**	67	245	190	67	20	30	24	129	65	58.7	19.8	M16
1 5/8	**UELP309-110D1W3**												
1 11/16	**UELP309-111D1W3**	2 41/64	9 21/32	7 15/32	2 5/8	25/32	1 3/16	15/16	5 3/32	2 9/16	2.311	0.780	5/8
1 3/4	**UELP309-112D1W3**												
50	**UELP310D1W3**	75	275	212	75	20	35	27	143	75	66.6	24.6	M16
1 13/16	**UELP310-113D1W3**												
1 7/8	**UELP310-114D1W3**	2 61/64	10 13/16	8 11/32	2 15/16	25/32	1 3/8	1 1/16	5 5/8	2 15/16	2.622	0.969	5/8
1 15/16	**UELP310-115D1W3**												

Note (1) These numbers indicate relubricatable type. If maintenance free type is needed, please order without suffix "D1".
Remarks Please refer to page **A21** for size of grease fitting.

Bearing number	Housing number	Mass of unit kg lb
UEL305D1W3	P305D1	1.5
UEL305-013D1W3	P305D1	
UEL305-014D1W3	P305D1	3.3
UEL305-015D1W3	P305D1	
UEL305-100D1W3	P305D1	
UEL306D1W3	P306D1	1.9
UEL306-101D1W3	P306D1	
UEL306-102D1W3	P306D1	4.2
UEL306-103D1W3	P306D1	
UEL307D1W3	P307D1	2.6
UEL307-104D1W3	P307D1	
UEL307-105D1W3	P307D1	5.7
UEL307-106D1W3	P307D1	
UEL307-107D1W3	P307D1	
UEL308D1W3	P308D1	3.2
UEL308-108D1W3	P308D1	7.1
UEL308-109D1W3	P308D1	
UEL309D1W3	P309D1	4.2
UEL309-110D1W3	P309D1	
UEL309-111D1W3	P309D1	9.3
UEL309-112D1W3	P309D1	
UEL310D1W3	P310D1	5.8
UEL310-113D1W3	P310D1	
UEL310-114D1W3	P310D1	13
UEL310-115D1W3	P310D1	

Pillow block unit, cast housing
Eccentric locking collar type

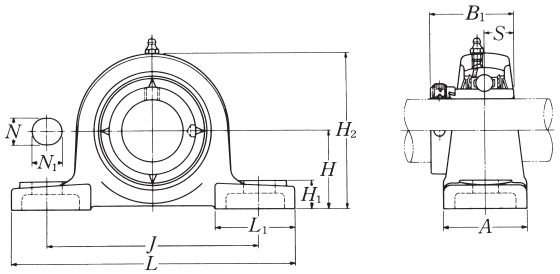

Shaft dia. mm inch	Unit number (1)	Nominal dimensions mm inch H	L	J	A	N	N_1	H_1	H_2	L_1	B_1	S	Bolt size mm inch
55	**UELP311D1W3**	80	310	236	80	20	38	30	154	85	73	27.8	M16
2	**UELP311-200D1W3**												
2 1/16	**UELP311-201D1W3**	3 5/32	12 7/32	9 9/32	3 5/32	25/32	1 1/2	1 3/16	6 1/16	3 11/32	2.874	1.094	5/8
2 1/8	**UELP311-202D1W3**												
2 3/16	**UELP311-203D1W3**												
60	**UELP312D1W3**	85	330	250	85	25	38	32	165	95	79.4	30.95	M20
2 1/4	**UELP312-204D1W3**												
2 5/16	**UELP312-205D1W3**	3 11/32	13	9 27/32	3 11/32	31/32	1 1/2	1 1/4	6 1/2	3 3/4	3.126	1.219	3/4
2 3/8	**UELP312-206D1W3**												
2 7/16	**UELP312-207D1W3**												
65	**UELP313D1W3**	90	340	260	90	25	38	33	176	105	85.7	32.55	M20
2 1/2	**UELP313-208D1W3**	3 35/64	13 3/8	10 1/4	3 17/32	31/32	1 1/2	1 5/16	6 15/16	4 1/8	3.374	1.281	3/4
2 9/16	**UELP313-209D1W3**												
70	**UELP314D1W3**	95	360	280	90	27	40	35	187	105	92.1	34.15	M22
2 5/8	**UELP314-210D1W3**												
2 11/16	**UELP314-211D1W3**	3 47/64	14 3/16	11 1/32	3 17/32	1 1/16	1 9/16	1 3/8	7 3/8	4 1/8	3.626	1.344	7/8
2 3/4	**UELP314-212D1W3**												
75	**UELP315D1W3**	100	380	290	100	27	40	35	198	110	100	37.3	M22
2 13/16	**UELP315-213D1W3**												
2 7/8	**UELP315-214D1W3**	3 15/16	14 31/32	11 13/32	3 15/16	1 1/16	1 9/16	1 3/8	7 25/32	4 11/32	3.937	1.469	7/8
2 15/16	**UELP315-215D1W3**												
3	**UELP315-300D1W3**												
80	**UELP316D1W3**	106	400	300	110	27	40	40	210	110	106.4	40.5	M22
3 1/16	**UELP316-301D1W3**												
3 1/8	**UELP316-302D1W3**	4 11/64	15 3/4	11 13/16	4 11/32	1 1/16	1 9/16	1 9/16	8 9/32	4 11/32	4.189	1.594	7/8
3 3/16	**UELP316-303D1W3**												

Note (1) These numbers indicate relubricatable type. If maintenance free type is needed, please order without suffix "D1".
Remarks Please refer to page **A21** for size of grease fitting.

Bearing number	Housing number	Mass of unit kg lb
UEL311D1W3	P311D1	7.6
UEL311-200D1W3	P311D1	
UEL311-201D1W3	P311D1	17
UEL311-202D1W3	P311D1	
UEL311-203D1W3	P311D1	
UEL312D1W3	P312D1	9.7
UEL312-204D1W3	P312D1	
UEL312-205D1W3	P312D1	21
UEL312-206D1W3	P312D1	
UEL312-207D1W3	P312D1	
UEL313D1W3	P313D1	11
UEL313-208D1W3	P313D1	24
UEL313-209D1W3	P313D1	
UEL314D1W3	P314D1	12
UEL314-210D1W3	P314D1	
UEL314-211D1W3	P314D1	26
UEL314-212D1W3	P314D1	
UEL315D1W3	P315D1	15
UEL315-213D1W3	P315D1	
UEL315-214D1W3	P315D1	33
UEL315-215D1W3	P315D1	
UEL315-300D1W3	P315D1	
UEL316D1W3	P316D1	18
UEL316-301D1W3	P316D1	
UEL316-302D1W3	P316D1	40
UEL316-303D1W3	P316D1	

Pillow block unit, cast housing
Eccentric locking collar type

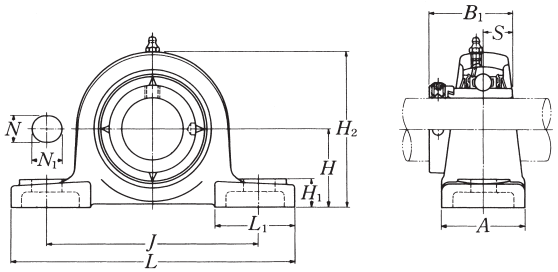

Shaft dia. mm / inch	Unit number (1)	Nominal dimensions mm / inch H	L	J	A	N	N_1	H_1	H_2	L_1	B_1	S	Bolt size mm / inch
85	UELP317D1W3	112	420	320	110	33	45	40	220	120	109.5	42.05	M27
3 1/4	UELP317-304D1W3												
3 5/16	UELP317-305D1W3	4 13/32	16 17/32	12 19/32	4 11/32	1 5/16	1 25/32	1 9/16	8 21/32	4 23/32	4.311	1.656	1
3 7/16	UELP317-307D1W3												
90	UELP318D1W3	118	430	330	110	33	45	45	235	120	115.9	43.65	M27
3 7/16	UELP318-307D1W3	4 41/64	16 15/16	13	4 11/32	1 5/16	1 25/32	1 25/32	9 1/4	4 23/32	4.563	1.719	1
3 1/2	UELP318-308D1W3												
95	UELP319D1W3	125	470	360	120	36	50	45	250	125	122.3	38.9	M30
3 5/8	UELP319-310D1W3												
3 11/16	UELP319-311D1W3	4 59/64	18 1/2	14 3/16	4 23/32	1 13/32	1 31/32	1 25/32	9 27/32	4 29/32	4.815	1.531	1 1/8
3 3/4	UELP319-312D1W3												
100	UELP320D1W3	140	490	380	120	36	50	50	275	130	128.6	50	M30
3 13/16	UELP320-313D1W3												
3 7/8	UELP320-314D1W3	5 33/64	19 9/32	14 31/32	4 23/32	1 13/32	1 31/32	1 31/32	10 13/16	5 1/8	5.063	1.969	1 1/8
3 15/16	UELP320-315D1W3												
4	UELP320-400D1W3												
105	UELP321D1W3	140	490	380	120	36	50	50	280	130	139.7	48.4	M30
110	UELP322D1W3	150	520	400	140	40	55	55	300	135	141.3	49.2	M33

Note (1) These numbers indicate relubricatable type. If maintenance free type is needed, please order without suffix "D1".
Remarks Please refer to page **A21** for size of grease fitting.

Bearing number	Housing number	Mass of unit kg / lb
UEL317D1W3	P317D1	21
UEL317-304D1W3	P317D1	
UEL317-305D1W3	P317D1	46
UEL317-307D1W3	P317D1	
UEL318D1W3	P318D1	23
UEL318-307D1W3	P318D1	51
UEL318-308D1W3	P318D1	
UEL319D1W3	P319D1	28
UEL319-310D1W3	P319D1	
UEL319-311D1W3	P319D1	62
UEL319-312D1W3	P319D1	
UEL320D1W3	P320D1	35
UEL320-313D1W3	P320D1	
UEL320-314D1W3	P320D1	77
UEL320-315D1W3	P320D1	
UEL320-400D1W3	P320D1	
UEL321D1W3	P321D1	37
UEL322D1W3	P322D1	46

Pillow block unit, cast housing low center height
Eccentric locking collar type

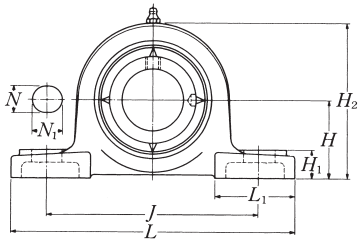

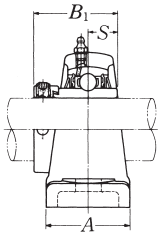

Shaft dia. mm / inch	Unit number (1)(2)(3)	Nominal dimensions mm / inch H	L	J	A	N	N_1	H_1	H_2	L_1	B_1	S	Bolt size mm / inch
20	**UELPL204D1W3**	31.75	127	95	38	13	16	14	64	42	43.7	17.1	M10
3/4	**UELPL204-012D1W3**	1 1/4	5	3 3/4	1 1/2	1/2	5/8	9/16	2 17/32	1 21/32	1.720	0.673	3/8
25	**UELPL205D1W3**	33.34	140	105	38	13	16	15	68	42	44.4	17.45	M10
13/16	**UELPL205-013D1W3**												
7/8	**UELPL205-014D1W3**												
15/16	**UELPL205-015D1W3**	1 5/16	5 1/2	4 1/8	1 1/2	1/2	5/8	19/32	2 11/16	1 21/32	1.748	0.687	3/8
1	**UELPL205-100D1W3**												
30	**UELPL206D1W3**	39.69	165	121	48	17	20	17	80	54	48.4	18.25	M14
1 1/16	**UELPL206-101D1W3**												
1 1/8	**UELPL206-102D1W3**												
1 3/16	**UELPL206-103D1W3**	1 9/16	6 1/2	4 3/4	1 7/8	21/32	25/32	21/32	3 5/32	2 1/8	1.906	0.719	1/2
1 1/4	**UELPL206-104D1W3**												
35	**UELPL207D1W3**	46.04	167	127	48	17	20	18	91	54	51.1	18.8	M14
1 1/4	**UELPL207-104D1W3**												
1 5/16	**UELPL207-105D1W3**												
1 3/8	**UELPL207-106D1W3**	1 13/16	6 9/16	5	1 7/8	21/32	25/32	23/32	3 19/32	2 1/8	2.012	0.740	1/2
1 7/16	**UELPL207-107D1W3**												
45	**UELPL209D1W3**	52.39	190	146	54	17	20	20	104	60	56.3	21.4	M14
1 5/8	**UELPL209-110D1W3**												
1 11/16	**UELPL209-111D1W3**	2 1/16	7 15/32	5 3/4	2 1/8	21/32	25/32	25/32	4 3/32	2 3/8	2.217	0.843	1/2
1 3/4	**UELPL209-112D1W3**												
50	**UELPL210D1W3**	55.56	206	159	60	20	23	21	112	65	62.7	24.6	M16
1 13/16	**UELPL210-113D1W3**												
1 7/8	**UELPL210-114D1W3**												
1 15/16	**UELPL210-115D1W3**	2 3/16	8 1/8	6 1/4	2 3/8	25/32	29/32	13/16	4 13/32	2 9/16	2.469	0.969	5/8
2	**UELPL210-200D1W3**												

Notes (1) These numbers indicate relubricatable type. If maintenance free type is needed, please order without suffix "D1".
(2) UELPL204 and UELPL205 has solid bases.
(3) UELPL208 has the same dimension as UELP208 shown in page **B148**.

Remarks Please refer to page **A21** for size of grease fitting.

Bearing number	Housing number	Mass of unit kg / lb
UEL204D1W3	PL204D1	0.8
UEL204-012D1W3	PL204D1	1.8
UEL205D1W3	PL205D1	0.9
UEL205-013D1W3	PL205D1	
UEL205-014D1W3	PL205D1	
UEL205-015D1W3	PL205D1	2.0
UEL205-100D1W3	PL205D1	
UEL206D1W3	PL206D1	1.4
UEL206-101D1W3	PL206D1	
UEL206-102D1W3	PL206D1	
UEL206-103D1W3	PL206D1	3.1
UEL206-104D1W3	PL206D1	
UEL207D1W3	PL207D1	1.7
UEL207-104D1W3	PL207D1	
UEL207-105D1W3	PL207D1	
UEL207-106D1W3	PL207D1	3.7
UEL207-107D1W3	PL207D1	
UEL209D1W3	PL209D1	2.3
UEL209-110D1W3	PL209D1	
UEL209-111D1W3	PL209D1	5.1
UEL209-112D1W3	PL209D1	
UEL210D1W3	PL210D1	3.0
UEL210-113D1W3	PL210D1	
UEL210-114D1W3	PL210D1	6.6
UEL210-115D1W3	PL210D1	
UEL210-200D1W3	PL210D1	

Pillow block unit, cast housing low center height
Eccentric locking collar type

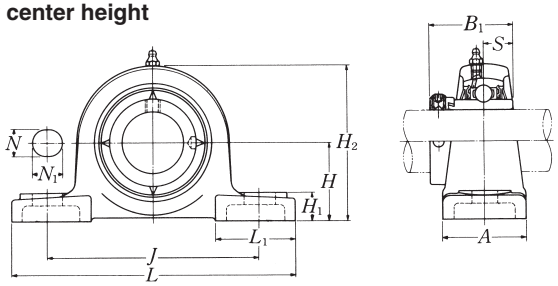

Shaft dia. mm inch	Unit number (1)	Nominal dimensions mm inch H	L	J	A	N	N_1	H_1	H_2	L_1	B_1	S	Bolt size mm inch
55	**UELPL211D1W3**	61.91	219	171	60	20	23	23	124	65	71.4	27.75	M16
2	**UELPL211-200D1W3**												
2 1/16	**UELPL211-201D1W3**	2 7/16	8 5/8	6 23/32	2 3/8	25/32	29/32	29/32	4 7/8	2 9/16	2.811	1.093	5/8
2 1/8	**UELPL211-202D1W3**												
2 3/16	**UELPL211-203D1W3**												
60	**UELPL212D1W3**	68.26	241	184	70	20	23	25	136	70	77.8	30.95	M16
2 1/4	**UELPL212-204D1W3**												
2 5/16	**UELPL212-205D1W3**	2 11/16	9 1/2	7 1/4	2 3/4	25/32	29/32	31/32	5 11/32	2 3/4	3.063	1.219	5/8
2 3/8	**UELPL212-206D1W3**												
2 7/16	**UELPL212-207D1W3**												

Note (1) These numbers indicate relubricatable type. If maintenance free type is needed, please order without suffix "D1".
Remarks Please refer to page **A21** for size of grease fitting.

Bearing number	Housing number	Mass of unit kg lb
UEL211D1W3	PL211D1	3.7
UEL211-200D1W3	PL211D1	
UEL211-201D1W3	PL211D1	8.2
UEL211-202D1W3	PL211D1	
UEL211-203D1W3	PL211D1	
UEL212D1W3	PL212D1	5.0
UEL212-204D1W3	PL212D1	
UEL212-205D1W3	PL212D1	11
UEL212-206D1W3	PL212D1	
UEL212-207D1W3	PL212D1	

Pillow block unit, cast housing high center height
Eccentric locking collar type

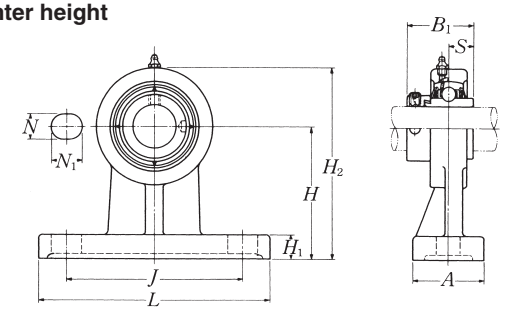

Shaft dia. mm / inch	Unit number (1)	Nominal dimensions mm / inch H	L	J	A	N	N_1	H_1	H_2	B_1	S	Bolt size mm / inch
20	UELHP204D1W3	70	127	95	40	13	19	13	101	43.7	17.1	M10
3/4	UELHP204-012D1W3	2 3/4	5	3 3/4	1 9/16	1/2	3/4	1/2	3 31/32	1.720	0.673	3/8
25	UELHP205D1W3	80	142	105	50	13	19	13	114	44.4	17.45	M10
13/16	UELHP205-013D1W3											
7/8	UELHP205-014D1W3	3 5/32	5 19/32	4 1/8	1 31/32	1/2	3/4	1/2	4 1/2	1.748	0.687	3/8
15/16	UELHP205-015D1W3											
1	UELHP205-100D1W3											
30	UELHP206D1W3	90	165	120	50	17	21	16	130	48.4	18.25	M14
1 1/16	UELHP206-101D1W3											
1 1/8	UELHP206-102D1W3	3 35/64	6 1/2	4 23/32	1 31/32	21/32	13/16	5/8	5 1/8	1.906	0.719	1/2
1 3/16	UELHP206-103D1W3											
1 1/4	UELHP206-104D1W3											
35	UELHP207D1W3	95	166	127	60	17	21	18	140	51.1	18.8	M14
1 1/4	UELHP207-104D1W3											
1 5/16	UELHP207-105D1W3	3 47/64	6 17/32	5	2 3/8	21/32	13/16	23/32	5 1/2	2.012	0.740	1/2
1 3/8	UELHP207-106D1W3											
1 7/16	UELHP207-107D1W3											
40	UELHP208D1W3	100	184	136	70	17	21	20	150	56.3	21.4	M14
1 1/2	UELHP208-108D1W3	3 15/16	7 1/4	5 11/32	2 3/4	21/32	13/16	25/32	5 29/32	2.217	0.843	1/2
1 9/16	UELHP208-109D1W3											
45	UELHP209D1W3	105	190	146	70	17	22	20	158	56.3	21.4	M14
1 5/8	UELHP209-110D1W3											
1 11/16	UELHP209-111D1W3	4 9/64	7 15/32	5 3/4	2 3/4	21/32	7/8	25/32	6 7/32	2.217	0.843	1/2
1 3/4	UELHP209-112D1W3											
50	UELHP210D1W3	110	206	159	70	20	22	22	165	62.7	24.6	M16
1 13/16	UELHP210-113D1W3											
1 7/8	UELHP210-114D1W3	4 21/64	8 1/8	6 1/4	2 3/4	25/32	7/8	7/8	6 1/2	2.469	0.969	5/8
1 15/16	UELHP210-115D1W3											
2	UELHP210-200D1W3											

Note (1) These numbers indicate relubricatable type. If maintenance free type is needed, please order without suffix "D1".
Remarks Please refer to page **A21** for size of grease fitting.

Bearing number	Housing number	Mass of unit kg / lb
UEL204D1W3	HP204D1	0.9
UEL204-012D1W3	HP204D1	2.0
UEL205D1W3	HP205D1	1.3
UEL205-013D1W3	HP205D1	
UEL205-014D1W3	HP205D1	2.9
UEL205-015D1W3	HP205D1	
UEL205-100D1W3	HP205D1	
UEL206D1W3	HP206D1	1.9
UEL206-101D1W3	HP206D1	
UEL206-102D1W3	HP206D1	4.2
UEL206-103D1W3	HP206D1	
UEL206-104D1W3	HP206D1	
UEL207D1W3	HP207D1	2.4
UEL207-104D1W3	HP207D1	
UEL207-105D1W3	HP207D1	5.3
UEL207-106D1W3	HP207D1	
UEL207-107D1W3	HP207D1	
UEL208D1W3	HP208D1	3.3
UEL208-108D1W3	HP208D1	7.3
UEL208-109D1W3	HP208D1	
UEL209D1W3	HP209D1	3.7
UEL209-110D1W3	HP209D1	
UEL209-111D1W3	HP209D1	8.2
UEL209-112D1W3	HP209D1	
UEL210D1W3	HP210D1	4.1
UEL210-113D1W3	HP210D1	
UEL210-114D1W3	HP210D1	9.0
UEL210-115D1W3	HP210D1	
UEL210-200D1W3	HP210D1	

Narrow pillow block unit, cast housing
Eccentric locking collar type

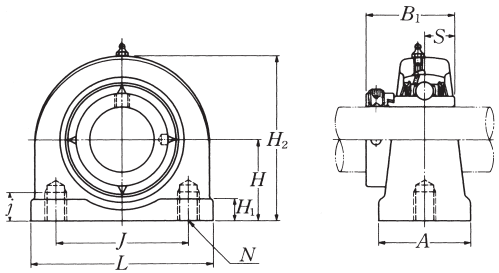

Shaft dia. mm / inch	Unit number (1)	Nominal dimensions mm / inch H	L	J	A	j	H_1	H_2	B_1	S	N	Bearing number	Housing number	Mass of unit kg / lb
20	**UELUP204D1W3**	30.2	76	52	38	13	11	62	43.7	17.1	M10×1.5	UEL204D1W3	UP204D1	0.6
3/4	**UELUP204-012D1W3**	1 3/16	3	2 1/16	1 1/2	1/2	7/16	2 7/16	1.720	0.673	M10×1.5	UEL204-012D1W3	UP204D1	1.3
25	**UELUP205D1W3**	36.5	84	56	38	15	12	72	44.4	17.45	M10×1.5	UEL205D1W3	UP205D1	0.8
13/16	**UELUP205-013D1W3**											UEL205-013D1W3	UP205D1	
7/8	**UELUP205-014D1W3**											UEL205-014D1W3	UP205D1	
15/16	**UELUP205-015D1W3**	1 7/16	3 5/16	2 7/32	1 1/2	19/32	15/32	2 27/32	1.748	0.687	M10×1.5	UEL205-015D1W3	UP205D1	1.8
1	**UELUP205-100D1W3**											UEL205-100D1W3	UP205D1	
30	**UELUP206D1W3**	42.9	94	66	48	18	12	84	48.4	18.25	M14×2	UEL206D1W3	UP206D1	1.3
1 1/16	**UELUP206-101D1W3**											UEL206-101D1W3	UP206D1	
1 1/8	**UELUP206-102D1W3**											UEL206-102D1W3	UP206D1	
1 3/16	**UELUP206-103D1W3**	1 11/16	3 11/16	2 19/32	1 7/8	23/32	15/32	3 5/16	1.906	0.719	M14×2	UEL206-103D1W3	UP206D1	2.9
1 1/4	**UELUP206-104D1W3**											UEL206-104D1W3	UP206D1	
35	**UELUP207D1W3**	47.6	110	80	48	20	13	95	51.1	18.8	M14×2	UEL207D1W3	UP207D1	1.7
1 1/4	**UELUP207-104D1W3**											UEL207-104D1W3	UP207D1	
1 5/16	**UELUP207-105D1W3**											UEL207-105D1W3	UP207D1	
1 3/8	**UELUP207-106D1W3**	1 7/8	4 11/32	3 5/32	1 7/8	25/32	1/2	3 3/4	2.012	0.740	M14×2	UEL207-106D1W3	UP207D1	3.7
1 7/16	**UELUP207-107D1W3**											UEL207-107D1W3	UP207D1	
40	**UELUP208D1W3**	49.2	116	84	54	20	13	100	56.3	21.4	M14×2	UEL208D1W3	UP208D1	2.0
1 1/2	**UELUP208-108D1W3**	1 15/16	4 9/16	3 5/16	2 1/8	25/32	1/2	3 15/16	2.217	0.843	M14×2	UEL208-108D1W3	UP208D1	4.4
1 9/16	**UELUP208-109D1W3**											UEL208-109D1W3	UP208D1	
45	**UELUP209D1W3**	54.2	120	90	54	25	13	108	56.3	21.4	M14×2	UEL209D1W3	UP209D1	2.3
1 5/8	**UELUP209-110D1W3**											UEL209-110D1W3	UP209D1	
1 11/16	**UELUP209-111D1W3**	2 9/64	4 23/32	3 17/32	2 1/8	31/32	1/2	4 1/4	2.217	0.843	M14×2	UEL209-111D1W3	UP209D1	5.1
1 3/4	**UELUP209-112D1W3**											UEL209-112D1W3	UP209D1	
50	**UELUP210D1W3**	57.2	130	94	60	25	14	116	62.7	24.6	M16×2	UEL210D1W3	UP210D1	2.8
1 13/16	**UELUP210-113D1W3**											UEL210-113D1W3	UP210D1	
1 7/8	**UELUP210-114D1W3**											UEL210-114D1W3	UP210D1	
1 15/16	**UELUP210-115D1W3**	2 1/4	5 1/8	3 11/16	2 3/8	31/32	9/16	4 9/16	2.469	0.969	M16×2	UEL210-115D1W3	UP210D1	6.2
2	**UELUP210-200D1W3**											UEL210-200D1W3	UP210D1	

Note (1) These numbers indicate relubricatable type. If maintenance free type is needed, please order without suffix "D1".
Remarks Please refer to page **A21** for size of grease fitting.

Pillow block unit, cast housing low center height
Eccentric locking collar type

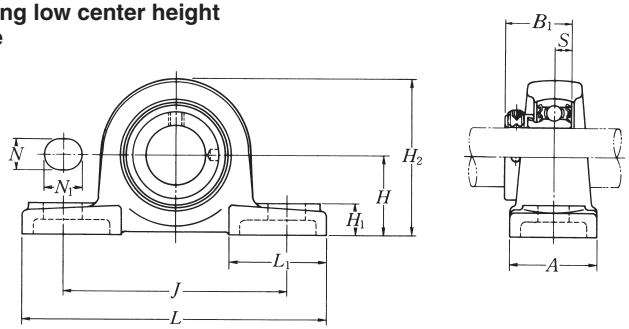

Shaft dia. mm / inch	Unit number (1)(2)	Nominal dimensions mm / inch H	L	J	A	N	N_1	H_1	H_2	L_1	B_1	S	Bolt size mm / inch
12	AELPL201W3	26.99	121	89	35	11	14	13	54	40	28.6	6.5	M10
1/2	AELPL201-008W3	1 1/16	4 3/4	3 1/2	1 3/8	7/16	9/16	1/2	2 1/8	1 9/16	1.126	0.256	3/8
15	AELPL202W3	26.99	121	89	35	11	14	13	54	40	28.6	6.5	M10
9/16	AELPL202-009W3	1 1/16	4 3/4	3 1/2	1 3/8	7/16	9/16	1/2	2 1/8	1 9/16	1.126	0.256	3/8
5/8	AELPL202-010W3												
17	AELPL203W3	26.99	121	89	35	11	14	13	54	40	28.6	6.5	M10
11/16	AELPL203-011W3	1 1/16	4 3/4	3 1/2	1 3/8	7/16	9/16	1/2	2 1/8	1 9/16	1.126	0.256	3/8
20	AELPL204W3	31.75	127	95	38	13	16	14	64	42	31	7.5	M10
3/4	AELPL204-012W3	1 1/4	5	3 3/4	1 1/2	1/2	5/8	9/16	2 17/32	1 21/32	1.220	0.295	3/8
25	AELPL205W3	33.34	140	105	38	13	16	15	68	42	31	7.5	M10
13/16	AELPL205-013W3	1 5/16	5 1/2	4 1/8	1 1/2	1/2	5/8	19/32	2 11/16	1 21/32	1.220	0.295	3/8
7/8	AELPL205-014W3												
15/16	AELPL205-015W3												
1	AELPL205-100W3												
30	AELPL206W3	39.69	165	121	48	17	20	17	80	54	35.7	9	M14
1 1/16	AELPL206-101W3	1 9/16	6 1/2	4 3/4	1 7/8	21/32	25/32	21/32	3 5/32	2 1/8	1.406	0.354	1/2
1 1/8	AELPL206-102W3												
1 3/16	AELPL206-103W3												
1 1/4	AELPL206-104W3												
35	AELPL207W3	46.04	167	127	48	17	20	18	91	54	38.9	9.5	M14
1 1/4	AELPL207-104W3	1 13/16	6 9/16	5	1 7/8	21/32	25/32	23/32	3 19/32	2 1/8	1.531	0.374	1/2
1 5/16	AELPL207-105W3												
1 3/8	AELPL207-106W3												
1 7/16	AELPL207-107W3												

Notes (1) AELPL201 to AELPL205 has solid base.
(2) If relubricatable type is needed, please order with suffix "D1".

Bearing number	Housing number	Mass of unit kg / lb
AEL201W3	PL201	0.5
AEL201-008W3	PL201	1.1
AEL202W3	PL201	0.5
AEL202-009W3	PL201	1.1
AEL202-010W3	PL201	
AEL203W3	PL201	0.5
AEL203-011W3	PL201	1.1
AEL204W3	PL204	0.7
AEL204-012W3	PL204	1.5
AEL205W3	PL205	0.8
AEL205-013W3	PL205	1.8
AEL205-014W3	PL205	
AEL205-015W3	PL205	
AEL205-100W3	PL205	
AEL206W3	PL206	1.3
AEL206-101W3	PL206	2.9
AEL206-102W3	PL206	
AEL206-103W3	PL206	
AEL206-104W3	PL206	
AEL207W3	PL207	1.6
AEL207-104W3	PL207	3.5
AEL207-105W3	PL207	
AEL207-106W3	PL207	
AEL207-107W3	PL207	

Pillow block unit, cast housing low center height
Eccentric locking collar type

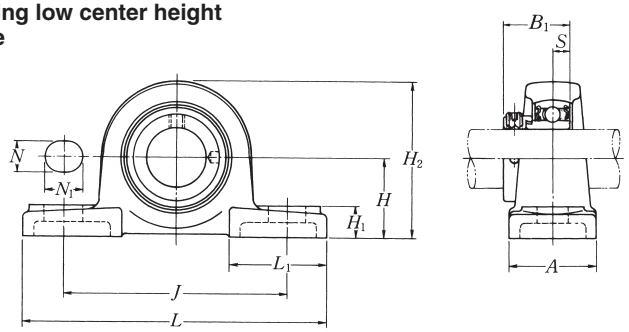

Shaft dia. mm / inch	Unit number (1)(2)	Nominal dimensions mm / inch H	L	J	A	N	N_1	H_1	H_2	L_1	B_1	S	Bolt size mm / inch
12	JELPL201W3	26.99	121	89	35	11	14	13	54	40	28.6	6.5	M10
1/2	JELPL201-008W3	1 1/16	4 3/4	3 1/2	1 3/8	7/16	9/16	1/2	2 1/8	1 9/16	1.126	0.256	3/8
15	JELPL202W3	26.99	121	89	35	11	14	13	54	40	28.6	6.5	M10
9/16	JELPL202-009W3	1 1/16	4 3/4	3 1/2	1 3/8	7/16	9/16	1/2	2 1/8	1 9/16	1.126	0.256	3/8
5/8	JELPL202-010W3												
17	JELPL203W3	26.99	121	89	35	11	14	13	54	40	28.6	6.5	M10
11/16	JELPL203-011W3	1 1/16	4 3/4	3 1/2	1 3/8	7/16	9/16	1/2	2 1/8	1 9/16	1.126	0.256	3/8
20	JELPL204W3	31.75	127	95	38	13	16	14	64	42	31	7.5	M10
3/4	JELPL204-012W3	1 1/4	5	3 3/4	1 1/2	1/2	5/8	9/16	2 17/32	1 21/32	1.220	0.295	3/8
25	JELPL205W3	33.34	140	105	38	13	16	15	68	42	31	7.5	M10
13/16	JELPL205-013W3	1 5/16	5 1/2	4 1/8	1 1/2	1/2	5/8	19/32	2 11/16	1 21/32	1.220	0.295	3/8
7/8	JELPL205-014W3												
15/16	JELPL205-015W3												
1	JELPL205-100W3												
30	JELPL206W3	39.69	165	121	48	17	20	17	80	54	35.7	9	M14
1 1/16	JELPL206-101W3	1 9/16	6 1/2	4 3/4	1 7/8	21/32	25/32	21/32	3 5/32	2 1/8	1.406	0.354	1/2
1 1/8	JELPL206-102W3												
1 3/16	JELPL206-103W3												
1 1/4	JELPL206-104W3												
35	JELPL207W3	46.04	167	127	48	17	20	18	91	54	38.9	9.5	M14
1 1/4	JELPL207-104W3	1 13/16	6 9/16	5	1 7/8	21/32	25/32	23/32	3 19/32	2 1/8	1.531	0.374	1/2
1 5/16	JELPL207-105W3												
1 3/8	JELPL207-106W3												
1 7/16	JELPL207-107W3												

Notes (1) JELPL201 to JELPL205 have solid bases.
(2) If relubricatable type is needed, please order with suffix "D1".

Bearing number	Housing number	Mass of unit kg / lb
JEL201W3	PL201	0.5
JEL201-008W3	PL201	1.1
JEL202W3	PL201	0.5
JEL202-009W3	PL201	1.1
JEL202-010W3	PL201	
JEL203W3	PL201	0.5
JEL203-011W3	PL201	1.1
JEL204W3	PL204	0.7
JEL204-012W3	PL204	1.5
JEL205W3	PL205	0.8
JEL205-013W3	PL205	1.8
JEL205-014W3	PL205	
JEL205-015W3	PL205	
JEL205-100W3	PL205	
JEL206W3	PL206	1.3
JEL206-101W3	PL206	2.9
JEL206-102W3	PL206	
JEL206-103W3	PL206	
JEL206-104W3	PL206	
JEL207W3	PL207	1.6
JEL207-104W3	PL207	3.5
JEL207-105W3	PL207	
JEL207-106W3	PL207	
JEL207-107W3	PL207	

Pillow block unit, pressed steel housing
Eccentric locking collar type

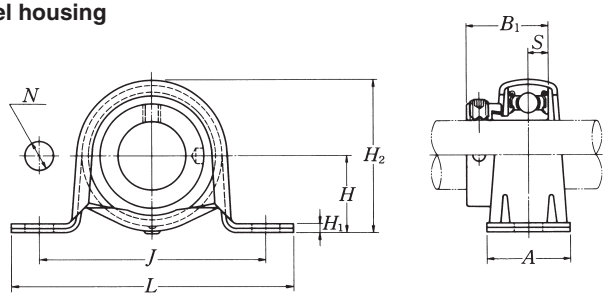

Shaft dia. mm / inch	Unit number	Nominal dimensions mm / inch H	L	J	A	N	H_1	H_2	B_1	S	Bolt size mm / inch	Max. load (1) recommended N / lbf radial	axial	Bearing number	Housing number	Mass of unit kg / lb
12	AELPP201W3	22.2	86	68	25	9.5	3.2	43.8	28.6	6.5	M8	2 000	800	AEL201W3	PP203	0.2
1/2	AELPP201-008W3	7/8	3 3/8	2 11/16	31/32	3/8	0.126	1 23/32	1.126	0.256	5/16	440	160	AEL201-008W3	PP203	0.4
15	AELPP202W3	22.2	86	68	25	9.5	3.2	43.8	28.6	6.5	M8	2 000	800	AEL202W3	PP203	0.2
9/16	AELPP202-009W3	7/8	3 3/8	2 11/16	31/32	3/8	0.126	1 23/32	1.126	0.256	5/16	440	160	AEL202-009W3	PP203	0.4
5/8	AELPP202-010W3													AEL202-010W3	PP203	
17	AELPP203W3	22.2	86	68	25	9.5	3.2	43.8	28.6	6.5	M8	2 000	800	AEL203W3	PP203	0.2
11/16	AELPP203-011W3	7/8	3 3/8	2 11/16	31/32	3/8	0.126	1 23/32	1.126	0.256	5/16	440	160	AEL203-011W3	PP203	0.4
20	AELPP204W3	25.4	98	76	32	9.5	3.2	50.5	31	7.5	M8	2 500	1 000	AEL204W3	PP204	0.3
3/4	AELPP204-012W3	1	3 27/32	3	1 1/4	3/8	0.126	2	1.220	0.295	5/16	550	200	AEL204-012W3	PP204	0.7
25	AELPP205W3	28.6	108	86	32	11.5	4	56.6	31	7.5	M10	3 500	1 400	AEL205W3	PP205	0.3
13/16	AELPP205-013W3	1 1/8	4 1/4	3 3/8	1 1/4	29/64	0.157	2 7/32	1.220	0.295	3/8	770	280	AEL205-013W3	PP205	0.7
7/8	AELPP205-014W3													AEL205-014W3	PP205	
15/16	AELPP205-015W3													AEL205-015W3	PP205	
1	AELPP205-100W3													AEL205-100W3	PP205	
30	AELPP206W3	33.3	117	95	38	11.5	4	66.3	35.7	9	M10	4 000	1 600	AEL206W3	PP206	0.5
1 1/16	AELPP206-101W3	1 5/16	4 19/32	3 3/4	1 1/2	29/64	0.157	2 5/8	1.406	0.354	3/8	880	320	AEL206-101W3	PP206	1.1
1 1/8	AELPP206-102W3													AEL206-102W3	PP206	
1 3/16	AELPP206-103W3													AEL206-103W3	PP206	
1 1/4	AELPP206-104W3													AEL206-104W3	PP206	
35	AELPP207W3	39.7	129	106	42	11.5	4.6	78	38.9	9.5	M10	4 500	1 800	AEL207W3	PP207	0.8
1 1/4	AELPP207-104W3	1 9/16	5 3/32	4 3/16	1 21/32	29/64	0.181	3 1/16	1.531	0.374	3/8	990	360	AEL207-104W3	PP207	1.8
1 5/16	AELPP207-105W3													AEL207-105W3	PP207	
1 3/8	AELPP207-106W3													AEL207-106W3	PP207	
1 7/16	AELPP207-107W3													AEL207-107W3	PP207	

Note (1) The permissible load only applies in applications where the load is stable and the speed is 2400 min^{-1} or less.
The mounting surface should be flat.

Pillow block unit, pressed steel housing with rubber ring
Eccentric locking collar type

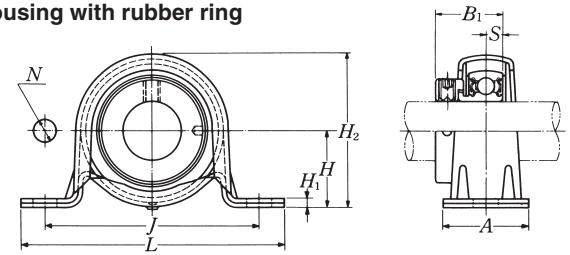

Shaft dia. mm / inch	Unit number	Nominal dimensions mm / inch H	L	J	A	N	H_1	H_2	B_1	S	Bolt size mm / inch
12	AELRPP201W3	25.4	98	76	32	9.5	3.2	50.5	28.6	6.5	M8
1/2	AELRPP201-008W3	1	3 27/32	3	1 1/4	3/8	0.126	2	1.126	0.256	5/16
15	AELRPP202W3	25.4	98	76	32	9.5	3.2	50.5	28.6	6.5	M8
9/16	AELRPP202-009W3	1	3 27/32	3	1 1/4	3/8	0.126	2	1.126	0.256	5/16
5/8	AELRPP202-010W3										
17	AELRPP203W3	25.4	98	76	32	9.5	3.2	50.5	28.6	6.5	M8
11/16	AELRPP203-011W3	1	3 27/32	3	1 1/4	3/8	0.126	2	1.126	0.256	5/16
20	AELRPP204W3	28.6	108	86	32	11.5	4	56.6	31	7.5	M10
3/4	AELRPP204-012W3	1 1/8	4 1/4	3 3/8	1 1/4	29/64	0.157	2 7/32	1.220	0.295	3/8
25	AELRPP205W3	33.3	117	95	38	11.5	4	66.3	31	7.5	M10
13/16	AELRPP205-013W3	1 5/16	4 19/32	3 3/4	1 1/2	29/64	0.157	2 5/8	1.220	0.295	3/8
7/8	AELRPP205-014W3										
15/16	AELRPP205-015W3										
1	AELRPP205-100W3										
30	AELRPP206W3	39.7	129	106	42	11.5	4.6	78	35.7	9	M10
1 1/16	AELRPP206-101W3	1 9/16	5 3/32	4 3/16	1 21/32	29/64	0.181	3 1/16	1.406	0.354	3/8
1 1/8	AELRPP206-102W3										
1 3/16	AELRPP206-103W3										
1 1/4	AELRPP206-104W3										

Max. load (1) recommended N / lbf radial	axial	Bearing number	Housing number rubber ring	steel	Mass of unit kg / lb
1 000	200	AEL201W3	R201	PP204	0.2
220	40	AEL201-008W3	R201	PP204	0.4
1 000	200	AEL202W3	R202	PP204	0.2
220	40	AEL202-009W3	R202	PP204	0.4
		AEL202-010W3	R202	PP204	
1 000	200	AEL203W3	R203	PP204	0.2
220	40	AEL203-011W3	R203	PP204	0.4
1 150	200	AEL204W3	R204	PP205	0.3
250	40	AEL204-012W3	R204	PP205	0.7
1 300	200	AEL205W3	R205	PP206	0.4
280	40	AEL205-013W3	R205	PP206	0.9
		AEL205-014W3	R205	PP206	
		AEL205-015W3	R205	PP206	
		AEL205-100W3	R205	PP206	
1 500	200	AEL206W3	R206	PP207	0.6
330	40	AEL206-101W3	R206	PP207	1.3
		AEL206-102W3	R206	PP207	
		AEL206-103W3	R206	PP207	
		AEL206-104W3	R206	PP207	

Note (1) The permissible load only applies in applications where the load is stable and the speed is 2400 min^{-1} or less.
The mounting surface should be flat.

Remarks When an anti-vibration rubber ring is used, the self alignment capability will be reduce.

Square flanged unit, cast housing
Eccentric locking collar type

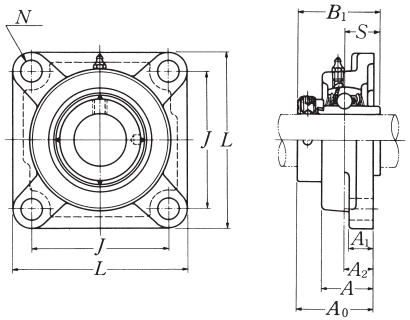

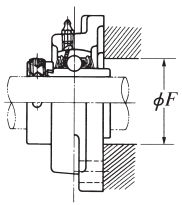

Shaft dia. mm / inch	Unit number (1)	Nominal dimensions mm inch: L	J	A_2	A_1	A	N	A_0	B_1	S	F min.	Bolt size mm / inch	Bearing number	Housing number	Mass of unit kg / lb
20	**UELF204D1W3**	86	64	15	11	25.5	12	41.6	43.7	17.1	34	M10	UEL204D1W3	F204D1	0.6
3/4	**UELF204-012D1W3**	3 3/8	2 33/64	19/32	7/16	1	15/32	1 41/64	1.720	0.673	1.339	3/8	UEL204-012D1W3	F204D1	1.3
25	**UELF205D1W3**	95	70	16	13	27	12	42.95	44.4	17.45	38	M10	UEL205D1W3	F205D1	0.9
13/16	**UELF205-013D1W3**												UEL205-013D1W3	F205D1	
7/8	**UELF205-014D1W3**												UEL205-014D1W3	F205D1	
15/16	**UELF205-015D1W3**	3 3/4	2 3/4	5/8	1/2	1 1/16	15/32	1 11/16	1.748	0.687	1.496	3/8	UEL205-015D1W3	F205D1	2.0
1	**UELF205-100D1W3**												UEL205-100D1W3	F205D1	
30	**UELF206D1W3**	108	83	18	13	31	12	48.15	48.4	18.25	45	M10	UEL206D1W3	F206D1	1.2
1 1/16	**UELF206-101D1W3**												UEL206-101D1W3	F206D1	
1 1/8	**UELF206-102D1W3**												UEL206-102D1W3	F206D1	
1 3/16	**UELF206-103D1W3**	4 1/4	3 17/64	45/64	1/2	1 7/32	15/32	1 57/64	1.906	0.719	1.772	3/8	UEL206-103D1W3	F206D1	2.6
1 1/4	**UELF206-104D1W3**												UEL206-104D1W3	F206D1	
35	**UELF207D1W3**	117	92	19	15	34	14	51.3	51.1	18.8	51	M12	UEL207D1W3	F207D1	1.6
1 1/4	**UELF207-104D1W3**												UEL207-104D1W3	F207D1	
1 5/16	**UELF207-105D1W3**												UEL207-105D1W3	F207D1	
1 3/8	**UELF207-106D1W3**	4 19/32	3 5/8	3/4	19/32	1 11/32	35/64	2 1/64	2.012	0.740	2.008	7/16	UEL207-106D1W3	F207D1	3.5
1 7/16	**UELF207-107D1W3**												UEL207-107D1W3	F207D1	
40	**UELF208D1W3**	130	102	21	15	36	16	55.9	56.3	21.4	57	M14	UEL208D1W3	F208D1	1.9
1 1/2	**UELF208-108D1W3**	5 1/8	4 1/64	53/64	19/32	1 13/32	5/8	2 13/64	2.217	0.843	2.244	1/2	UEL208-108D1W3	F208D1	4.2
1 9/16	**UELF208-109D1W3**												UEL208-109D1W3	F208D1	
45	**UELF209D1W3**	137	105	22	16	38	16	56.9	56.3	21.4	62	M14	UEL209D1W3	F209D1	2.3
1 5/8	**UELF209-110D1W3**												UEL209-110D1W3	F209D1	
1 11/16	**UELF209-111D1W3**	5 13/32	4 9/64	55/64	5/8	1 1/2	5/8	2 15/64	2.217	0.843	2.441	1/2	UEL209-111D1W3	F209D1	5.1
1 3/4	**UELF209-112D1W3**												UEL209-112D1W3	F209D1	
50	**UELF210D1W3**	143	111	22	16	40	16	60.1	62.7	24.6	67	M14	UEL210D1W3	F210D1	2.7
1 13/16	**UELF210-113D1W3**												UEL210-113D1W3	F210D1	
1 7/8	**UELF210-114D1W3**												UEL210-114D1W3	F210D1	
1 15/16	**UELF210-115D1W3**	5 5/8	4 3/8	55/64	5/8	1 9/16	5/8	2 23/64	2.469	0.969	2.638	1/2	UEL210-115D1W3	F210D1	6.0
2	**UELF210-200D1W3**												UEL210-200D1W3	F210D1	

Note (1) These numbers indicate relubricatable type. If maintenance free type is needed, please order without suffix "D1".
Remarks Please refer to page **A21** for size of grease fitting

Square flanged unit, cast housing
Eccentric locking collar type

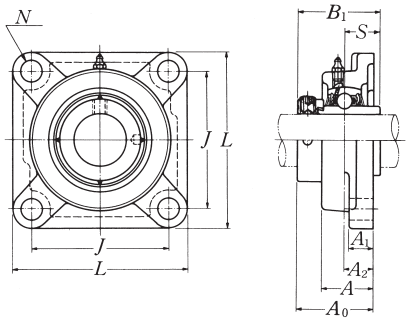

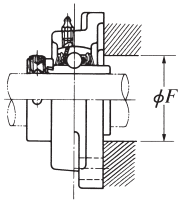

Shaft dia. mm inch	Unit number (1)	Nominal dimensions mm inch L	J	A_2	A_1	A	N	A_0	B_1	S	F min.	Bolt size mm inch	Bearing number	Housing number	Mass of unit kg lb
55	**UELF211D1W3**	162	130	25	18	43	19	68.65	71.4	27.75	73	M16	UEL211D1W3	F211D1	3.6
2	**UELF211-200D1W3**												UEL211-200D1W3	F211D1	
2 1/16	**UELF211-201D1W3**	6 3/8	5 1/8	63/64	23/32	1 11/16	3/4	2 45/64	2.811	1.093	2.874	5/8	UEL211-201D1W3	F211D1	7.9
2 1/8	**UELF211-202D1W3**												UEL211-202D1W3	F211D1	
2 3/16	**UELF211-203D1W3**												UEL211-203D1W3	F211D1	
60	**UELF212D1W3**	175	143	29	18	48	19	75.85	77.8	30.95	81	M16	UEL212D1W3	F212D1	4.2
2 1/4	**UELF212-204D1W3**												UEL212-204D1W3	F212D1	
2 5/16	**UELF212-205D1W3**	6 7/8	5 5/8	1 9/64	23/32	1 7/8	3/4	2 63/64	3.063	1.219	3.189	5/8	UEL212-205D1W3	F212D1	9.3
2 3/8	**UELF212-206D1W3**												UEL212-206D1W3	F212D1	
2 7/16	**UELF212-207D1W3**												UEL212-207D1W3	F212D1	
65	**UELF213D1W3**	187	149	30	22	50	19	81.55	85.7	34.15	87	M16	UEL213D1W3	F213D1	6.1
2 1/2	**UELF213-208D1W3**	7 3/8	5 55/64	1 3/16	7/8	1 31/32	3/4	3 13/64	3.374	1.344	3.425	5/8	UEL213-208D1W3	F213D1	13
2 9/16	**UELF213-209D1W3**												UEL213-209D1W3	F213D1	
70	**UELF214D1W3**	193	152	31	22	54	19	82.55	85.7	34.15	91	M16	UEL214D1W3	F214D1	6.6
2 5/8	**UELF214-210D1W3**												UEL214-210D1W3	F214D1	
2 11/16	**UELF214-211D1W3**	7 19/32	5 63/64	1 7/32	7/8	2 1/8	3/4	3 1/4	3.374	1.344	3.583	5/8	UEL214-211D1W3	F214D1	15
2 3/4	**UELF214-212D1W3**												UEL214-212D1W3	F214D1	
75	**UELF215D1W3**	200	159	34	22	56	19	88.7	92	37.3	97	M16	UEL215D1W3	F215D1	6.9
2 13/16	**UELF215-213D1W3**												UEL215-213D1W3	F215D1	
2 7/8	**UELF215-214D1W3**	7 7/8	6 17/64	1 11/32	7/8	2 7/32	3/4	3 31/64	3.622	1.469	3.819	5/8	UEL215-214D1W3	F215D1	15
2 15/16	**UELF215-215D1W3**												UEL215-215D1W3	F215D1	
3	**UELF215-300D1W3**												UEL215-300D1W3	F215D1	

Note (1) These numbers indicate relubricatable type. If maintenance free type is needed, please order without suffix "D1".
Remarks Please refer to page **A21** for size of grease fitting.

Square flanged unit, cast housing
Eccentric locking collar type

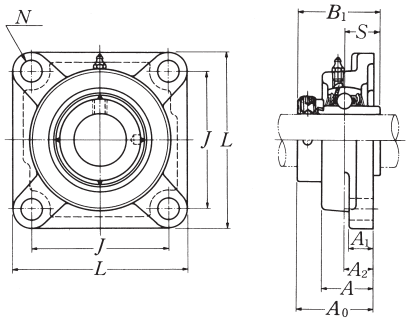

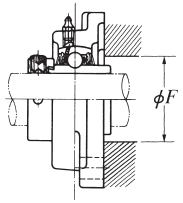

Shaft dia. mm inch	Unit number (1)(2)	Nominal dimensions mm inch L	J	A_2	A_1	A	N	A_0	B_1	S	F min.	Bolt size mm inch
25	**UELF305D1W3**	110	80	16	13	29	16	46.1	46.8	16.7	41	M14
13/16	**UELF305-013D1W3**											
7/8	**UELF305-014D1W3**	4 11/32	3 5/32	5/8	1/2	1 5/32	5/8	1 13/16	1.843	0.657	1.614	1/2
15/16	**UELF305-015D1W3**											
1	**UELF305-100D1W3**											
30	**UELF306D1W3**	125	95	18	15	32	16	50.5	50	17.5	49	M14
1 1/16	**UELF306-101D1W3**											
1 1/8	**UELF306-102D1W3**	4 29/32	3 47/64	45/64	19/32	1 1/4	5/8	1 63/64	1.969	0.689	1.929	1/2
1 3/16	**UELF306-103D1W3**											
35	**UELF307D1W3**	135	100	20	16	36	19	53.3	51.6	18.3	–	M16
1 1/4	**UELF307-104D1W3**											
1 5/16	**UELF307-105D1W3**	5 5/16	3 15/16	25/32	5/8	1 13/32	3/4	2 3/32	2.031	0.720	–	5/8
1 3/8	**UELF307-106D1W3**											
1 7/16	**UELF307-107D1W3**											
40	**UELF308D1W3**	150	112	23	17	40	19	60.3	57.1	19.8	–	M16
1 1/2	**UELF308-108D1W3**	5 29/32	4 13/32	29/32	21/32	1 9/16	3/4	2 3/8	2.248	0.780	–	5/8
1 9/16	**UELF308-109D1W3**											
45	**UELF309D1W3**	160	125	25	18	44	19	63.9	58.7	19.8	–	M16
1 5/8	**UELF309-110D1W3**											
1 11/16	**UELF309-111D1W3**	6 5/16	4 59/64	63/64	23/32	1 23/32	3/4	2 33/64	2.311	0.780	–	5/8
1 3/4	**UELF309-112D1W3**											
50	**UELF310D1W3**	175	132	28	19	48	23	70	66.6	24.6	–	M20
1 13/16	**UELF310-113D1W3**											
1 7/8	**UELF310-114D1W3**	6 7/8	5 13/64	1 7/64	3/4	1 7/8	29/32	2 3/4	2.622	0.969	–	3/4
1 15/16	**UELF310-115D1W3**											

Bearing number	Housing number	Mass of unit kg lb
UEL305D1W3	F305D1	1.2
UEL305-013D1W3	F305D1	
UEL305-014D1W3	F305D1	2.6
UEL305-015D1W3	F305D1	
UEL305-100D1W3	F305D1	
UEL306D1W3	F306D1	1.8
UEL306-101D1W3	F306D1	
UEL306-102D1W3	F306D1	4.0
UEL306-103D1W3	F306D1	
UEL307D1W3	F307D1	2.2
UEL307-104D1W3	F307D1	
UEL307-105D1W3	F307D1	4.9
UEL307-106D1W3	F307D1	
UEL307-107D1W3	F307D1	
UEL308D1W3	F308D1	2.9
UEL308-108D1W3	F308D1	6.4
UEL308-109D1W3	F308D1	
UEL309D1W3	F309D1	3.6
UEL309-110D1W3	F309D1	
UEL309-111D1W3	F309D1	7.9
UEL309-112D1W3	F309D1	
UEL310D1W3	F310D1	4.6
UEL310-113D1W3	F310D1	
UEL310-114D1W3	F310D1	10
UEL310-115D1W3	F310D1	

Notes (1) These numbers indicate relubricatable type. If maintenance free type is needed, please oeder without suffix "D1".
(2) Inner race face does not protrude from the housing face except UELF305 and UELF316.
Remarks Please refer to page **A21** for size of grease fitting

Square flanged unit, cast housing
Eccentric locking collar type

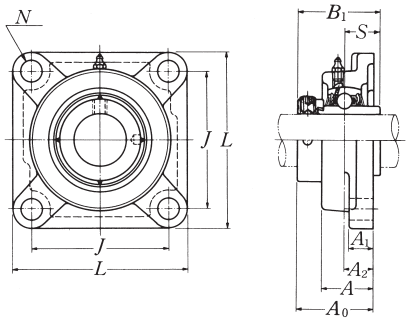

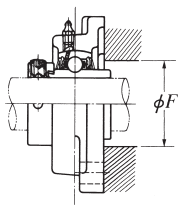

Shaft dia. mm inch	Unit number (1)(2)	Nominal dimensions mm inch L	J	A_2	A_1	A	N	A_0	B_1	S	F min.	Bolt size mm inch	Bearing number	Housing number	Mass of unit kg lb
55	**UELF311D1W3**	185	140	30	20	52	23	75.2	73	27.8	–	M20	UEL311D1W3	F311D1	5.6
2	**UELF311-200D1W3**												UEL311-200D1W3	F311D1	
2 1/16	**UELF311-201D1W3**	7 9/32	5 33/64	1 3/16	25/32	2 1/16	29/32	2 61/64	2.874	1.094	–	3/4	UEL311-201D1W3	F311D1	12
2 1/8	**UELF311-202D1W3**												UEL311-202D1W3	F311D1	
2 3/16	**UELF311-203D1W3**												UEL311-203D1W3	F311D1	
60	**UELF312D1W3**	195	150	33	22	56	23	81.45	79.4	30.95	–	M20	UEL312D1W3	F312D1	6.7
2 1/4	**UELF312-204D1W3**												UEL312-204D1W3	F312D1	
2 5/16	**UELF312-205D1W3**	7 11/16	5 29/32	1 19/64	7/8	2 7/32	29/32	3 13/64	3.126	1.219	–	3/4	UEL312-205D1W3	F312D1	15
2 3/8	**UELF312-206D1W3**												UEL312-206D1W3	F312D1	
2 7/16	**UELF312-207D1W3**												UEL312-207D1W3	F312D1	
65	**UELF313D1W3**	208	166	33	22	58	23	86.15	85.7	32.55	93	M20	UEL313D1W3	F313D1	8.4
2 1/2	**UELF313-208D1W3**	8 3/16	6 17/32	1 19/64	7/8	2 9/32	29/32	3 25/64	3.374	1.281	3.661	3/4	UEL313-208D1W3	F313D1	19
2 9/16	**UELF313-209D1W3**												UEL313-209D1W3	F313D1	
70	**UELF314D1W3**	226	178	36	25	61	25	93.95	92.1	34.15	–	M22	UEL314D1W3	F314D1	10
2 5/8	**UELF314-210D1W3**												UEL314-210D1W3	F314D1	
2 11/16	**UELF314-211D1W3**	8 29/32	6 1/64	1 27/64	31/32	2 13/32	63/64	3 45/64	3.626	1.344	–	7/8	UEL314-211D1W3	F314D1	22
2 3/4	**UELF314-212D1W3**												UEL314-212D1W3	F314D1	
75	**UELF315D1W3**	236	184	39	25	66	25	101.7	100	37.3	106	M22	UEL315D1W3	F315D1	12
2 13/16	**UELF315-213D1W3**												UEL315-213D1W3	F315D1	
2 7/8	**UELF315-214D1W3**	9 9/32	7 1/4	1 17/32	31/32	2 19/32	63/64	4	3.937	1.469	4.173	7/8	UEL315-214D1W3	F315D1	26
2 15/16	**UELF315-215D1W3**												UEL315-215D1W3	F315D1	
3	**UELF315-300D1W3**												UEL315-300D1W3	F315D1	
80	**UELF316D1W3**	250	196	38	27	68	31	103.9	106.4	40.5	112	M27	UEL316D1W3	F316D1	15
3 1/16	**UELF316-301D1W3**												UEL316-301D1W3	F316D1	
3 1/8	**UELF316-302D1W3**	9 27/32	7 23/32	1 1/2	1 1/16	2 11/16	1 7/32	4 3/32	4.189	1.594	4.409	1	UEL316-302D1W3	F316D1	33
3 3/16	**UELF316-303D1W3**												UEL316-303D1W3	F316D1	

Notes (1) These numbers indicate relubricatable type. If maintenance free type is needed, please oeder without suffix "D1".
(2) Inner race face does not protrude from the housing face except UELF305 and UELF316.
Remarks Please refer to page **A21** for size of grease fitting

Square flanged unit, cast housing
Eccentric locking collar type

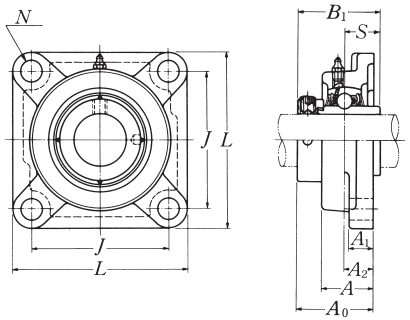

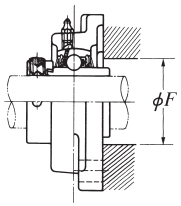

Shaft dia. mm / inch	Unit number (1)(2)	Nominal dimensions mm / inch L	J	A_2	A_1	A	N	A_0	B_1	S	F min.	Bolt size mm / inch
85	**UELF317D1W3**	260	204	44	27	74	31	111.45	109.5	42.05	119	M27
3 1/4	**UELF317-304D1W3**											
3 5/16	**UELF317-305D1W3**	10 1/4	8 1/32	1 47/64	1 1/16	2 29/32	1 7/32	4 25/64	4.311	1.656	4.685	1
3 7/16	**UELF317-307D1W3**											
90	**UELF318D1W3**	280	216	44	30	76	35	116.25	115.9	43.65	125	M30
3 7/16	**UELF318-307D1W3**	11 1/32	8 1/2	1 47/64	1 3/16	3	1 3/8	4 37/64	4.563	1.719	4.921	1 1/8
3 1/2	**UELF318-308D1W3**											
95	**UELF319D1W3**	290	228	59	30	94	35	142.4	122.3	38.9	–	M30
3 5/8	**UELF319-310D1W3**											
3 11/16	**UELF319-311D1W3**	11 13/32	8 31/32	2 21/64	1 3/16	3 11/16	1 3/8	5 39/64	4.815	1.531	–	1 1/8
3 3/4	**UELF319-312D1W3**											
100	**UELF320D1W3**	310	242	59	32	94	38	137.6	128.6	50	–	M33
3 13/16	**UELF320-313D1W3**											
3 7/8	**UELF320-314D1W3**	12 7/32	9 17/32	2 21/64	1 1/4	3 11/16	1 1/2	5 27/64	5.063	1.969	–	1 1/4
3 15/16	**UELF320-315D1W3**											
4	**UELF320-400D1W3**											
105	**UELF321D1W3**	310	242	59	32	94	38	150.3	139.7	48.4	–	M33
110	**UELF322D1W3**	340	266	60	35	96	41	152.1	141.3	49.2	–	M36

Bearing number	Housing number	Mass of unit kg / lb
UEL317D1W3	F317D1	16
UEL317-304D1W3	F317D1	
UEL317-305D1W3	F317D1	35
UEL317-307D1W3	F317D1	
UEL318D1W3	F318D1	20
UEL318-308D1W3	F318D1	44
UEL318-308D1W3	F318D1	
UEL319D1W3	F319D1	24
UEL319-310D1W3	F319D1	
UEL319-311D1W3	F319D1	53
UEL319-312D1W3	F319D1	
UEL320D1W3	F320D1	29
UEL320-313D1W3	F320D1	
UEL320-314D1W3	F320D1	64
UEL320-315D1W3	F320D1	
UEL320-400D1W3	F320D1	
UEL321D1W3	F321D1	28
UEL322D1W3	F322D1	37

Notes (1) These numbers indicate relubricatable type. If maintenance free type is needed, please oeder without suffix "D1".
(2) Inner race face does not protrude from the housing face except UELF305 and UELF316.
Remarks Please refer to page **A21** for size of grease fitting

Square flanged unit, cast housing
Eccentric locking collar type

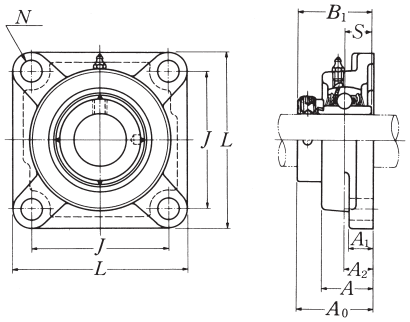

Shaft dia. mm / inch	Unit number (1)	Nominal dimensions (mm / inch) L	J	A_2	A_1	A	N	A_0	B_1	S	Bolt size mm / inch
20	UELFU204D1W3	86	63.5	19	15	29.5	11.5	45.6	43.7	17.1	M10
3/4	UELFU204-012D1W3	3 3/8	2 1/2	3/4	19/32	1 5/32	29/64	1 51/64	1.720	0.673	3/8
25	UELFU205D1W3	96	70	19	15	30	11.5	45.95	44.4	17.45	M10
13/16	UELFU205-013D1W3										
7/8	UELFU205-014D1W3	3 25/32	2 3/4	3/4	19/32	1 3/16	29/64	1 13/16	1.748	0.687	3/8
15/16	UELFU205-015D1W3										
1	UELFU205-100D1W3										
30	UELFU206D1W3	109	82.5	20	16	33	11.5	50.15	48.4	18.25	M10
1 1/16	UELFU206-101D1W3										
1 1/8	UELFU206-102D1W3	4 9/32	3 1/4	25/32	5/8	1 5/16	29/64	1 31/32	1.906	0.719	3/8
1 3/16	UELFU206-103D1W3										
1 1/4	UELFU206-104D1W3										
35	UELFU207D1W3	118	92	21	17	36	14	53.3	51.1	18.8	M12
1 1/4	UELFU207-104D1W3										
1 5/16	UELFU207-105D1W3	4 21/32	3 5/8	53/64	21/32	1 13/32	35/64	2 3/32	2.012	0.740	1/2
1 3/8	UELFU207-106D1W3										
1 7/16	UELFU207-107D1W3										
40	UELFU208D1W3	131	101.5	24	17	39	14	58.9	56.3	21.4	M12
1 1/2	UELFU208-108D1W3	5 5/32	4	15/16	21/32	1 17/32	35/64	2 5/16	2.217	0.843	1/2
1 9/16	UELFU208-109D1W3										
45	UELFU209D1W3	137	105	24	18	40	16	58.9	56.3	21.4	M14
1 5/8	UELFU209-110D1W3										
1 11/16	UELFU209-111D1W3	5 13/32	4 9/64	15/16	23/32	1 9/16	5/8	2 5/16	2.217	0.843	1/2
1 3/4	UELFU209-112D1W3										
50	UELFU210D1W3	144	111	28	20	46	18	66.1	62.7	24.6	M16
1 13/16	UELFU210-113D1W3										
1 7/8	UELFU210-114D1W3	5 21/32	4 3/8	1 7/64	25/32	1 13/16	45/64	2 39/64	2.469	0.969	5/8
1 15/16	UELFU210-115D1W3										
2	UELFU210-200D1W3										

Note (1) These numbers indicate relubricatable type. If maintenance free type is needed, please order without suffix "D1".
Remarks Please refer to page **A21** for size of grease fitting.

Bearing number	Housing number	Mass of unit kg / lb
UEL204D1W3	FU204D1	0.8
UEL204-012D1W3	FU204D1	1.8
UEL205D1W3	FU205D1	1.0
UEL205-013D1W3	FU205D1	
UEL205-014D1W3	FU205D1	2.2
UEL205-015D1W3	FU205D1	
UEL205-100D1W3	FU205D1	
UEL206D1W3	FU206D1	1.4
UEL206-101D1W3	FU206D1	
UEL206-102D1W3	FU206D1	3.1
UEL206-103D1W3	FU206D1	
UEL206-104D1W3	FU206D1	
UEL207D1W3	FU207D1	1.7
UEL207-104D1W3	FU207D1	
UEL207-105D1W3	FU207D1	3.7
UEL207-106D1W3	FU207D1	
UEL207-107D1W3	FU207D1	
UEL208D1W3	FU208D1	2.2
UEL208-108D1W3	FU208D1	4.9
UEL208-109D1W3	FU208D1	
UEL209D1W3	FU209D1	2.4
UEL209-110D1W3	FU209D1	
UEL209-111D1W3	FU209D1	5.3
UEL209-112D1W3	FU209D1	
UEL210D1W3	FU210D1	2.9
UEL210-113D1W3	FU210D1	
UEL210-114D1W3	FU210D1	6.4
UEL210-115D1W3	FU210D1	
UEL210-200D1W3	FU210D1	

Square flanged unit, cast housing
Eccentric locking collar type

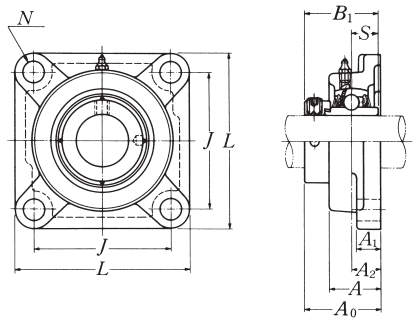

Shaft dia. mm / inch	Unit number (1)	Nominal dimensions mm / inch L	J	A_2	A_1	A	N	A_0	B_1	S	Bolt size mm / inch
55	UELFU211D1W3	163	130	31	21	49	18	74.65	71.4	27.75	M16
2	UELFU211-200D1W3										
2 1/16	UELFU211-201D1W3	6 13/32	5 1/8	1 7/32	13/16	1 15/16	45/64	2 15/16	2.811	1.093	5/8
2 1/8	UELFU211-202D1W3										
2 3/16	UELFU211-203D1W3										
60	UELFU212D1W3	175	143	34	21	53	18	80.85	77.8	30.95	M16
2 1/4	UELFU212-204D1W3										
2 5/16	UELFU212-205D1W3	6 7/8	5 5/8	1 11/32	13/16	2 3/32	45/64	3 3/16	3.063	1.219	5/8
2 3/8	UELFU212-206D1W3										
2 7/16	UELFU212-207D1W3										
65	UELFU213D1W3	187	149	38	22	59	20.5	89.55	85.7	34.15	M18
2 1/2	UELFU213-208D1W3	7 3/8	5 55/64	1 1/2	7/8	2 5/16	13/16	3 17/32	3.374	1.344	5/8
2 9/16	UELFU213-209D1W3										
70	UELFU214D1W3	193	152	38	22	62	20.5	89.55	85.7	34.15	M18
2 5/8	UELFU214-210D1W3										
2 11/16	UELFU214-211D1W3	7 19/32	5 63/64	1 1/2	7/8	2 7/16	13/16	3 17/32	3.374	1.344	5/8
2 3/4	UELFU214-212D1W3										
75	UELFU215D1W3	200	159	41	22	64	20.5	95.7	92	37.3	M18
2 13/16	UELFU215-213D1W3										
2 7/8	UELFU215-214D1W3	7 7/8	6 17/64	1 39/64	7/8	2 33/64	13/16	3 49/64	3.622	1.469	5/8
2 15/16	UELFU215-215D1W3										
3	UELFU215-300D1W3										

Note (1) These numbers indicate relubricatable type. If maintenance free type is needed, please order without suffix "D1".
Remarks Please refer to page **A21** for size of grease fitting.

Bearing number	Housing number	Mass of unit kg / lb
UEL211D1W3	FU211D1	3.9
UEL211-200D1W3	FU211D1	
UEL211-201D1W3	FU211D1	8.6
UEL211-202D1W3	FU211D1	
UEL211-203D1W3	FU211D1	
UEL212D1W3	FU212D1	4.7
UEL212-204D1W3	FU212D1	
UEL212-205D1W3	FU212D1	10
UEL212-206D1W3	FU212D1	
UEL212-207D1W3	FU212D1	
UEL213D1W3	FU213D1	6.3
UEL213-208D1W3	FU213D1	14
UEL213-209D1W3	FU213D1	
UEL214D1W3	FU214D1	6.7
UEL214-210D1W3	FU214D1	
UEL214-211D1W3	FU214D1	15
UEL214-212D1W3	FU214D1	
UEL215D1W3	FU215D1	7.0
UEL215-213D1W3	FU215D1	
UEL215-214D1W3	FU215D1	15
UEL215-215D1W3	FU215D1	
UEL215-300D1W3	FU215D1	

Square flanged unit, cast housing with spigot joint
Eccentric locking collar type

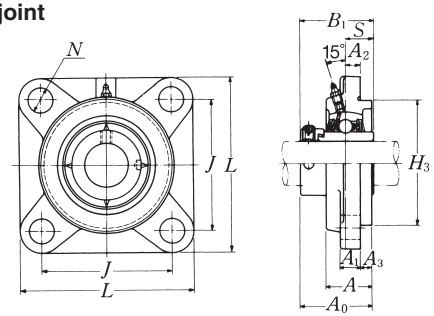

Shaft dia. mm / inch	Unit number (1)	Nominal dimensions mm inch L	J	A_2	N	A_3	A_1	A	H_3	A_0	B_1	S	Bolt size mm / inch
25	UELFS305D1W3	110	80	9	16	7	13	29	80	46.1	46.8	16.7	M14
13/16	UELFS305-013D1W3												
7/8	UELFS305-014D1W3	4 11/32	3 5/32	23/64	5/8	9/32	1/2	1 9/64	3.1496	1 13/16	1.843	0.657	1/2
15/16	UELFS305-015D1W3												
1	UELFS305-100D1W3												
30	UELFS306D1W3	125	95	10	16	8	15	32	90	50.5	50	17.5	M14
1 1/16	UELFS306-101D1W3												
1 1/8	UELFS306-102D1W3	4 29/32	3 47/64	25/64	5/8	5/16	19/32	1 17/64	3.5433	1 63/64	1.969	0.689	1/2
1 3/16	UELFS306-103D1W3												
35	UELFS307D1W3	135	100	11	19	9	16	36	100	53.3	51.6	18.3	M16
1 1/4	UELFS307-104D1W3												
1 5/16	UELFS307-105D1W3	5 5/16	3 15/16	7/16	3/4	23/64	5/8	1 13/32	3.9370	2 3/32	2.031	0.720	5/8
1 3/8	UELFS307-106D1W3												
1 7/16	UELFS307-107D1W3												
40	UELFS308D1W3	150	112	13	19	10	17	40	115	60.3	57.1	19.8	M16
1 1/2	UELFS308-108D1W3	5 29/32	4 13/32	33/64	3/4	25/64	21/32	1 9/16	4.5276	2 3/8	2.248	0.780	5/8
1 9/16	UELFS308-109D1W3												
45	UELFS309D1W3	160	125	14	19	11	18	44	125	63.9	58.7	19.8	M16
1 5/8	UELFS309-110D1W3												
1 11/16	UELFS309-111D1W3	6 5/16	4 59/64	35/64	3/4	7/16	23/32	1 47/64	4.9213	2 33/64	2.311	0.780	5/8
1 3/4	UELFS309-112D1W3												
50	UELFS310D1W3	175	132	16	23	12	19	48	140	70	66.6	24.6	M20
1 13/16	UELFS310-113D1W3												
1 7/8	UELFS310-114D1W3	6 7/8	5 13/64	5/8	29/32	15/32	3/4	1 57/64	5.5118	2 3/4	2.622	0.969	3/4
1 15/16	UELFS310-115D1W3												

Note (1) These numbers indicate relubricatable type. If maintenance free type is needed, please order without suffix "D1".
Remarks Please refer to page **A21** for size of grease fitting.

Bearing number	Housing number	Mass of unit kg / lb
UEL305D1W3	FS305D1	1.3
UEL305-013D1W3	FS305D1	
UEL305-014D1W3	FS305D1	2.9
UEL305-015D1W3	FS305D1	
UEL305-100D1W3	FS305D1	
UEL306D1W3	FS306D1	1.9
UEL306-101D1W3	FS306D1	
UEL306-102D1W3	FS306D1	4.2
UEL306-103D1W3	FS306D1	
UEL307D1W3	FS307D1	2.3
UEL307-104D1W3	FS307D1	
UEL307-105D1W3	FS307D1	5.1
UEL307-106D1W3	FS307D1	
UEL307-107D1W3	FS307D1	
UEL308D1W3	FS308D1	3.3
UEL308-108D1W3	FS308D1	7.3
UEL308-109D1W3	FS308D1	
UEL309D1W3	FS309D1	4.0
UEL309-110D1W3	FS309D1	
UEL309-111D1W3	FS309D1	8.8
UEL309-112D1W3	FS309D1	
UEL310D1W3	FS310D1	5.2
UEL310-113D1W3	FS310D1	
UEL310-114D1W3	FS310D1	11
UEL310-115D1W3	FS310D1	

Square flanged unit, cast housing with spigot joint
Eccentric locking collar type

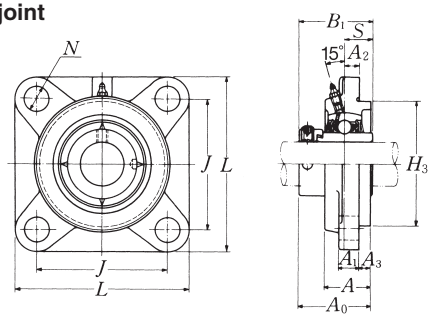

Shaft dia. mm / inch	Unit number (1)	Nominal dimensions mm / inch L	J	A_2	N	A_3	A_1	A	H_3	A_0	B_1	S	Bolt size mm / inch	Bearing number	Housing number	Mass of unit kg / lb
55	UELFS311D1W3	185	140	17	23	13	20	52	150	75.2	73	27.8	M20	UEL311D1W3	FS311D1	6.2
2	UELFS311-200D1W3													UEL311-200D1W3	FS311D1	
2 1/16	UELFS311-201D1W3	7 9/32	5 33/64	43/64	29/32	33/64	25/32	2 3/64	5.9055	2 61/64	2.874	1.094	3/4	UEL311-201D1W3	FS311D1	14
2 1/8	UELFS311-202D1W3													UEL311-202D1W3	FS311D1	
2 3/16	UELFS311-203D1W3													UEL311-203D1W3	FS311D1	
60	UELFS312D1W3	195	150	19	23	14	22	56	160	81.45	79.4	30.95	M20	UEL312D1W3	FS312D1	7.4
2 1/4	UELFS312-204D1W3													UEL312-204D1W3	FS312D1	
2 5/16	UELFS312-205D1W3	7 11/16	5 29/32	3/4	29/32	35/64	7/8	2 13/16	6.2992	3 13/64	3.126	1.219	3/4	UEL312-205D1W3	FS312D1	16
2 3/8	UELFS312-206D1W3													UEL312-206D1W3	FS312D1	
2 7/16	UELFS312-207D1W3													UEL312-207D1W3	FS312D1	
65	UELFS313D1W3	208	166	15	23	18	22	58	175	86.15	85.7	32.55	M20	UEL313D1W3	FS313D1	9.0
2 1/2	UELFS313-208D1W3	8 3/16	6 17/32	19/32	29/32	45/64	7/8	2 9/32	6.8898	3 25/64	3.374	1.281	3/4	UEL313-208D1W3	FS313D1	20
2 9/16	UELFS313-209D1W3													UEL313-209D1W3	FS313D1	
70	UELFS314D1W3	226	178	18	25	18	25	61	185	93.95	92.1	34.15	M22	UEL314D1W3	FS314D1	11
2 5/8	UELFS314-210D1W3													UEL314-210D1W3	FS314D1	
2 11/16	UELFS314-211D1W3	8 29/32	7 1/64	45/64	63/64	45/64	31/32	2 13/32	7.2835	3 45/64	3.626	1.344	7/8	UEL314-211D1W3	FS314D1	24
2 3/4	UELFS314-212D1W3													UEL314-212D1W3	FS314D1	
75	UELFS315D1W3	236	184	21	25	18	25	66	200	101.7	100	37.3	M22	UEL315D1W3	FS315D1	13
2 13/16	UELFS315-213D1W3													UEL315-213D1W3	FS315D1	
2 7/8	UELFS315-214D1W3	9 9/32	7 1/4	53/64	63/64	45/64	31/32	2 19/32	7.8740	4	3.937	1.469	7/8	UEL315-214D1W3	FS315D1	29
2 15/16	UELFS315-215D1W3													UEL315-215D1W3	FS315D1	
3	UELFS315-300D1W3													UEL315-300D1W3	FS315D1	
80	UELFS316D1W3	250	196	18	31	20	27	68	210	103.9	106.4	40.5	M27	UEL316D1W3	FS316D1	16
3 1/16	UELFS316-301D1W3													UEL316-301D1W3	FS316D1	
3 1/8	UELFS316-302D1W3	9 27/32	7 23/32	45/64	1 7/32	25/32	1 1/16	2 43/64	8.2677	4 3/32	4.189	1.594	1	UEL316-302D1W3	FS316D1	35
3 3/16	UELFS316-303D1W3													UEL316-303D1W3	FS316D1	

Note (1) These numbers indicate relubricatable type. If maintenance free type is needed, please order without suffix "D1".
Remarks Please refer to page **A21** for size of grease fitting.

Square flanged unit, cast housing with spigot joint
Eccentric locking collar type

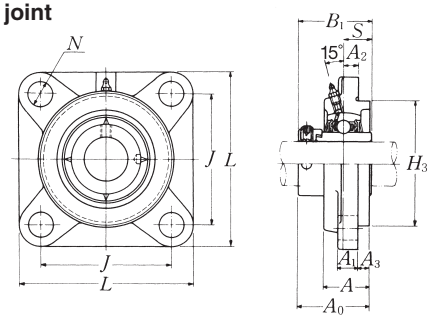

Shaft dia. mm / inch	Unit number (1)	Nominal dimensions mm inch L	J	A_2	N	A_3	A_1	A	H_3	A_0	B_1	S	Bolt size mm / inch
85	UELFS317D1W3	260	204	24	31	20	27	74	220	111.45	109.5	42.05	M27
3 1/4	UELFS317-304D1W3												
3 5/16	UELFS317-305D1W3	10 1/4	8 1/32	15/16	1 7/32	25/32	1 1/16	2 29/32	8.6614	4 25/64	4.311	1.656	1
3 7/16	UELFS317-307D1W3												
90	UELFS318D1W3	280	216	24	35	20	30	76	240	116.25	115.9	43.65	M30
3 7/16	UELFS318-307D1W3	11 1/32	8 1/2	15/16	1 3/8	25/32	1 3/16	2 63/64	9.4488	4 37/64	4.563	1.719	1 1/8
3 1/2	UELFS318-308D1W3												
95	UELFS319D1W3	290	228	39	35	20	30	94	250	142.4	122.3	38.9	M30
3 5/8	UELFS319-310D1W3												
3 11/16	UELFS319-311D1W3	11 13/32	8 31/32	1 17/32	1 3/8	25/32	1 3/16	3 45/64	9.8425	5 39/64	4.815	1.531	1 1/8
3 3/4	UELFS319-312D1W3												
100	UELFS320D1W3	310	242	39	38	20	32	94	260	137.6	128.6	50	M33
3 13/16	UELFS320-313D1W3												
3 7/8	UELFS320-314D1W3	12 7/32	9 17/32	1 17/32	1 1/2	25/32	1 1/4	3 45/64	10.2362	5 27/64	5.063	1.969	1 1/4
3 15/16	UELFS320-315D1W3												
4	UELFS320-400D1W3												
105	UELFS321D1W3	310	242	39	38	20	32	94	260	150.3	139.7	48.4	M33
110	UELFS322D1W3	340	266	35	41	25	35	96	300	152.1	141.3	49.2	M36

Note (1) These numbers indicate relubricatable type. If maintenance free type is needed, please order without suffix "D1".
Remarks Please refer to page **A21** for size of grease fitting.

Bearing number	Housing number	Mass of unit kg / lb
UEL317D1W3	FS317D1	18
UEL317-304D1W3	FS317D1	
UEL317-305D1W3	FS317D1	40
UEL317-307D1W3	FS317D1	
UEL318D1W3	FS318D1	22
UEL318-307D1W3	FS318D1	49
UEL318-308D1W3	FS318D1	
UEL319D1W3	FS319D1	26
UEL319-310D1W3	FS319D1	
UEL319-311D1W3	FS319D1	57
UEL319-312D1W3	FS319D1	
UEL320D1W3	FS320D1	31
UEL320-313D1W3	FS320D1	
UEL320-314D1W3	FS320D1	68
UEL320-315D1W3	FS320D1	
UEL320-400D1W3	FS320D1	
UEL321D1W3	FS321D1	31
UEL322D1W3	FS322D1	41

Round flanged unit, cast housing with spigot joint
Eccentric locking collar type

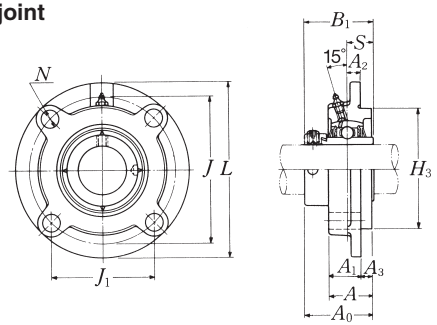

Shaft dia. mm / inch	Unit number (1)	Nominal dimensions mm / inch L	J	(J_1)	A_2	N	A_3	A_1	A	H_3	A_0	B_1	S	Bolt size mm / inch
20	UELFC204D1W3	100	78	55.2	10	12	5	20.5	25.5	62	41.6	43.7	17.1	M10
3/4	UELFC204-012D1W3	3 15/16	3 5/64	2 11/64	25/64	15/32	13/64	13/16	1	2.4409	1 41/64	1.720	0.673	3/8
25	UELFC205D1W3	115	90	63.6	10	12	6	21	27	70	42.95	44.4	17.45	M10
13/16	UELFC205-013D1W3													
7/8	UELFC205-014D1W3													
15/16	UELFC205-015D1W3	4 17/32	3 35/64	2 1/2	25/64	15/32	15/64	13/16	1 1/16	2.7559	1 11/16	1.748	0.687	3/8
1	UELFC205-100D1W3													
30	UELFC206D1W3	125	100	70.7	10	12	8	23	31	80	48.15	48.4	18.25	M10
1 1/16	UELFC206-101D1W3													
1 1/8	UELFC206-102D1W3													
1 3/16	UELFC206-103D1W3	4 29/32	3 15/16	2 25/32	25/64	15/32	5/16	29/32	1 7/32	3.1496	1 57/64	1.906	0.719	3/8
1 1/4	UELFC206-104D1W3													
35	UELFC207D1W3	135	110	77.8	11	14	8	26	34	90	51.3	51.1	18.8	M12
1 1/4	UELFC207-104D1W3													
1 5/16	UELFC207-105D1W3													
1 3/8	UELFC207-106D1W3	5 5/16	4 21/64	3 1/16	7/16	35/64	5/16	1 1/32	1 11/32	3.5433	2 1/64	2.012	0.740	7/16
1 7/16	UELFC207-107D1W3													
40	UELFC208D1W3	145	120	84.9	11	14	10	26	36	100	55.9	56.3	21.4	M12
1 1/2	UELFC208-108D1W3	5 23/32	4 23/32	3 11/32	7/16	35/64	25/64	1 1/32	1 27/64	3.9370	2 13/64	2.217	0.843	7/16
1 9/16	UELFC208-109D1W3													
45	UELFC209D1W3	160	132	93.3	10	16	12	26	38	105	56.9	56.3	21.4	M14
1 5/8	UELFC209-110D1W3													
1 11/16	UELFC209-111D1W3	6 5/16	5 13/64	3 43/64	25/64	5/8	15/32	1 1/32	1 1/2	4.1339	2 15/64	2.217	0.843	1/2
1 3/4	UELFC209-112D1W3													
50	UELFC210D1W3	165	138	97.6	10	16	12	28	40	110	60.1	62.7	24.6	M14
1 13/16	UELFC210-113D1W3													
1 7/8	UELFC210-114D1W3													
1 15/16	UELFC210-115D1W3	6 1/2	5 7/16	3 27/32	25/64	5/8	15/32	1 3/32	1 37/64	4.3307	2 23/64	2.469	0.969	1/2
2	UELFC210-200D1W3													

Bearing number	Housing number	Mass of unit kg / lb
UEL204D1W3	FC204D1	0.8
UEL204-012D1W3	FC204D1	1.8
UEL205D1W3	FC205D1	1.1
UEL205-013D1W3	FC205D1	
UEL205-014D1W3	FC205D1	
UEL205-015D1W3	FC205D1	2.4
UEL205-100D1W3	FC205D1	
UEL206D1W3	FC206D1	1.4
UEL206-101D1W3	FC206D1	
UEL206-102D1W3	FC206D1	
UEL206-103D1W3	FC206D1	3.1
UEL206-104D1W3	FC206D1	
UEL207D1W3	FC207D1	1.8
UEL207-104D1W3	FC207D1	
UEL207-105D1W3	FC207D1	4.0
UEL207-106D1W3	FC207D1	
UEL207-107D1W3	FC207D1	
UEL208D1W3	FC208D1	2.1
UEL208-108D1W3	FC208D1	4.6
UEL208-109D1W3	FC208D1	
UEL209D1W3	FC209D1	2.8
UEL209-110D1W3	FC209D1	
UEL209-111D1W3	FC209D1	6.2
UEL209-112D1W3	FC209D1	
UEL210D1W3	FC210D1	3.1
UEL210-113D1W3	FC210D1	
UEL210-114D1W3	FC210D1	6.8
UEL210-115D1W3	FC210D1	
UEL210-200D1W3	FC210D1	

Note (1) These numbers indicate relubricatable type. If maintenance free type is needed, please order without suffix "D1".
Remarks Please refer to page **A21** for size of grease fitting.

Round flanged unit, cast housing with spigot joint
Eccentric locking collar type

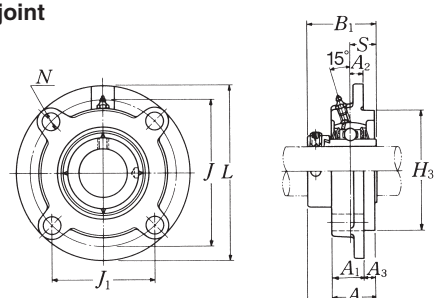

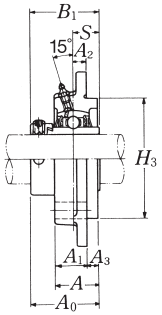

Shaft dia. mm / inch	Unit number (1)	Nominal dimensions mm / inch L	J	(J_1)	A_2	N	A_3	A_1	A	H_3	A_0	B_1	S	Bolt size mm / inch
55	UELFC211D1W3	185	150	106.1	13	19	12	31	43	125	68.65	71.4	27.75	M16
2	UELFC211-200D1W3													
2 1/16	UELFC211-201D1W3	7 9/32	5 29/32	4 11/64	33/64	3/4	15/32	1 7/32	1 11/16	4.9213	2 45/64	2.811	1.093	5/8
2 1/8	UELFC211-202D1W3													
2 3/16	UELFC211-203D1W3													
60	UELFC212D1W3	195	160	113.1	17	19	12	36	48	135	75.85	77.8	30.95	M16
2 1/4	UELFC212-204D1W3													
2 5/16	UELFC212-205D1W3	7 11/16	6 19/64	4 29/64	43/64	3/4	15/32	1 13/32	1 57/64	5.3150	2 63/64	3.063	1.219	5/8
2 3/8	UELFC212-206D1W3													
2 7/16	UELFC212-207D1W3													
65	UELFC213D1W3	205	170	120.2	16	19	14	36	50	145	81.55	85.7	34.15	M16
2 1/2	UELFC213-208D1W3	8 1/16	6 11/16	4 47/64	5/8	3/4	35/64	1 13/32	1 31/32	5.7087	3 13/64	3.374	1.344	5/8
2 9/16	UELFC213-209D1W3													
70	UELFC214D1W3	215	177	125.2	17	19	14	40	54	150	82.55	85.7	34.15	M16
2 5/8	UELFC214-210D1W3													
2 11/16	UELFC214-211D1W3	8 15/32	6 31/32	4 59/64	43/64	3/4	35/64	1 37/64	2 1/8	5.9055	3 1/4	3.374	1.344	5/8
2 3/4	UELFC214-212D1W3													
75	UELFC215D1W3	220	184	130.1	18	19	16	40	56	160	88.7	92	37.3	M16
2 13/16	UELFC215-213D1W3													
2 7/8	UELFC215-214D1W3	8 21/32	7 1/4	5 1/8	45/64	3/4	5/8	1 37/64	2 13/64	6.2992	3 31/64	3.622	1.469	5/8
2 15/16	UELFC215-215D1W3													
3	UELFC215-300D1W3													

Note (1) These numbers indicate relubricatable type. If maintenance free type is needed, please order without suffix "D1".
Remarks Please refer to page **A21** for size of grease fitting.

Bearing number	Housing number	Mass of unit kg / lb
UEL211D1W3	FC211D1	4.3
UEL211-200D1W3	FC211D1	
UEL211-201D1W3	FC211D1	9.5
UEL211-202D1W3	FC211D1	
UEL211-203D1W3	FC211D1	
UEL212D1W3	FC212D1	5.2
UEL212-204D1W3	FC212D1	
UEL212-205D1W3	FC212D1	11
UEL212-206D1W3	FC212D1	
UEL212-207D1W3	FC212D1	
UEL213D1W3	FC213D1	6.5
UEL213-208D1W3	FC213D1	14
UEL213-209D1W3	FC213D1	
UEL214D1W3	FC214D1	7.4
UEL214-210D1W3	FC214D1	
UEL214-211D1W3	FC214D1	16
UEL214-212D1W3	FC214D1	
UEL215D1W3	FC215D1	7.8
UEL215-213D1W3	FC215D1	
UEL215-214D1W3	FC215D1	17
UEL215-215D1W3	FC215D1	
UEL215-300D1W3	FC215D1	

Rhombus flanged unit, cast housing
Eccentric locking collar type

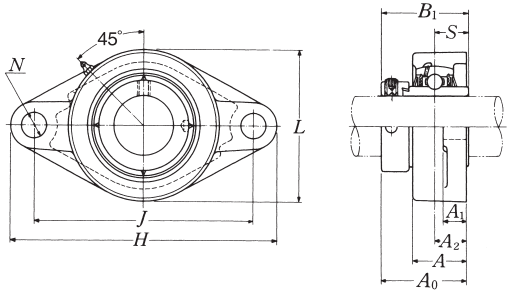

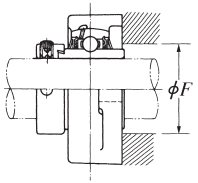

Shaft dia. mm inch	Unit number (1)	Nominal dimensions mm inch H	J	A_2	A_1	A	N	L	A_0	B_1	S	F min.	Bolt size mm inch
20	UELFL204D1W3	113	90	15	11	25.5	12	60	41.6	43.7	17.1	34	M10
3/4	UELFL204-012D1W3	4 7/16	3 35/64	19/32	7/16	1	15/32	2 3/8	1 41/64	1.720	0.673	1.339	3/8
25	UELFL205D1W3	130	99	16	13	27	16	68	42.95	44.4	17.45	38	M14
13/16	UELFL205-013D1W3												
7/8	UELFL205-014D1W3	5 1/8	3 57/64	5/8	1/2	1 1/16	5/8	2 11/16	1 11/16	1.748	0.687	1.496	1/2
15/16	UELFL205-015D1W3												
1	UELFL205-100D1W3												
30	UELFL206D1W3	148	117	18	13	31	16	80	48.15	48.4	18.25	45	M14
1 1/16	UELFL206-101D1W3												
1 1/8	UELFL206-102D1W3	5 13/16	4 39/64	45/64	1/2	1 7/32	5/8	3 5/32	1 57/64	1.906	0.719	1.772	1/2
1 3/16	UELFL206-103D1W3												
1 1/4	UELFL206-104D1W3												
35	UELFL207D1W3	161	130	19	15	34	16	90	51.3	51.1	18.8	51	M14
1 1/4	UELFL207-104D1W3												
1 5/16	UELFL207-105D1W3	6 11/32	5 1/8	3/4	19/32	1 11/32	5/8	3 17/32	2 1/64	2.012	0.740	2.008	1/2
1 3/8	UELFL207-106D1W3												
1 7/16	UELFL207-107D1W3												
40	UELFL208D1W3	175	144	21	15	36	16	100	55.9	56.3	21.4	57	M14
1 1/2	UELFL208-108D1W3	6 7/8	5 43/64	53/64	19/32	1 13/32	5/8	3 15/16	2 13/64	2.217	0.843	2.244	1/2
1 9/16	UELFL208-109D1W3												
45	UELFL209D1W3	188	148	22	16	38	19	108	56.9	56.3	21.4	62	M16
1 5/8	UELFL209-110D1W3												
1 11/16	UELFL209-111D1W3	7 13/32	5 53/64	55/64	5/8	1 1/2	3/4	4 1/4	2 15/64	2.217	0.843	2.441	5/8
1 3/4	UELFL209-112D1W3												
50	UELFL210D1W3	197	157	22	16	40	19	115	60.1	62.7	24.6	67	M16
1 13/16	UELFL210-113D1W3												
1 7/8	UELFL210-114D1W3	7 3/4	6 3/16	55/64	5/8	1 9/16	3/4	4 17/32	2 23/64	2.469	0.969	2.638	5/8
1 15/16	UELFL210-115D1W3												
2	UELFL210-200D1W3												

Bearing number	Housing number	Mass of unit kg lb
UEL204D1W3	FL204D1	0.5
UEL204-012D1W3	FL204D1	1.1
UEL205D1W3	FL205D1	0.7
UEL205-013D1W3	FL205D1	
UEL205-014D1W3	FL205D1	1.5
UEL205-015D1W3	FL205D1	
UEL205-100D1W3	FL205D1	
UEL206D1W3	FL206D1	1.0
UEL206-101D1W3	FL206D1	
UEL206-102D1W3	FL206D1	2.2
UEL206-103D1W3	FL206D1	
UEL206-104D1W3	FL206D1	
UEL207D1W3	FL207D1	1.3
UEL207-104D1W3	FL207D1	
UEL207-105D1W3	FL207D1	2.9
UEL207-106D1W3	FL207D1	
UEL207-107D1W3	FL207D1	
UEL208D1W3	FL208D1	1.6
UEL208-108D1W3	FL208D1	3.5
UEL208-109D1W3	FL208D1	
UEL209D1W3	FL209D1	2.0
UEL209-110D1W3	FL209D1	
UEL209-111D1W3	FL209D1	4.4
UEL209-112D1W3	FL209D1	
UEL210D1W3	FL210D1	2.2
UEL210-113D1W3	FL210D1	
UEL210-114D1W3	FL210D1	4.9
UEL210-115D1W3	FL210D1	
UEL210-200D1W3	FL210D1	

Note (1) These numbers indicate relubricatable type. If maintenance free type is needed, please order without suffix "D1".
Remarks Please refer to page **A21** for size of grease fitting.

Rhombus flanged unit, cast housing
Eccentric locking collar type

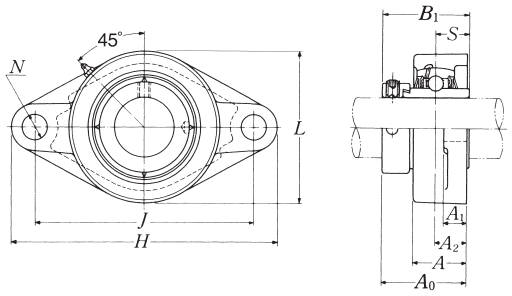

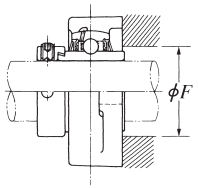

Shaft dia. mm / inch	Unit number (1)	Nominal dimensions mm inch H	J	A_2	A_1	A	N	L	A_0	B_1	S	F min.	Bolt size mm / inch
55	UELFL211D1W3	224	184	25	18	43	19	130	68.65	71.4	27.75	73	M16
2	UELFL211-200D1W3												
2 1/16	UELFL211-201D1W3	8 13/16	7 1/4	63/64	23/32	1 11/16	3/4	5 1/8	2 45/64	2.811	1.093	2.874	5/8
2 1/8	UELFL211-202D1W3												
2 3/16	UELFL211-203D1W3												
60	UELFL212D1W3	250	202	29	18	48	23	140	75.85	77.8	30.95	81	M20
2 1/4	UELFL212-204D1W3												
2 5/16	UELFL212-205D1W3	9 27/32	7 61/64	1 9/64	23/32	1 7/8	29/32	5 1/2	2 63/64	3.063	1.219	3.189	3/4
2 3/8	UELFL212-206D1W3												
2 7/16	UELFL212-207D1W3												
65	UELFL213D1W3	258	210	30	22	50	23	155	81.55	85.7	34.15	87	M20
2 1/2	UELFL213-208D1W3	10 5/32	8 17/64	1 3/16	7/8	1 31/32	29/32	6 3/32	3 13/64	3.374	1.344	3.425	3/4
2 9/16	UELFL213-209D1W3												
70	UELFL214D1W3	265	216	31	22	54	23	160	82.55	85.7	34.15	91	M20
2 5/8	UELFL214-210D1W3												
2 11/16	UELFL214-211D1W3	10 7/16	8 1/2	1 7/32	7/8	2 1/8	29/32	6 5/16	3 1/4	3.374	1.344	3.583	3/4
2 3/4	UELFL214-212D1W3												
75	UELFL215D1W3	275	225	34	22	56	23	165	88.7	92	37.3	97	M20
2 13/16	UELFL215-213D1W3												
2 7/8	UELFL215-214D1W3	10 13/16	8 55/64	1 11/32	7/8	2 7/32	29/32	6 1/2	3 31/64	3.622	1.469	3.819	3/4
2 15/16	UELFL215-215D1W3												
3	UELFL215-300D1W3												

Note (1) These numbers indicate relubricatable type. If maintenance free type is needed, please order without suffix "D1".
Remarks Please refer to page **A21** for size of grease fitting.

Bearing number	Housing number	Mass of unit kg / lb
UEL211D1W3	FL211D1	3.2
UEL211-200D1W3	FL211D1	
UEL211-201D1W3	FL211D1	7.1
UEL211-202D1W3	FL211D1	
UEL211-203D1W3	FL211D1	
UEL212D1W3	FL212D1	4.1
UEL212-204D1W3	FL212D1	
UEL212-205D1W3	FL212D1	9.0
UEL212-206D1W3	FL212D1	
UEL212-207D1W3	FL212D1	
UEL213D1W3	FL213D1	5.5
UEL213-208D1W3	FL213D1	12
UEL213-209D1W3	FL213D1	
UEL214D1W3	FL214D1	5.8
UEL214-210D1W3	FL214D1	
UEL214-211D1W3	FL214D1	13
UEL214-212D1W3	FL214D1	
UEL215D1W3	FL215D1	6.3
UEL215-213D1W3	FL215D1	
UEL215-214D1W3	FL215D1	14
UEL215-215D1W3	FL215D1	
UEL215-300D1W3	FL215D1	

Rhombus flanged unit, cast housing
Eccentric locking collar type

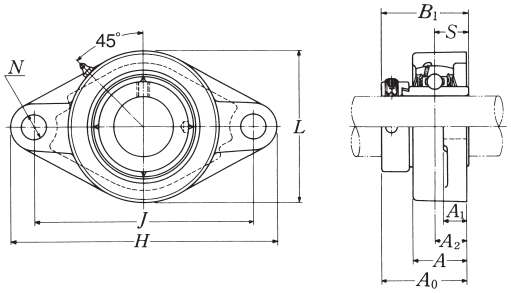

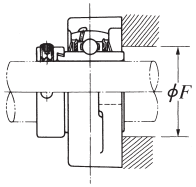

Shaft dia. mm inch	Unit number (1)(2)	Nominal dimensions mm inch H	J	A_2	A_1	A	N	L	A_0	B_1	S	F min.	Bolt size mm inch
25	UELFL305D1W3	150	113	16	13	29	19	80	46.1	46.8	16.7	41	M16
13/16	UELFL305-013D1W3												
7/8	UELFL305-014D1W3	5 29/32	4 29/64	5/8	1/2	1 5/32	3/4	3 5/32	1 13/16	1.843	0.657	1.614	5/8
15/16	UELFL305-015D1W3												
1	UELFL305-100D1W3												
30	UELFL306D1W3	180	134	18	15	32	23	90	50.5	50	17.5	49	M20
1 1/16	UELFL306-101D1W3												
1 1/8	UELFL306-102D1W3	7 3/32	5 9/32	45/64	19/32	1 1/4	29/32	3 17/32	1 63/64	1.969	0.689	1.929	3/4
1 3/16	UELFL306-103D1W3												
35	UELFL307D1W3	185	141	20	16	36	23	100	53.3	51.6	18.3	–	M20
1 1/4	UELFL307-104D1W3												
1 5/16	UELFL307-105D1W3	7 9/32	5 35/64	25/32	5/8	1 13/32	29/32	3 15/16	2 3/32	2.031	0.720	–	3/4
1 3/8	UELFL307-106D1W3												
1 7/16	UELFL307-107D1W3												
40	UELFL308D1W3	200	158	23	17	40	23	112	60.3	57.1	19.8	–	M20
1 1/2	UELFL308-108D1W3	7 7/8	6 7/32	29/32	21/32	1 9/16	29/32	4 13/32	2 3/8	2.248	0.780	–	3/4
1 9/16	UELFL308-109D1W3												
45	UELFL309D1W3	230	177	25	18	44	25	125	63.9	58.7	19.8	–	M22
1 5/8	UELFL309-110D1W3												
1 11/16	UELFL309-111D1W3	9 1/16	6 31/32	63/64	23/32	1 23/32	63/64	4 29/32	2 33/64	2.311	0.780	–	7/8
1 3/4	UELFL309-112D1W3												
50	UELFL310D1W3	240	187	28	19	48	25	140	70	66.6	24.6	–	M22
1 13/16	UELFL310-113D1W3												
1 7/8	UELFL310-114D1W3	9 7/16	7 23/64	1 7/64	3/4	1 7/8	63/64	5 1/2	2 3/4	2.622	0.969	–	7/8
1 15/16	UELFL310-115D1W3												

Bearing number	Housing number	Mass of unit kg lb
UEL305D1W3	FL305D1	1.0
UEL305-013D1W3	FL305D1	
UEL305-014D1W3	FL305D1	2.2
UEL305-015D1W3	FL305D1	
UEL305-100D1W3	FL305D1	
UEL306D1W3	FL306D1	1.6
UEL306-101D1W3	FL306D1	
UEL306-102D1W3	FL306D1	3.5
UEL306-103D1W3	FL306D1	
UEL307D1W3	FL307D1	1.8
UEL307-104D1W3	FL307D1	
UEL307-105D1W3	FL307D1	4.0
UEL307-106D1W3	FL307D1	
UEL307-107D1W3	FL307D1	
UEL308D1W3	FL308D1	2.3
UEL308-108D1W3	FL308D1	5.1
UEL308-109D1W3	FL308D1	
UEL309D1W3	FL309D1	3.1
UEL309-110D1W3	FL309D1	
UEL309-111D1W3	FL309D1	6.8
UEL309-112D1W3	FL309D1	
UEL310D1W3	FL310D1	4.2
UEL310-113D1W3	FL310D1	
UEL310-114D1W3	FL310D1	9.3
UEL310-115D1W3	FL310D1	

Notes (1) These numbers indicate relubricatable type. If maintenance free type is needed, please order without suffix "D1".
(2) Inner race face does not protrude from the housing face except UELFL305 and UELFL316.
Remarks Please refer to page **A21** for size of grease fitting.

Rhombus flanged unit, cast housing
Eccentric locking collar type

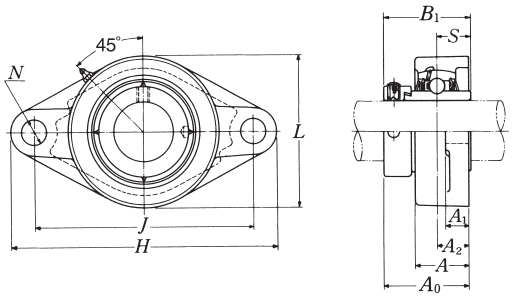

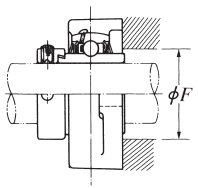

Shaft dia. mm inch	Unit number (1)(2)	Nominal dimensions mm inch H	J	A_2	A_1	A	N	L	A_0	B_1	S	F min.	Bolt size mm inch
55	UELFL311D1W3	250	198	30	20	52	25	150	75.2	73	27.8	–	M22
2	UELFL311-200D1W3												
2 1/16	UELFL311-201D1W3	9 27/32	7 51/64	1 3/16	25/32	2 1/16	63/64	5 29/32	2 61/64	2.874	1.094	–	7/8
2 1/8	UELFL311-202D1W3												
2 3/16	UELFL311-203D1W3												
60	UELFL312D1W3	270	212	33	22	56	31	160	81.45	79.4	30.95	–	M27
2 1/4	UELFL312-204D1W3												
2 5/16	UELFL312-205D1W3	10 5/8	8 11/32	1 19/64	7/8	2 7/32	1 7/32	6 5/16	3 13/64	3.126	1.219	–	1
2 3/8	UELFL312-206D1W3												
2 7/16	UELFL312-207D1W3												
65	UELFL313D1W3	295	240	33	25	58	31	175	86.15	85.7	32.55	93	M27
2 1/2	UELFL313-208D1W3	11 5/8	9 29/64	1 19/64	31/32	2 9/32	1 7/32	6 7/8	3 25/64	3.374	1.281	3.661	1
2 9/16	UELFL313-209D1W3												
70	UELFL314D1W3	315	250	36	28	61	35	185	93.95	92.1	34.15	–	M30
2 5/8	UELFL314-210D1W3												
2 11/16	UELFL314-211D1W3	12 13/32	9 27/32	1 27/64	1 3/32	2 13/32	1 3/8	7 9/32	3 45/64	3.626	1.344	–	1 1/8
2 3/4	UELFL314-212D1W3												
75	UELFL315D1W3	320	260	39	30	66	35	195	101.7	100	37.3	106	M30
2 13/16	UELFL315-213D1W3												
2 7/8	UELFL315-214D1W3	12 19/32	10 15/64	1 17/32	1 3/16	2 19/32	1 3/8	7 11/16	4	3.937	1.469	4.173	1 1/8
2 15/16	UELFL315-215D1W3												
3	UELFL315-300D1W3												
80	UELFL316D1W3	355	285	38	32	68	38	210	103.9	106.4	40.5	112	M33
3 1/16	UELFL316-301D1W3												
3 1/8	UELFL316-302D1W3	13 31/32	11 7/32	1 1/2	1 1/4	2 11/16	1 1/2	8 9/32	4 3/32	4.189	1.594	4.409	1 1/4
3 3/16	UELFL316-303D1W3												

Bearing number	Housing number	Mass of unit kg lb
UEL311D1W3	FL311D1	4.9
UEL311-200D1W3	FL311D1	
UEL311-201D1W3	FL311D1	11
UEL311-202D1W3	FL311D1	
UEL311-203D1W3	FL311D1	
UEL312D1W3	FL312D1	6.1
UEL312-204D1W3	FL312D1	
UEL312-205D1W3	FL312D1	13
UEL312-206D1W3	FL312D1	
UEL312-207D1W3	FL312D1	
UEL313D1W3	FL313D1	8.0
UEL313-208D1W3	FL313D1	18
UEL313-209D1W3	FL313D1	
UEL314D1W3	FL314D1	9.2
UEL314-210D1W3	FL314D1	
UEL314-211D1W3	FL314D1	20
UEL314-212D1W3	FL314D1	
UEL315D1W3	FL315D1	10
UEL315-213D1W3	FL315D1	
UEL315-214D1W3	FL315D1	22
UEL315-215D1W3	FL315D1	
UEL315-300D1W3	FL315D1	
UEL316D1W3	FL316D1	14
UEL316-301D1W3	FL316D1	
UEL316-302D1W3	FL316D1	31
UEL316-303D1W3	FL316D1	

Notes (1) These numbers indicate relubricatable type. If maintenance free type is needed, please order without suffix "D1".
(2) Inner race face does not protrude from the housing face except UELFL305 and UELFL316.
Remarks Please refer to page **A21** for size of grease fitting.

Rhombus flanged unit, cast housing
Eccentric locking collar type

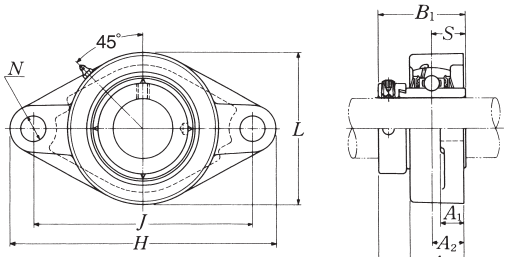

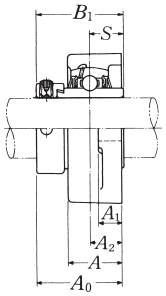

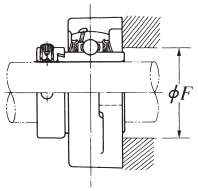

Shaft dia. mm inch	Unit number (1)(2)	Nominal dimensions mm inch H	J	A_2	A_1	A	N	L	A_0	B_1	S	F min.	Bolt size mm inch
85	UELFL317D1W3	370	300	44	32	74	38	220	111.45	109.5	42.05	119	M33
3 1/4	UELFL317-304D1W3												
3 5/16	UELFL317-305D1W3	14 9/16	11 13/16	1 47/64	1 1/4	2 29/32	1 1/2	8 21/32	4 25/64	4.311	1.656	4.685	1 1/4
3 7/16	UELFL317-306D1W3												
90	UELFL318D1W3	385	315	44	36	76	38	235	116.25	115.9	43.65	125	M33
3 7/16	UELFL318-307D1W3	15 5/32	12 13/32	1 47/64	1 13/32	3	1 1/2	9 1/4	4 37/64	4.563	1.719	4.921	1 1/4
3 1/2	UELFL318-308D1W3												
95	UELFL319D1W3	405	330	59	40	94	41	250	142.4	122.3	38.9	–	M36
3 5/8	UELFL319-310D1W3												
3 11/16	UELFL319-311D1W3	15 15/16	12 63/64	2 21/64	1 9/16	3 11/16	1 39/64	9 27/32	5 39/64	4.815	1.531	–	1 3/8
3 3/4	UELFL319-312D1W3												
100	UELFL320D1W3	440	360	59	40	94	44	270	137.6	128.6	50	–	M39
3 13/16	UELFL320-313D1W3												
3 7/8	UELFL320-314D1W3	17 5/16	14 11/64	2 21/64	1 9/16	3 11/16	1 47/64	10 5/8	5 27/64	5.063	1.969	–	1 1/2
3 15/16	UELFL320-315D1W3												
4	UELFL320-400D1W3												
105	UELFL321D1W3	440	360	59	40	94	44	270	150.3	139.7	48.4	–	M39
110	UELFL322D1W3	470	390	60	42	96	44	300	152.1	141.3	49.2	–	M39

Bearing number	Housing number	Mass of unit kg lb
UEL317D1W3	FL317D1	16
UEL317-304D1W3	FL317D1	
UEL317-305D1W3	FL317D1	35
UEL317-306D1W3	FL317D1	
UEL318D1W3	FL318D1	19
UEL318-307D1W3	FL318D1	42
UEL318-308D1W3	FL318D1	
UEL319D1W3	FL319D1	24
UEL319-310D1W3	FL319D1	
UEL319-311D1W3	FL319D1	53
UEL319-312D1W3	FL319D1	
UEL320D1W3	FL320D1	28
UEL320-313D1W3	FL320D1	
UEL320-314D1W3	FL320D1	62
UEL320-315D1W3	FL320D1	
UEL320-400D1W3	FL320D1	
UEL321D1W3	FL321D1	30
UEL322D1W3	FL322D1	36

Notes (1) These numbers indicate relubricatable type. If maintenance free type is needed, please order without suffix "D1".
(2) Inner race face does not protrude from the housing face except UELFL305 and UELFL316.
Remarks Please refer to page **A21** for size of grease fitting.

Rhombus flanged unit, cast housing
Eccentric locking collar type

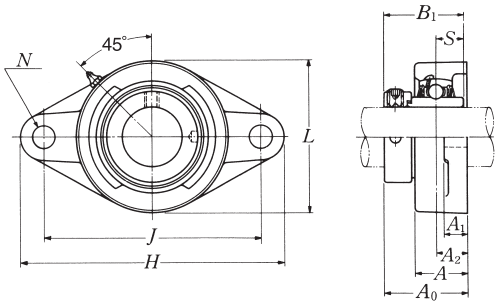

Shaft dia. mm / inch	Unit number (1)	Nominal dimensions mm / inch H	J	A_2	A_1	A	N	L	A_0	B_1	S	Bolt size mm / inch
20	**UELFLU204D1W3**	113	90	19	15	29.5	11.5	61	45.6	43.7	17.1	M10
3/4	**UELFLU204-012D1W3**	4 7/16	3 35/64	3/4	19/32	1 5/32	29/64	2 13/32	1 51/64	1.720	0.673	5/16
25	**UELFLU205D1W3**	125	99	19	15	30	11.5	70	45.95	44.4	17.45	M10
13/16	**UELFLU205-013D1W3**											
7/8	**UELFLU205-014D1W3**	4 29/32	3 57/64	3/4	19/32	1 3/16	29/64	2 3/4	1 13/16	1.748	0.687	3/8
15/16	**UELFLU205-015D1W3**											
1	**UELFLU205-100D1W3**											
30	**UELFLU206D1W3**	142	116.5	20	16	33	11.5	83	50.15	48.4	18.25	M10
1 1/16	**UELFLU206-101D1W3**											
1 1/8	**UELFLU206-102D1W3**	5 19/32	4 19/32	25/32	5/8	1 5/16	29/64	3 9/32	1 31/32	1.906	0.719	3/8
1 3/16	**UELFLU206-103D1W3**											
1 1/4	**UELFLU206-104D1W3**											
35	**UELFLU207D1W3**	156	130	21	17	36	14	96	53.3	51.1	18.8	M12
1 1/4	**UELFLU207-104D1W3**											
1 5/16	**UELFLU207-105D1W3**	6 5/32	5 1/8	53/64	21/32	1 13/32	35/64	3 25/32	2 3/32	2.012	0.740	1/2
1 3/8	**UELFLU207-106D1W3**											
1 7/16	**UELFLU207-107D1W3**											
40	**UELFLU208D1W3**	172	143.5	24	17	39	14	105	58.9	56.3	21.4	M12
1 1/2	**UELFLU208-108D1W3**	6 25/32	5 21/32	15/16	21/32	1 17/32	35/64	4 1/8	2 5/16	2.217	0.843	1/2
1 9/16	**UELFLU208-109D1W3**											
45	**UELFLU209D1W3**	180	148.5	24	18	40	16	111	58.9	56.3	21.4	M14
1 5/8	**UELFLU209-110D1W3**											
1 11/16	**UELFLU209-111D1W3**	7 3/32	5 27/32	15/16	23/32	1 9/16	5/8	4 3/8	2 5/16	2.217	0.843	1/2
1 3/4	**UELFLU209-112D1W3**											
50	**UELFLU210D1W3**	190	157	28	20	46	18	116	66.1	62.7	24.6	M16
1 13/16	**UELFLU210-113D1W3**											
1 7/8	**UELFLU210-114D1W3**	7 15/32	6 3/16	1 7/64	25/32	1 13/16	45/64	4 9/16	2 39/64	2.469	0.969	5/8
1 15/16	**UELFLU210-115D1W3**											
2	**UELFLU210-200D1W3**											

Note (1) These numbers indicate relubricatable type. If maintenance free type is needed, please order without suffix "D1".
Remarks Please refer to page **A21** for size of grease fitting.

Bearing number	Housing number	Mass of unit kg / lb
UEL204D1W3	FLU204D1	0.6
UEL204-012D1W3	FLU204D1	1.3
UEL205D1W3	FLU205D1	0.7
UEL205-013D1W3	FLU205D1	
UEL205-014D1W3	FLU205D1	1.5
UEL205-015D1W3	FLU205D1	
UEL205-100D1W3	FLU205D1	
UEL206D1W3	FLU206D1	1.1
UEL206-101D1W3	FLU206D1	
UEL206-102D1W3	FLU206D1	2.4
UEL206-103D1W3	FLU206D1	
UEL206-104D1W3	FLU206D1	
UEL207D1W3	FLU207D1	1.5
UEL207-104D1W3	FLU207D1	
UEL207-105D1W3	FLU207D1	3.3
UEL207-106D1W3	FLU207D1	
UEL207-107D1W3	FLU207D1	
UEL208D1W3	FLU208D1	1.9
UEL208-108D1W3	FLU208D1	4.2
UEL208-109D1W3	FLU208D1	
UEL209D1W3	FLU209D1	2.3
UEL209-110D1W3	FLU209D1	
UEL209-111D1W3	FLU209D1	5.1
UEL209-112D1W3	FLU209D1	
UEL210D1W3	FLU210D1	2.9
UEL210-113D1W3	FLU210D1	
UEL210-114D1W3	FLU210D1	6.4
UEL210-115D1W3	FLU210D1	
UEL210-200D1W3	FLU210D1	

Rhombus flanged unit, cast housing
Eccentric locking collar type

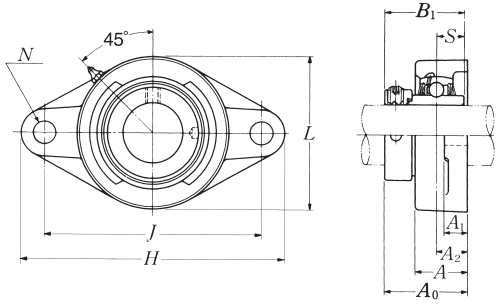

Shaft dia. mm / inch	Unit number (1)	Nominal dimensions mm / inch H	J	A_2	A_1	A	N	L	A_0	B_1	S	Bolt size mm / inch
55	**UELFLU211D1W3**	217	184	31	21	49	18	134	74.65	71.4	27.75	M16
2	**UELFLU211-200D1W3**											
2 1/16	**UELFLU211-201D1W3**	8 17/32	7 1/4	1 7/32	13/16	1 15/16	45/64	5 9/32	2 15/16	2.811	1.093	5/8
2 1/8	**UELFLU211-202D1W3**											
2 3/16	**UELFLU211-203D1W3**											
60	**UELFLU212D1W3**	235	202	34	21	53	18	138	80.85	77.8	30.95	M16
2 1/4	**UELFLU212-204D1W3**											
2 5/16	**UELFLU212-205D1W3**	9 1/4	7 61/64	1 11/32	13/16	2 3/32	45/64	5 7/16	3 3/16	3.063	1.219	5/8
2 3/8	**UELFLU212-206D1W3**											
2 7/16	**UELFLU212-207D1W3**											
65	**UELFLU213D1W3**	248	210	38	22	59	20.5	152	89.55	85.7	34.15	M18
2 1/2	**UELFLU213-208D1W3**	9 3/4	8 17/64	1 1/2	7/8	2 5/16	13/16	5 31/32	3 17/32	3.374	1.344	5/8
2 9/16	**UELFLU213-209D1W3**											
70	**UELFLU214D1W3**	257	216	38	22	62	20.5	159	89.55	85.7	34.15	M18
2 5/8	**UELFLU214-210D1W3**											
2 11/16	**UELFLU214-211D1W3**	10 1/8	8 1/2	1 1/2	7/8	2 7/16	13/16	6 1/4	3 17/32	3.374	1.344	5/8
2 3/4	**UELFLU214-212D1W3**											
75	**UELFLU215D1W3**	266	225	41	22	65	20.5	165	95.7	92	37.3	M18
2 13/16	**UELFLU215-213D1W3**											
2 7/8	**UELFLU215-214D1W3**	10 15/32	8 55/64	1 39/64	7/8	2 9/16	13/16	6 1/2	3 49/64	3.622	1.469	5/8
2 15/16	**UELFLU215-215D1W3**											
3	**UELFLU215-300D1W3**											

Note (1) These numbers indicate relubricatable type. If maintenance free type is needed, please order without suffix "D1".
Remarks Please refer to page **A21** for size of grease fitting.

Bearing number	Housing number	Mass of unit kg / lb
UEL211D1W3	FLU211D1	3.6
UEL211-200D1W3	FLU211D1	
UEL211-201D1W3	FLU211D1	7.9
UEL211-202D1W3	FLU211D1	
UEL211-203D1W3	FLU211D1	
UEL212D1W3	FLU212D1	4.0
UEL212-204D1W3	FLU212D1	
UEL212-205D1W3	FLU212D1	8.8
UEL212-206D1W3	FLU212D1	
UEL212-207D1W3	FLU212D1	
UEL213D1W3	FLU213D1	5.6
UEL213-208D1W3	FLU213D1	12
UEL213-209D1W3	FLU213D1	
UEL214D1W3	FLU214D1	6.3
UEL214-210D1W3	FLU214D1	
UEL214-211D1W3	FLU214D1	14
UEL214-212D1W3	FLU214D1	
UEL215D1W3	FLU215D1	6.8
UEL215-213D1W3	FLU215D1	
UEL215-214D1W3	FLU215D1	15
UEL215-215D1W3	FLU215D1	
UEL215-300D1W3	FLU215D1	

Light rhombus flanged unit, cast housing
Eccentric locking collar type

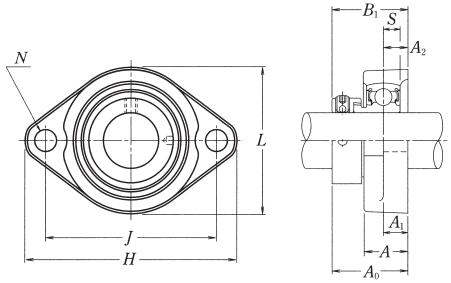

Shaft dia. mm / inch	Unit number (1)	Nominal dimensions mm / inch H	J	A_2	A_1	A	N	L	A_0	B_1	S	Bolt size mm / inch
12	AELFB201W3	81	63.5	9.5	9.5	18	7	56	31.6	28.6	6.5	M6
1/2	AELFB201-008W3	3 3/16	2 1/2	3/8	3/8	23/32	9/32	2 7/32	1 1/4	1.126	0.256	1/4
15	AELFB202W3	81	63.5	9.5	9.5	18	7	56	31.6	28.6	6.5	M6
9/16	AELFB202-009W3											
5/8	AELFB202-010W3	3 3/16	2 1/2	3/8	3/8	23/32	9/32	2 7/32	1 1/4	1.126	0.256	1/4
17	AELFB203W3	81	63.5	9.5	9.5	18	7	56	31.6	28.6	6.5	M6
1/2	AELFB203-011W3	3 3/16	2 1/2	3/8	3/8	23/32	9/32	2 7/32	1 1/4	1.126	0.256	1/4
20	AELFB204W3	90	71.5	11	11	20	10	61	34.5	31	7.5	M8
3/4	AELFB204-012W3	3 17/32	2 13/16	7/16	7/16	25/32	25/64	2 13/32	1 23/64	1.220	0.295	5/16
25	AELFB205W3	95	76	11	11	20	10	64	34.5	31	7.5	M8
13/16	AELFB205-013W3											
7/8	AELFB205-014W3											
15/16	AELFB205-015W3	3 3/4	2 63/64	7/16	7/16	25/32	25/64	2 17/32	1 23/64	1.220	0.295	5/16
1	AELFB205-100W3											
30	AELFB206W3	113	90.5	12	12	22.5	12	76	38.7	35.7	9	M10
1 1/16	AELFB206-101W3											
1 1/8	AELFB206-102W3											
1 3/16	AELFB206-103W3	4 7/16	3 9/16	15/32	15/32	7/8	15/32	3	1 17/32	1.406	5415	3/8
1 1/4	AELFB206-104W3											
35	AELFB207W3	122	100	11	13	24	12	89	40.4	38.9	9.5	M10
1 1/4	AELFB207-104W3											
1 5/16	AELFB207-105W3											
1 3/8	AELFB207-106W3	4 13/16	3 15/16	7/16	1/2	15/16	15/32	3 1/2	1 19/32	1.531	0.374	3/8
1 7/16	AELFB207-107W3											

Note (1) If relubricatable type is needed, please order with suffix "D1".

Bearing number	Housing number	Mass of unit kg / lb
AEL201W3	FB201	0.3
AEL201-008W3	FB201	0.7
AEL202W3	FB201	0.3
AEL202-009W3	FB201	0.7
AEL202-010W3	FB201	
AEL203W3	FB201	0.3
AEL203-011W3	FB201	0.7
AEL204W3	FB204	0.4
AELB204-012W3	FB204	0.9
AEL205W3	FB205	0.4
AEL205-013W3	FB205	0.9
AEL205-014W3	FB205	
AEL205-015W3	FB205	
AEL205-100W3	FB205	
AEL206W3	FB206	0.6
AEL206-101W3	FB206	1.3
AEL206-102W3	FB206	
AEL206-103W3	FB206	
AEL206-104W3	FB206	
AEL207W3	FB207	0.9
AEL207-104W3	FB207	2.0
AEL207-105W3	FB207	
AEL207-106W3	FB207	
AEL207-107W3	FB207	

Light rhombus flanged unit, cast housing
Eccentric locking collar type

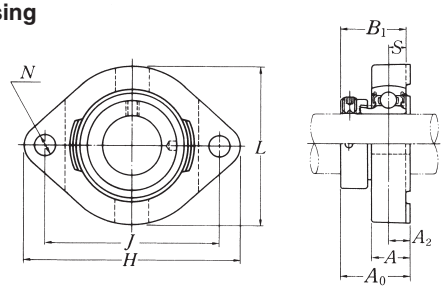

Shaft dia. mm / inch	Unit number (1)	Nominal dimensions mm / inch H	J	A_2	A	N	L	A_0	B_1	S	Bolt size mm / inch
12	AELFD201W3	81	63	8.5	15	7	59	30.6	28.6	6.5	M6
1/2	AELFD201-008W3	3 3/16	2 31/64	21/64	19/32	9/32	2 5/16	1 13/64	1.126	0.256	1/4
15	AELFD202W3	81	63	8.5	15	7	59	30.6	28.6	6.5	M6
9/16	AELFD202-009W3	3 3/16	2 31/64	21/64	19/32	9/32	2 5/16	1 13/64	1.126	0.256	1/4
5/8	AELFD202-010W3										
17	AELFD203W3	81	63	8.5	15	7	59	30.6	28.6	6.5	M6
11/16	AELFD203-011W3	3 3/16	2 31/64	21/64	19/32	9/32	2 5/16	1 13/64	1.126	0.256	1/4
20	AELFD204W3	90	71	9.5	17	10	67	33	31	7.5	M8
3/4	AELFD204-012W3	3 17/32	2 51/64	3/8	21/32	25/64	2 5/8	1 19/64	1.220	0.295	5/16
25	AELFD205W3	95	76	9.5	17	10	71	33	31	7.5	M8
13/16	AELFD205-013W3	3 3/4	2 63/64	3/8	21/32	25/64	2 25/32	1 19/64	1.220	0.295	5/16
7/8	AELFD205-014W3										
15/16	AELFD205-015W3										
1	AELFD205-100W3										
30	AELFD206W3	113	90	12	21	12	84	38.7	35.7	9	M10
1 1/16	AELFD206-101W3	4 7/16	3 35/64	15/32	13/16	15/32	3 5/16	1 17/32	1.406	0.354	3/8
1 1/8	AELFD206-102W3										
1 3/16	AELFD206-103W3										
1 1/4	AELFD206-104W3										
35	AELFD207W3	125	100	12.5	22	12	94	41.9	38.9	9.5	M10
1 1/4	AELFD207-104W3	4 29/32	3 15/16	31/64	7/8	15/32	3 11/16	1 21/32	1.531	0.374	3/8
1 5/16	AELFD207-105W3										
1 3/8	AELFD207-106W3										
1 7/16	AELFD207-107W3										
40	AELFD208W3	148	119	14.5	25	13.5	104	47.2	43.7	11	M12
1 1/2	AELFD208-108W3	5 13/16	4 11/16	37/64	31/32	17/32	4 3/32	1 27/32	1.720	0.433	7/16
1 9/16	AELFD208-109W3										

Note (1) If relubricatable type is needed, please order with sufix "A-" "D1". Example: A-AELFD201D1W3

Bearing number	Housing number	Mass of unit kg / lb
AEL201W3	FD201	0.3
AEL201-008W3	FD201	0.7
AEL202W3	FD201	0.3
AEL202-009W3	FD201	0.7
AEL202-010W3	FD201	
AEL203W3	FD201	0.3
AEL203-011W3	FD201	0.7
AEL204W3	FD204	0.4
AEL204-012W3	FD204	0.9
AEL205W3	FD205	0.5
AEL205-013W3	FD205	1.1
AEL205-014W3	FD205	
AEL205-015W3	FD205	
AEL205-100W3	FD205	
AEL206W3	FD206	0.8
AEL206-101W3	FD206	1.8
AEL206-102W3	FD206	
AEL206-103W3	FD206	
AEL206-104W3	FD206	
AEL207W3	FD207	1.1
AEL207-104W3	FD207	2.4
AEL207-105W3	FD207	
AEL207-106W3	FD207	
AEL207-107W3	FD207	
AEL208W3	FD208	1.5
AEL208-108W3	FD208	3.3
AEL208-109W3	FD208	

Light rhombus flanged unit, cast housing
Eccentric locking collar type

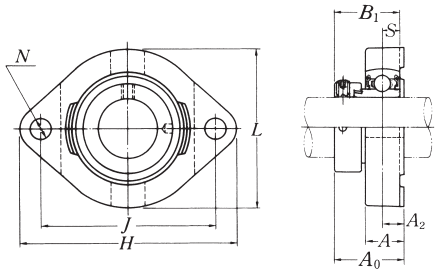

Shaft dia. mm / inch	Unit number (1)	Nominal dimensions mm / inch H	J	A2	A	N	L	A0	B1	S	Bolt size mm / inch	Bearing number	Housing number	Mass of unit kg / lb
12	JELFD201W3	81	63	8.5	15	7	59	30.6	28.6	6.5	M6	JEL201W3	FD201	0.3
1/2	JELFD201-008W3	3 3/16	2 31/64	21/64	19/32	9/32	2 5/16	1 13/64	1.126	0.256	1/4	JEL201-008W3	FD201	0.7
15	JELFD202W3	81	63	8.5	15	7	59	30.6	28.6	6.5	M6	JEL202W3	FD201	0.3
9/16	JELFD202-009W3	3 3/16	2 31/64	21/64	19/32	9/32	2 5/16	1 13/64	1.126	0.256	1/4	JEL202-009W3	FD201	0.7
5/8	JELFD202-010W3											JEL202-010W3	FD201	
17	JELFD203W3	81	63	8.5	15	7	59	30.6	28.6	6.5	M6	JEL203W3	FD201	0.3
11/16	JELFD203-011W3	3 3/16	2 31/64	21/64	19/32	9/32	2 5/16	1 13/64	1.126	0.256	1/4	JEL203-011W3	FD201	0.7
20	JELFD204W3	90	71	9.5	17	10	67	33	31	7.5	M8	AEL204W3	FD204	0.4
3/4	JELFD204-012W3	3 17/32	2 51/64	3/8	21/32	25/64	2 5/8	1 19/64	1.220	0.295	5/16	JEL204-012W3	FD204	0.9
25	JELFD205W3	95	76	9.5	17	10	71	33	31	7.5	M8	JEL205W3	FD205	0.5
13/16	JELFD205-013W3	3 3/4	2 63/64	3/8	21/32	25/64	2 25/32	1 19/64	1.220	0.295	5/16	JEL205-013W3	FD205	1.1
7/8	JELFD205-014W3											JEL205-014W3	FD205	
15/16	JELFD205-015W3											JEL205-015W3	FD205	
1	JELFD205-100W3											JEL205-100W3	FD205	
30	JELFD206W3	113	90	12	21	12	84	38.7	35.7	9	M10	JEL206W3	FD206	0.8
1 1/16	JELFD206-101W3	4 7/16	3 35/64	15/32	13/16	15/32	3 5/16	1 17/32	1.406	0.354	3/8	JEL206-101W3	FD206	1.8
1 1/8	JELFD206-102W3											JEL206-102W3	FD206	
1 3/16	JELFD206-103W3											JEL206-103W3	FD206	
1 1/4	JELFD206-104W3											JEL206-104W3	FD206	
35	JELFD207W3	125	100	12.5	22	12	94	41.9	38.9	9.5	M10	JEL207W3	FD207	1.1
1 1/4	JELFD207-104W3	4 29/32	3 15/16	31/64	7/8	15/32	3 11/16	1 21/32	1.531	0.374	3/8	JEL207-104W3	FD207	2.4
1 5/16	JELFD207-105W3											JEL207-105W3	FD207	
1 3/8	JELFD207-106W3											JEL207-106W3	FD207	
1 7/16	JELFD207-107W3											JEL207-107W3	FD207	
40	JELFD208W3	148	119	14.5	25	13.5	104	47.2	43.7	11	M12	JEL208W3	FD208	1.5
1 1/2	JELFD208-108W3	5 13/16	4 11/16	37/64	31/32	17/32	4 3/32	1 27/32	1.720	0.433	7/16	JEL208-108W3	FD208	3.3
1 9/16	JELFD208-109W3											JEL208-109W3	FD208	

Note (1) If relubricatable type is needed, please order with sufix "A-" "D1". Example:A-JELFD201D1W3

Round flanged unit, pressed steel housing
Eccentric locking collar type

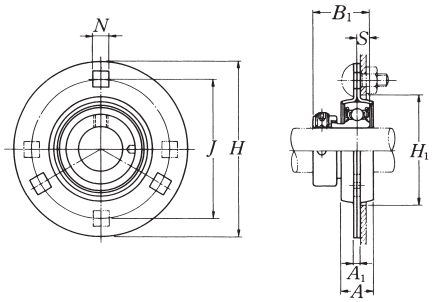

Shaft dia. mm / inch	Unit number	Nominal dimensions mm / inch: H	J	A_1	N(1)	A	B_1	S	H_1 min.	Bolt size mm / inch
12	AELPF201W3	81	63.5	4	7.1	14	28.6	6.5	49	M6
1/2	AELPF201-008W3	3 3/16	2 1/2	0.157	9/32	9/16	1.126	0.256	1 15/16	1/4
15	AELPF202W3	81	63.5	4	7.1	14	28.6	6.5	49	M6
9/16	AELPF202-009W3	3 3/16	2 1/2	0.157	9/32	9/16	1.126	0.256	1 15/16	1/4
5/8	AELPF202-010W3									
17	AELPF203W3	81	63.5	4	7.1	14	28.6	6.5	49	M6
11/16	AELPF203-011W3	3 3/16	2 1/2	0.157	9/32	9/16	1.126	0.256	1 15/16	1/4
20	AELPF204W3	90	71.5	4	9	16	31	7.5	56	M8
3/4	AELPF204-012W3	3 35/64	2 13/16	0.157	23/64	5/8	1.220	0.295	2 7/32	5/16
25	AELPF205W3	95	76	4	9	18	31	7.5	60	M8
13/16	AELPF205-013W3	3 3/4	2 63/64	0.157	23/64	23/32	1.220	0.295	2 3/8	5/16
7/8	AELPF205-014W3									
15/16	AELPF205-015W3									
1	AELPF205-100W3									
30	AELPF206W3	113	90.5	5.2	11	18	35.7	9	71	M10
1 1/16	AELPF206-101W3	4 7/16	3 9/16	0.205	7/16	23/32	1.406	0.354	2 13/16	3/8
1 1/8	AELPF206-102W3									
1 3/16	AELPF206-103W3									
1 1/4	AELPF206-104W3									
35	AELPF207W3	122	100	5.2	11	20	38.9	9.5	81	M10
1 1/4	AELPF207-104W3	4 13/16	3 15/16	0.205	7/16	25/32	1.531	0.374	3 3/16	3/8
1 5/16	AELPF207-105W3									
1 3/8	AELPF207-106W3									
1 7/16	AELPF207-107W3									
40	AELPF208W3	148	119	6.8	13.5	21	43.7	11	91	M12
1 1/2	AELPF208-108W3	5 13/16	4 11/16	0.268	17/32	13/16	1.720	0.433	3 19/32	1/2
1 9/16	AELPF208-109W3									

Notes (1) AELPF208 has four bolt holes.
(2) The permissible load only applies in applications where the load is stable and the speed is 2400 min^{-1} or less.

Max. load (2) recommended N / lbf: radial	axial	Bearing number	Housing number	Mass of unit kg / lb
2 700	1 350	AEL201W3	PF203	0.3
600	300	AEL201-008W3	PF203	0.7
2 700	1 350	AEL202W3	PF203	0.3
600	300	AEL202-009W3	PF203	0.7
		AEL202-010W3	PF203	
2 700	1 350	AEL203W3	PF203	0.3
600	300	AEL203-011W3	PF203	0.7
3 000	1 500	AEL204W3	PF204	0.3
660	330	AEL204-012W3	PF204	0.7
4 000	2 000	AEL205W3	PF205	0.4
880	440	AEL205-013W3	PF205	0.9
		AEL205-014W3	PF205	
		AEL205-015W3	PF205	
		AEL205-100W3	PF205	
5 000	2 500	AEL206W3	PF206	0.6
1 100	550	AEL206-101W3	PF206	1.3
		AEL206-102W3	PF206	
		AEL206-103W3	PF206	
		AEL206-104W3	PF206	
6 000	3 000	AEL207W3	PF207	0.8
1 300	650	AEL207-104W3	PF207	1.8
		AEL207-105W3	PF207	
		AEL207-106W3	PF207	
		AEL207-107W3	PF207	
7 000	3 500	AEL208W3	PF208	1.4
1 500	750	AEL208-108W3	PF208	3.1
		AEL208-109W3	PF208	

Round flanged unit, pressed steel housing
Eccentric locking collar type

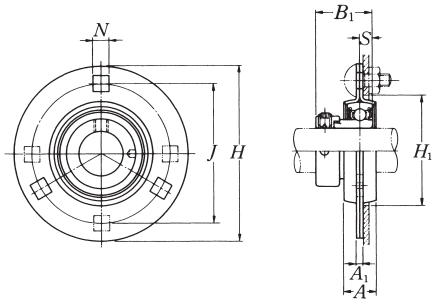

Shaft dia. mm / inch	Unit number	Nominal dimensions mm / inch: H	J	A_1	N(1)	A	B_1	S	H_1 min.	Bolt size mm / inch
12	JELPF201W3	81	63.5	4	7.1	14	28.6	6.5	49	M6
1/2	JELPF201-008W3	3 3/16	2 1/2	0.157	9/32	9/16	1.126	0.256	1 15/16	1/4
15	JELPF202W3	81	63.5	4	7.1	14	28.6	6.5	49	M6
9/16	JELPF202-009W3	3 3/16	2 1/2	0.157	9/32	9/16	1.126	0.256	1 15/16	1/4
5/8	JELPF202-010W3									
17	JELPF203W3	81	63.5	4	7.1	14	28.6	6.5	49	M6
11/16	JELPF203-011W3	3 3/16	2 1/2	0.157	9/32	9/16	1.126	0.256	1 15/16	1/4
20	JELPF204W3	90	71.5	4	9	16	31	7.5	56	M8
3/4	JELPF204-012W3	3 35/64	2 13/16	0.157	23/64	5/8	1.220	0.295	2 7/32	5/16
25	JELPF205W3	95	76	4	9	18	31	7.5	60	M8
13/16	JELPF205-013W3	3 3/4	2 63/64	0.157	23/64	23/32	1.220	0.295	2 3/8	5/16
7/8	JELPF205-014W3									
15/16	JELPF205-015W3									
1	JELPF205-100W3									
30	JELPF206W3	113	90.5	5.2	11	18	35.7	9	71	M10
1 1/16	JELPF206-101W3	4 7/16	3 9/16	0.205	7/16	23/32	1.406	0.354	2 13/16	3/8
1 1/8	JELPF206-102W3									
1 3/16	JELPF206-103W3									
1 1/4	JELPF206-104W3									
35	JELPF207W3	122	100	5.2	11	20	38.9	9.5	81	M10
1 1/4	JELPF207-104W3	4 13/16	3 15/16	0.205	7/16	25/32	1.531	0.374	3 3/16	3/8
1 5/16	JELPF207-105W3									
1 3/8	JELPF207-106W3									
1 7/16	JELPF207-107W3									
40	JELPF208W3	148	119	6.8	13.5	21	43.7	11.0	91	M12
1 1/2	JELPF208-108W3	5 13/16	4 11/16	0.268	17/32	13/16	1.720	0.433	3 19/32	1/2
1 9/16	JELPF208-109W3									

Notes (1) JELPF208 has four bolt holes.
(2) The permissible load only applies in applications where the load is stable and the speed is 2400 min^{-1} or less.

Max. load (2) recommended N / lbf: radial	axial	Bearing number	Housing number	Mass of unit kg / lb
2 700	1 350	JEL201W3	PF203	0.3
600	300	JEL201-008W3	PF203	0.7
2 700	1 350	JEL202W3	PF203	0.3
600	300	JEL202-009W3	PF203	0.7
		JEL202-010W3	PF203	
2 700	1 350	JEL203W3	PF203	0.3
600	300	JEL203-011W3	PF203	0.7
3 000	1 500	JEL204W3	PF204	0.3
660	330	JEL204-012W3	PF204	0.7
4 000	2 000	JEL205W3	PF205	0.4
880	440	JEL205-013W3	PF205	0.9
		JEL205-014W3	PF205	
		JEL205-015W3	PF205	
		JEL205-100W3	PF205	
5 000	2 500	JEL206W3	PF206	0.6
1 100	550	JEL206-101W3	PF206	1.3
		JEL206-102W3	PF206	
		JEL206-103W3	PF206	
		JEL206-104W3	PF206	
6 000	3 000	JEL207W3	PF207	0.8
1 300	650	JEL207-104W3	PF207	1.8
		JEL207-105W3	PF207	
		JEL207-106W3	PF207	
		JEL207-107W3	PF207	
7 000	3 500	JEL208W3	PF208	1.4
1 500	750	JEL208-108W3	PF208	3.1
		JEL208-109W3	PF208	

Round flanged unit, pressed steel housing with rubber ring
Eccentric locking collar type

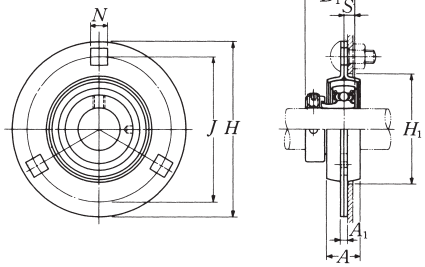

Shaft dia. mm / inch	Unit number	Nominal dimensions mm / inch H	J	A_1	N	A	B_1	S	H_1 min.	Bolt size mm / inch	Max. load (1) recommended N / lbf radial	axial	Bearing number	Housing number rubber ring	steel	Mass of unit kg / lb
12	AELRPF201W3	90	71.5	4	9	16	28.6	6.5	56	M8	1 000	200	AEL201W3	R201	PF204	0.3
1/2	AELRPF201-008W3	3 35/64	2 13/16	0.157	23/64	5/8	1.126	0.256	2 7/32	5/16	220	40	AEL201-008W3	R201	PF204	0.7
15	AELRPF202W3	90	71.5	4	9	16	28.6	6.5	56	M8	1 000	200	AEL202W3	R201	PF204	0.3
9/16	AELRPF202-009W3	3 35/64	2 13/16	0.157	23/64	5/8	1.126	0.256	2 7/32	5/16	220	40	AEL202-009W3	R201	PF204	0.7
5/8	AELRPF202-010W3												AEL202-010W3	R201	PF204	
17	AELRPF203W3	90	71.5	4	9	16	28.6	6.5	56	M8	1 000	200	AEL203W3	R201	PF204	0.3
11/16	AELRPF203-011W3	3 35/64	2 13/16	0.157	23/64	5/8	1.126	0.256	2 7/32	5/16	220	40	AEL203-011W3	R201	PF204	0.7
20	AELRPF204W3	95	76	4	9	18	31	7.5	60	M8	1 150	200	AEL204W3	R204	PF205	0.4
3/4	AELRPF204-012W3	3 3/4	2 63/64	0.157	23/64	23/32	1.220	0.295	2 3/8	5/16	250	40	AEL204-012W3	R204	PF205	0.9
25	AELRPF205W3	113	90.5	5.2	11	18	31	7.5	71	M10	1 300	200	AEL205W3	R205	PF206	0.5
13/16	AELRPF205-013W3	4 7/16	3 9/16	0.205	7/16	23/32	1.220	0.295	2 13/16	3/8	280	40	AEL205-013W3	R205	PF206	1.1
7/8	AELRPF205-014W3												AEL205-014W3	R205	PF206	
15/16	AELRPF205-015W3												AEL205-015W3	R205	PF206	
1	AELRPF205-100W3												AEL205-100W3	R205	PF206	
30	AELRPF206W3	122	100	5.2	11	20	35.7	9	81	M10	1 500	200	AEL206W3	R206	PF207	0.7
1 1/16	AELRPF206-101W3	4 13/16	3 15/16	0.205	7/16	25/32	1.406	0.354	3 3/16	3/8	330	40	AEL206-101W3	R206	PF207	1.5
1 1/8	AELRPF206-102W3												AEL206-102W3	R206	PF207	
1 3/16	AELRPF206-103W3												AEL206-103W3	R206	PF207	
1 1/4	AELRPF206-104W3												AEL206-104W3	R206	PF207	

Note (1) The permissible load only applies in applications where the load is stable and the speed is 2400 min^{-1} or less.
Remarks When an anti -vibration rubber ring is used, the self alignment capability will be reduce.

Rhombus flanged unit, pressed steel housing
Eccentric locking collar type

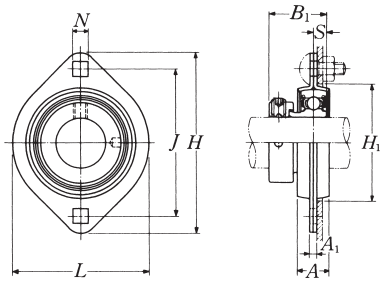

Shaft dia. mm / inch	Unit number	Nominal dimensions mm / inch H	J	A_1	N	A	L	B_1	S	H_1	Bolt size mm / inch
12	AELPFL201W3	81	63.5	4	7.1	14	59	28.6	6.5	49	M6
1/2	AELPFL201-008W3	3 3/16	2 1/2	0.157	9/32	9/16	2 5/16	1.126	0.256	1 15/16	1/4
15	AELPFL202W3	81	63.5	4	7.1	14	59	28.6	6.5	49	M6
9/16	AELPFL202-009W3	3 3/16	2 1/2	0.157	9/32	9/16	2 5/16	1.126	0.256	1 15/16	1/4
5/8	AELPFL202-010W3										
17	AELPFL203W3	81	63.5	4	7.1	14	59	28.6	6.5	49	M6
11/16	AELPFL203-011W3	3 3/16	2 1/2	0.157	9/32	9/16	2 5/16	1.126	0.256	1 15/16	1/4
20	AELPFL204W3	90	71.5	4	9	16	67	31	7.5	56	M8
3/4	AELPFL204-012W3	3 35/64	2 13/16	0.157	23/64	5/8	2 5/8	1.220	0.295	2 7/32	5/16
25	AELPFL205W3	95	76	4	9	18	71	31	7.5	60	M8
13/16	AELPFL205-013W3	3 3/4	2 63/64	0.157	23/64	23/32	2 25/32	1.220	0.295	2 3/8	5/16
7/8	AELPFL205-014W3										
15/16	AELPFL205-015W3										
1	AELPFL205-100W3										
30	AELPFL206W3	113	90.5	5.2	11	18	84	35.7	9	71	M10
1 1/16	AELPFL206-101W3	4 7/16	3 9/16	0.205	7/16	23/32	3 5/16	1.406	0.354	2 13/16	3/8
1 1/8	AELPFL206-102W3										
1 3/16	AELPFL206-103W3										
1 1/4	AELPFL206-104W3										
35	AELPFL207W3	122	100	5.2	11	20	94	38.9	9.5	81	M10
1 1/4	AELPFL207-104W3	4 13/16	3 15/16	0.205	7/16	25/32	3 11/16	1.531	0.374	3 3/16	3/8
1 5/16	AELPFL207-105W3										
1 3/8	AELPFL207-106W3										
1 7/16	AELPFL207-107W3										
40	AELPFL208W3	148	119	6.8	13.5	21	100	43.7	11	91	M12
1 1/2	AELPFL208-108W3	5 13/16	4 11/16	0.268	17/32	13/16	3 15/16	1.720	0.433	3 19/32	1/2
1 9/16	AELPFL208-109W3										

Note (1) The permissible load only applies in applications where the load is stable and the speed is 2400 min^{-1} or less.

Max. load (1) recommended N / lbf radial	axial	Bearing number	Housing number	Mass of unit kg / lb
2 700	1 350	AEL201W3	PFL203W3	0.3
600	300	AEL201-008W3	PFL203W3	0.7
2 700	1 350	AEL202W3	PFL203W3	0.3
600	300	AEL202-009W3 AEL202-010W3	PFL203W3 PFL203W3	0.7
2 700	1 350	AEL203W3	PFL203W3	0.3
600	300	AEL203-011W3	PFL203W3	0.7
3 000	1 500	AEL204W3	PFL204W3	0.3
660	330	AEL204-012W3	PFL204W3	0.7
4 000	2 000	AEL205W3	PFL205W3	0.4
880	440	AEL205-013W3 AEL205-014W3 AEL205-015W3 AEL205-100W3	PFL205W3 PFL205W3 PFL205W3 PFL205W3	0.9
5 000	2 500	AEL206W3	PFL206W3	0.6
1 100	550	AEL206-101W3 AEL206-102W3 AEL206-103W3 AEL206-104W3	PFL206W3 PFL206W3 PFL206W3 PFL206W3	1.3
6 000	3 000	AEL207W3	PFL207W3	0.9
1 300	650	AEL207-104W3 AEL207-105W3 AEL207-106W3 AEL207-107W3	PFL207W3 PFL207W3 PFL207W3 PFL207W3	2.0
6 000	3 000	AEL208W3	PFL208W3	1.3
1 300	650	AEL208-108W3 AEL208-109W3	PFL208W3 PFL208W3	2.9

Rhombus flanged unit, pressed steel housing
Eccentric locking collar type

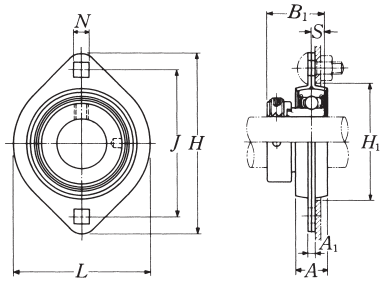

Shaft dia. mm / inch	Unit number	Nominal dimensions mm / inch H	J	A_1	N	A	L	B_1	S	H_1	Bolt size mm / inch
12	JELPFL201W3	81	63	4	7.1	14	59	28.6	6.5	49	M6
1/2	JELPFL201-008W3	3 3/16	2 31/64	0.157	9/32	9/16	2 5/16	1.126	0.256	1 15/16	1/4
15	JELPFL202W3	81	63	4	7.1	14	59	28.6	6.5	49	M6
9/16	JELPFL202-009W3	3 3/16	2 31/64	0.157	9/32	9/16	2 5/16	1.126	0.256	1 15/16	1/4
5/8	JELPFL202-010W3										
17	JELPFL203W3	81	63	4	7.1	14	59	28.6	6.5	49	M6
11/16	JELPFL203-011W3	3 3/16	2 31/64	0.157	9/32	9/16	2 5/16	1.126	0.256	1 15/16	1/4
20	JELPFL204W3	90	71	4	9	16	67	31	7.5	56	M8
3/4	JELPFL204-012W3	3 35/64	2 51/64	0.157	23/64	5/8	2 5/8	1.220	0.295	2 7/32	5/16
25	JELPFL205W3	95	76	4	9	18	71	31	7.5	60	M8
13/16	JELPFL205-013W3	3 3/4	2 63/64	0.157	23/64	23/32	2 25/32	1.220	0.295	2 3/8	5/16
7/8	JELPFL205-014W3										
15/16	JELPFL205-015W3										
1	JELPFL205-100W3										
30	JELPFL206W3	113	90	5.2	11	18	84	35.7	9	71	M10
1 1/16	JELPFL206-101W3	4 7/16	3 35/64	0.205	7/16	23/32	3 5/16	1.406	0.354	2 13/16	3/8
1 1/8	JELPFL206-102W3										
1 3/16	JELPFL206-103W3										
1 1/4	JELPFL206-104W3										
35	JELPFL207W3	122	100	5.2	11	20	94	38.9	9.5	81	M10
1 1/4	JELPFL207-104W3	4 13/16	3 15/16	0.205	7/16	25/32	3 11/16	1.531	0.374	3 3/16	3/8
1 5/16	JELPFL207-105W3										
1 3/8	JELPFL207-106W3										
1 7/16	JELPFL207-107W3										
40	JELPFL208W3	148	119	6.8	13.5	21	100	43.7	11	91	M12
1 1/2	JELPFL208-108W3	5 13/16	4 11/16	0.268	17/32	13/16	3 15/16	1.720	0.433	3 19/32	1/2
1 9/16	JELPFL208-109W3										

Note (1) The permissible load only applies in applications where the load is stable and the speed is 2400 min^{-1} or less.

Max. load (1) recommended N / lbf radial	axial	Bearing number	Housing number	Mass of unit kg / lb
2 700	1 350	JEL201W3	PFL203W3	0.3
600	300	JEL201-008W3	PFL203W3	0.7
2 700	1 350	JEL202W3	PFL203W3	0.3
600	300	JEL202-009W3 JEL202-010W3	PFL203W3 PFL203W3	0.7
2 700	1 350	JEL203W3	PFL203W3	0.3
600	300	JEL203-011W3	PFL203W3	0.7
3 000	1 500	JEL204W3	PFL204W3	0.3
660	330	JEL204-012W3	PFL204W3	0.7
4 000	2 000	JEL205W3	PFL205W3	0.4
880	440	JEL205-013W3 JEL205-014W3 JEL205-015W3 JEL205-100W3	PFL205W3 PFL205W3 PFL205W3 PFL205W3	0.9
5 000	2 500	JEL206W3	PFL206W3	0.6
1 100	550	JEL206-101W3 JEL206-102W3 JEL206-103W3 JEL206-104W3	PFL206W3 PFL206W3 PFL206W3 PFL206W3	1.3
6 000	3 000	JEL207W3	PFL207W3	0.9
1 300	650	JEL207-104W3 JEL207-105W3 JEL207-106W3 JEL207-107W3	PFL207W3 PFL207W3 PFL207W3 PFL207W3	2.0
6 000	3 000	JEL208W3	PFL208W3	1.3
1 300	650	JEL208-108W3 JEL208-109W3	PFL208W3 PFL208W3	2.9

Take-up unit, cast housing
Eccentric locking collar type

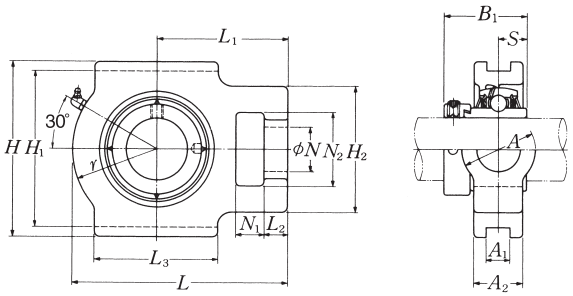

Shaft dia. mm / inch	Unit number (1)	Nominal dimensions mm / inch N_1	L_2	H_2	N_2	N	L_3	A_1	H_1	H	L	A_2	A	r	L_1	B_1	S	Bearing number	Housing number	Mass of unit kg / lb
20	UELT204D1W3	16	12	51	32	19	51	12	76	89	94	21	32	33	61	43.7	17.1	UEL204D1W3	T204D1	0.6
3/4	UELT204-012D1W3	5/8	15/32	2	1 1/4	3/4	2	0.472	2 63/64	3 1/2	3 11/16	13/16	1 1/4	1 5/16	2 13/32	1.720	0.673	UEL204-012D1W3	T204D1	1.3
25	UELT205D1W3	16	12	51	32	19	51	12	76	89	97	24	32	35	62	44.4	17.5	UEL205D1W3	T205D1	0.9
13/16	UELT205-013D1W3																	UEL205-013D1W3	T205D1	
7/8	UELT205-014D1W3	5/8	15/32	2	1 1/4	3/4	2	0.472	2 63/64	3 1/2	3 13/16	15/16	1 1/4	1 3/8	2 7/16	1.748	0.687	UEL205-014D1W3	T205D1	2.0
15/16	UELT205-015D1W3																	UEL205-015D1W3	T205D1	
1	UELT205-100D1W3																	UEL205-100D1W3	T205D1	
30	UELT206D1W3	16	12	56	37	22	57	12	89	102	113	28	37	43	70	48.4	18.25	UEL206D1W3	T206D1	1.4
1 1/16	UELT206-101D1W3																	UEL206-101D1W3	T206D1	
1 1/8	UELT206-102D1W3	5/8	15/32	2 7/32	1 15/32	7/8	2 1/4	0.472	3 1/2	4 1/32	4 7/16	1 3/32	1 15/32	1 11/16	2 3/4	1.906	0.719	UEL206-102D1W3	T206D1	3.1
1 3/16	UELT206-103D1W3																	UEL206-103D1W3	T206D1	
1 1/4	UELT206-104D1W3																	UEL206-104D1W3	T206D1	
35	UELT207D1W3	16	15	64	37	22	64	12	89	102	129	30	37	51	78	51.1	18.8	UEL207D1W3	T207D1	1.7
1 1/4	UELT207-104D1W3																	UEL207-104D1W3	T207D1	
1 5/16	UELT207-105D1W3	5/8	19/32	2 17/32	1 15/32	7/8	2 17/32	0.472	3 1/2	4 1/32	5 3/32	1 3/16	1 15/32	2	3 1/16	2.012	0.740	UEL207-105D1W3	T207D1	3.7
1 3/8	UELT207-106D1W3																	UEL207-106D1W3	T207D1	
1 7/16	UELT207-107D1W3																	UEL207-107D1W3	T207D1	
40	UELT208D1W3	19	18	83	49	29	83	16	102	114	144	33	49	56	88	56.3	21.4	UEL208D1W3	T208D1	2.5
1 1/2	UELT208-108D1W3	3/4	23/32	3 9/32	1 15/16	1 5/32	3 9/32	0.630	4 1/64	4 1/2	5 21/32	1 5/16	1 15/16	2 7/32	3 15/32	2.217	0.843	UEL208-108D1W3	T208D1	5.5
1 9/16	UELT208-109D1W3																	UEL208-109D1W3	T208D1	
45	UELT209D1W3	19	18	83	49	29	83	16	102	117	145	35	49	57	88	56.3	21.4	UEL209D1W3	T209D1	2.5
1 5/8	UELT209-110D1W3																	UEL209-110D1W3	T209D1	
1 11/16	UELT209-111D1W3	3/4	23/32	3 9/32	1 15/16	1 5/32	3 9/32	0.630	4 1/64	4 19/32	5 23/32	1 3/8	1 15/16	2 1/4	3 15/32	2.217	0.843	UEL209-111D1W3	T209D1	5.5
1 3/4	UELT209-112D1W3																	UEL209-112D1W3	T209D1	
50	UELT210D1W3	19	18	83	49	29	86	16	102	117	151	37	49	59	92	62.7	24.6	UEL210D1W3	T210D1	2.7
1 13/16	UELT210-113D1W3																	UEL210-113D1W3	T210D1	
1 7/8	UELT210-114D1W3	3/4	23/32	3 9/32	1 15/16	1 5/32	3 3/8	0.630	4 1/64	4 19/32	5 15/16	1 15/32	1 15/16	2 5/16	3 5/8	2.469	0.969	UEL210-114D1W3	T210D1	6.0
1 15/16	UELT210-115D1W3																	UEL210-115D1W3	T210D1	
2	UELT210-200D1W3																	UEL210-200D1W3	T210D1	

Note (1) These numbers indicate relubricatable type. If maintenance free type is needed, please order without suffix "D1".
Remarks Please refer to page **A21** for size of grease fitting.

Take-up unit, cast housing
Eccentric locking collar type

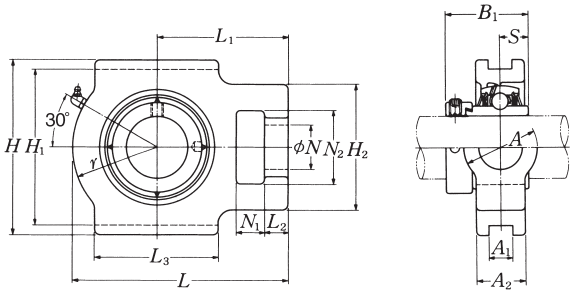

Shaft dia. mm / inch	Unit number (1)	Nominal dimensions mm / inch N_1	L_2	H_2	N_2	N	L_3	A_1	H_1	H	L	A_2	A
55	UELT211D1W3	25	21	102	64	35	95	22	130	146	171	38	64
2	UELT211-200D1W3												
2 1/16	UELT211-201D1W3	31/32	13/16	4 1/32	2 17/32	1 3/8	3 3/4	0.866	5 1/8	5 3/4	6 23/32	1 1/2	2 17/32
2 1/8	UELT211-202D1W3												
2 3/16	UELT211-203D1W3												
60	UELT212D1W3	32	21	102	64	35	102	22	130	146	194	42	64
2 1/4	UELT212-204D1W3												
2 5/16	UELT212-205D1W3	1 1/4	13/16	4 1/32	2 17/32	1 3/8	4 1/32	0.866	5 1/8	5 3/4	7 5/8	1 21/32	2 17/32
2 3/8	UELT212-206D1W3												
2 7/16	UELT212-207D1W3												
65	UELT213D1W3	32	23	111	70	41	121	26	151	167	224	44	70
2 1/2	UELT213-208D1W3	1 1/4	29/32	4 3/8	2 3/4	1 5/8	4 3/4	1.024	5 15/16	6 9/16	8 13/16	1 23/32	2 3/4
2 9/16	UELT213-209D1W3												
70	UELT214D1W3	32	23	111	70	41	121	26	151	167	224	46	70
2 5/8	UELT214-210D1W3												
2 11/16	UELT214-211D1W3	1 1/4	29/32	4 3/8	2 3/4	1 5/8	4 3/4	1.024	5 15/16	6 9/16	8 13/16	1 13/16	2 3/4
2 3/4	UELT214-212D1W3												
75	UELT215D1W3	32	23	111	70	41	121	26	151	167	232	48	70
2 13/16	UELT215-213D1W3												
2 7/8	UELT215-214D1W3	1 1/4	29/32	4 3/8	2 3/4	1 5/8	4 3/4	1.024	5 15/16	6 9/16	9 1/8	1 7/8	2 3/4
2 15/16	UELT215-215D1W3												
3	UELT215-300D1W3												

Note (1) These numbers indicate relubricatable type. If maintenance free type is needed, please order without suffix "D1".
Remarks Please refer to page **A21** for size of grease fitting.

Nominal dimensions mm / inch r	L_1	B_1	S	Bearing number	Housing number	Mass of unit kg / lb
65	106	71.4	27.75	UEL211D1W3	T211D1	4.2
				UEL211-200D1W3	T211D1	
2 9/16	4 3/16	2.811	1.093	UEL211-201D1W3	T211D1	9.3
				UEL211-202D1W3	T211D1	
				UEL211-203D1W3	T211D1	
75	119	77.8	30.95	UEL212D1W3	T212D1	5.2
				UEL212-204D1W3	T212D1	
2 15/16	4 11/16	3.063	1.219	UEL212-205D1W3	T212D1	11
				UEL212-206D1W3	T212D1	
				UEL212-207D1W3	T212D1	
87	137	85.7	34.15	UEL213D1W3	T213D1	7.7
3 7/16	5 13/32	3.374	1.344	UEL213-208D1W3	T213D1	17
				UEL213-209D1W3	T213D1	
87	137	85.7	34.15	UEL214D1W3	T214D1	7.3
				UEL214-210D1W3	T214D1	
3 7/16	5 13/32	3.374	1.344	UEL214-211D1W3	T214D1	16
				UEL214-212D1W3	T214D1	
92	140	92	37.3	UEL215D1W3	T215D1	7.8
				UEL215-213D1W3	T215D1	
3 5/8	5 1/2	3.622	1.469	UEL215-214D1W3	T215D1	17
				UEL215-215D1W3	T215D1	
				UEL215-300D1W3	T215D1	

Take-up unit, cast housing
Eccentric locking collar type

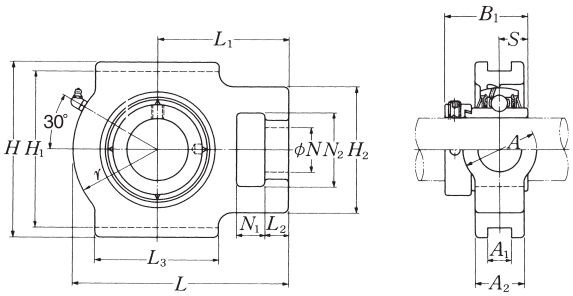

Shaft dia. mm / inch	Unit number (1)	Nominal dimensions mm / inch N_1	L_2	H_2	N_2	N	L_3	A_1	H_1	H	L	A_2	A
25	UELT305D1W3	16	14	62	36	26	65	12	80	89	122	26	36
13/16	UELT305-013D1W3												
7/8	UELT305-014D1W3	5/8	9/16	2 7/16	1 13/32	1 1/32	2 9/16	0.472	3 5/32	3 1/2	4 13/16	1 1/32	1 13/32
15/16	UELT305-015D1W3												
1	UELT305-100D1W3												
30	UELT306D1W3	18	16	70	41	28	74	16	90	100	137	28	41
1 1/16	UELT306-101D1W3												
1 1/8	UELT306-102D1W3	23/32	5/8	2 3/4	1 5/8	1 3/32	2 29/32	0.630	3 35/64	3 15/16	5 13/32	1 3/32	1 5/8
1 3/16	UELT306-103D1W3												
35	UELT307D1W3	20	17	75	45	30	80	16	100	111	150	32	45
1 1/4	UELT307-104D1W3												
1 5/16	UELT307-105D1W3	25/32	21/32	2 15/16	1 25/32	1 3/16	3 5/32	0.630	3 15/16	4 3/8	5 29/32	1 1/4	1 25/32
1 3/8	UELT307-106D1W3												
1 7/16	UELT307-107D1W3												
40	UELT308D1W3	22	19	83	50	32	89	18	112	124	162	34	50
1 1/2	UELT308-108D1W3	7/8	3/4	3 9/32	1 31/32	1 1/4	3 1/2	0.709	4 13/32	4 7/8	6 3/8	1 11/32	1 31/32
1 9/16	UELT308-109D1W3												
45	UELT309D1W3	24	20	90	55	34	97	18	125	138	178	38	55
1 5/8	UELT309-110D1W3												
1 11/16	UELT309-111D1W3	15/16	25/32	3 17/32	2 5/32	1 11/32	3 13/16	0.709	4 59/64	5 7/16	7	1 1/2	2 5/32
1 3/4	UELT309-112D1W3												
50	UELT310D1W3	27	22	98	61	37	106	20	140	151	192	40	61
1 13/16	UELT310-113D1W3												
1 7/8	UELT310-114D1W3	1 1/16	7/8	3 27/32	2 13/32	1 15/32	4 3/16	0.787	5 33/64	5 15/16	7 9/16	1 9/16	2 13/32
1 15/16	UELT310-115D1W3												

Nominal dimensions mm / inch r	L_1	B_1	S	Bearing number	Housing number	Mass of unit kg / lb
46	76	46.8	16.7	UEL305D1W3	T305D1	1.4
				UEL305-013D1W3	T305D1	
				UEL305-014D1W3	T305D1	
1 13/16	3	1.843	0.657	UEL305-015D1W3	T305D1	3.1
				UEL305-100D1W3	T305D1	
52	85	50	17.5	UEL306D1W3	T306D1	1.9
				UEL306-101D1W3	T306D1	
2 1/16	3 11/32	1.969	0.689	UEL306-102D1W3	T306D1	4.2
				UEL306-103D1W3	T306D1	
56	94	51.6	18.3	UEL307D1W3	T307D1	2.4
				UEL307-104D1W3	T307D1	
				UEL307-105D1W3	T307D1	
2 7/32	3 11/16	2.031	0.720	UEL307-106D1W3	T307D1	5.3
				UEL307-107D1W3	T307D1	
62	100	57.1	19.8	UEL308D1W3	T308D1	3.1
2 7/16	3 15/16	2.248	0.780	UEL308-108D1W3	T308D1	6.8
				UEL308-109D1W3	T308D1	
68	110	58.7	19.8	UEL309D1W3	T309D1	4.1
				UEL309-110D1W3	T309D1	
2 11/16	4 11/32	2.311	0.780	UEL309-111D1W3	T309D1	9.0
				UEL309-112D1W3	T309D1	
74	118	66.6	24.6	UEL310D1W3	T310D1	5.2
				UEL310-113D1W3	T310D1	
2 29/32	4 21/32	2.622	0.969	UEL310-114D1W3	T310D1	11
				UEL310-115D1W3	T310D1	

Note (1) These numbers indicate relubricatable type. If maintenance free type is needed, please order without suffix "D1".
Remarks Please refer to page **A21** for size of grease fitting.

Take-up unit, cast housing
Eccentric locking collar type

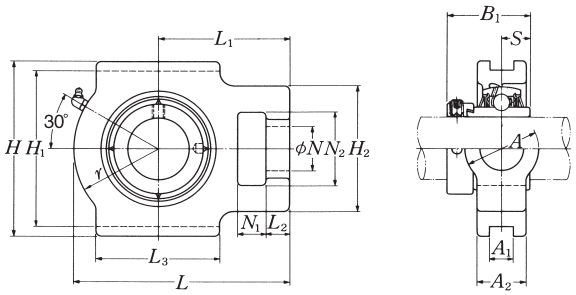

Shaft dia. mm inch	Unit number (1)	Nominal dimensions mm inch N_1	L_2	H_2	N_2	N	L_3	A_1	H_1	H	L	A_2	A
55	UELT311D1W3	29	23	105	66	39	115	22	150	163	207	44	66
2	UELT311-200D1W3												
2 1/16	UELT311-201D1W3	1 5/32	29/32	4 1/8	2 19/32	1 17/32	4 17/32	0.866	5 29/32	6 13/32	8 5/32	1 23/32	2 19/32
2 1/8	UELT311-202D1W3												
2 3/16	UELT311-203D1W3												
60	UELT312D1W3	31	25	113	71	41	123	22	160	178	220	46	71
2 1/4	UELT312-204D1W3												
2 5/16	UELT312-205D1W3	1 7/32	31/32	4 7/16	2 25/32	1 5/8	4 27/32	0.866	6 19/64	7	8 21/32	1 13/16	2 25/32
2 3/8	UELT312-206D1W3												
2 7/16	UELT312-207D1W3												
65	UELT313D1W3	32	27	116	70	43	134	26	170	190	238	50	80
2 1/2	UELT313-208D1W3	1 1/4	1 1/16	4 9/16	2 3/4	1 11/16	5 9/32	1.024	6 11/16	7 15/32	9 3/8	1 31/32	3 5/32
2 9/16	UELT313-209D1W3												
70	UELT314D1W3	36	27	130	85	46	140	26	180	202	252	52	90
2 5/8	UELT314-210D1W3												
2 11/16	UELT314-211D1W3	1 13/32	1 1/16	5 1/8	3 11/32	1 13/16	5 1/2	1.024	7 3/32	7 15/16	9 29/32	2 1/16	3 17/32
2 3/4	UELT314-212D1W3												
75	UELT315D1W3	36	27	132	85	46	150	26	192	216	262	55	90
2 13/16	UELT315-213D1W3												
2 7/8	UELT315-214D1W3	1 13/32	1 1/16	5 3/16	3 11/32	1 13/16	5 29/32	1.024	7 9/16	8 1/2	10 5/16	2 5/32	3 17/32
2 15/16	UELT315-215D1W3												
3	UELT315-300D1W3												
80	UELT316D1W3	42	30	150	98	53	160	30	204	230	282	60	102
3 1/16	UELT316-301D1W3												
3 1/8	UELT316-302D1W3	1 21/32	1 3/16	5 29/32	3 27/32	2 3/32	6 5/16	1.181	8 1/32	9 1/16	11 3/32	2 3/8	4 1/32
3 3/16	UELT316-303D1W3												

Nominal dimensions mm inch r	L_1	B_1	S	Bearing number	Housing number	Mass of unit kg lb
80	127	73	27.8	UEL311D1W3	T311D1	6.6
				UEL311-200D1W3	T311D1	
3 5/32	5	2.874	1.094	UEL311-201D1W3	T311D1	15
				UEL311-202D1W3	T311D1	
				UEL311-203D1W3	T311D1	
85	135	79.4	30.95	UEL312D1W3	T312D1	7.9
				UEL312-204D1W3	T312D1	
3 11/32	5 5/16	3.126	1.219	UEL312-205D1W3	T312D1	17
				UEL312-206D1W3	T312D1	
				UEL312-207D1W3	T312D1	
92	146	85.7	32.55	UEL313D1W3	T313D1	9.8
3 5/8	5 3/4	3.374	1.281	UEL313-208D1W3	T313D1	22
				UEL313-209D1W3	T313D1	
97	155	92.1	34.15	UEL314D1W3	T314D1	11
				UEL314-210D1W3	T314D1	
3 13/16	6 3/32	3.626	1.344	UEL314-211D1W3	T314D1	24
				UEL314-212D1W3	T314D1	
102	160	100	37.3	UEL315D1W3	T315D1	14
				UEL315-213D1W3	T315D1	
4 1/32	6 5/16	3.937	1.469	UEL315-214D1W3	T315D1	31
				UEL315-215D1W3	T315D1	
				UEL315-300D1W3	T315D1	
108	174	106.4	40.5	UEL316D1W3	T316D1	17
				UEL316-301D1W3	T316D1	
4 1/4	6 27/32	4.189	1.594	UEL316-302D1W3	T316D1	37
				UEL316-303D1W3	T316D1	

Note (1) These numbers indicate relubricatable type. If maintenance free type is needed, please order without suffix "D1".
Remarks Please refer to page **A21** for size of grease fitting.

Take-up unit, cast housing
Eccentric locking collar type

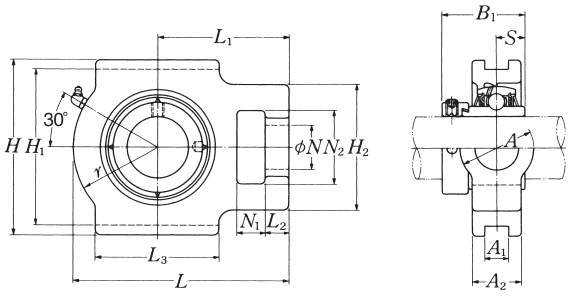

Shaft dia. mm / inch	Unit number (1)	Nominal dimensions mm / inch N_1	L_2	H_2	N_2	N	L_3	A_1	H_1	H	L	A_2	A
85	UELT317D1W3	42	32	152	98	53	170	32	214	240	298	64	102
3 1/4	UELT317-304D1W3												
3 5/16	UELT317-305D1W3	1 21/32	1 1/4	5 31/32	3 27/32	2 3/32	6 11/16	1.260	8 27/64	9 7/16	11 23/32	2 17/32	4 1/32
3 7/16	UELT317-307D1W3												
90	UELT318D1W3	46	32	160	106	57	175	32	228	255	312	66	110
3 7/16	UELT318-307D1W3	1 13/16	1 1/4	6 5/16	4 3/16	2 1/4	6 7/8	1.260	8 31/32	10 1/32	12 9/32	2 19/32	4 11/32
3 1/2	UELT318-308D1W3												
95	UELT319D1W3	46	33	165	106	57	180	35	240	270	322	72	110
3 5/8	UELT319-310D1W3												
3 11/16	UELT319-311D1W3	1 13/16	1 5/16	6 1/2	4 3/16	2 1/4	7 3/32	1.378	9 29/64	10 5/8	12 11/16	2 27/32	4 11/32
3 3/4	UELT319-312D1W3												
100	UELT320D1W3	48	34	175	115	59	200	35	260	290	345	75	120
3 13/16	UELT320-313D1W3												
3 7/8	UELT320-314D1W3	1 7/8	1 11/32	6 7/8	4 17/32	2 5/16	7 7/8	1.378	10 15/64	11 13/32	13 19/32	2 15/16	4 23/32
3 15/16	UELT320-315D1W3												
4	UELT320-400D1W3												
105	UELT321D1W3	48	34	175	115	59	200	35	260	290	347	75	120
110	UELT322D1W3	52	40	185	125	65	215	38	285	320	385	80	130

Note (1) These numbers indicate relubricatable type. If maintenance free type is needed, please order without suffix "D1".
Remarks Please refer to page **A21** for size of grease fitting.

Nominal dimensions mm / inch r	L_1	B_1	S	Bearing number	Housing number	Mass of unit kg / lb
115	183	109.5	42.05	UEL317D1W3	T317D1	20
				UEL317-304D1W3	T317D1	
4 17/32	7 7/32	4.311	1.656	UEL317-305D1W3	T317D1	44
				UEL317-307D1W3	T317D1	
120	192	115.9	43.65	UEL318D1W3	T318D1	23
4 23/32	7 9/16	4.563	1.719	UEL318-307D1W3	T318D1	51
				UEL318-308D1W3	T318D1	
125	197	122.3	38.9	UEL319D1W3	T319D1	26
				UEL319-310D1W3	T319D1	
4 29/32	7 3/4	4.815	1.531	UEL319-311D1W3	T319D1	57
				UEL319-312D1W3	T319D1	
135	210	128.6	50	UEL320D1W3	T320D1	32
				UEL320-313D1W3	T320D1	
5 5/16	8 9/32	5.063	1.969	UEL320-314D1W3	T320D1	71
				UEL320-315D1W3	T320D1	
				UEL320-400D1W3	T320D1	
135	212	139.7	48.4	UEL321D1D1W3	T321D1	33
150	235	141.3	49.2	UEL322D1D1W3	T322D1	42

Take-up mini stretcher Units™
Eccentric locking collar type

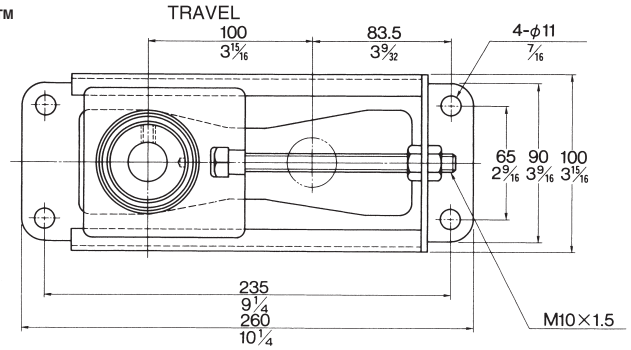

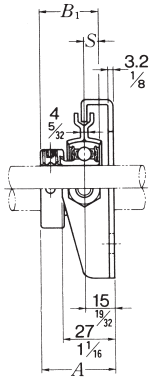

AELPT type

Shaft dia. mm / inch	Unit number	Nominal dimensions mm / inch A	B1	S	Bolt size mm / inch	Max. load (1) recommended N / lbf
12 1/2	AELPT201-10W3 AELPT201-008-10W3	37.1 1 29/64	28.6 1.126	6.5 0.256	M10 3/8	3 430 770
15 9/16 5/8	AELPT202-10W3 AELPT202-009-10W3 AELPT202-010-10W3	37.1 1 29/64	28.6 1.126	6.5 0.256	M10 3/8	3 430 770
17 11/16	AELPT203-10W3 AELPT203-011-10W3	37.1 1 29/64	28.6 1.126	6.5 0.256	M10 3/8	3 430 770
20 3/4	AELPT204-10W3 AELPT204-012-10W3	38.5 1 33/64	31 1.220	7.5 0.295	M10 3/8	3 430 770
25 13/16 7/8 15/16 1	AELPT205-10W3 AELPT205-013-10W3 AELPT205-014-10W3 AELPT205-015-10W3 AELPT205-100-10W3	38.5 1 33/64	31 1.220	7.5 0.295	M10 3/8	3 430 770

Note (1) The Stretcher Units is designed to only take a horizontal radial load, in line with the adjustment direction. Axial loads or vertical radial loads can deform or break the housing.

Bearing number	Mass of unit kg / lb
AEL201W3 AEL201-008W3	1.1 2.4
AEL202W3 AEL202-009W3 AEL202-010W3	1.1 2.4
AEL203W3 AEL203-011W3	1.1 2.4
AEL204W3 AEL204-012W3	1.1 2.4
AEL205W3 AEL205-013W3 AEL205-014W3 AEL205-015W3 AEL205-100W3	1.2 2.6

Take-up mini stretcher Units™
Eccentric locking collar type

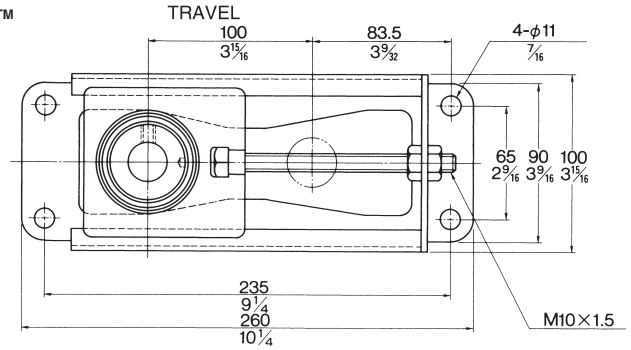

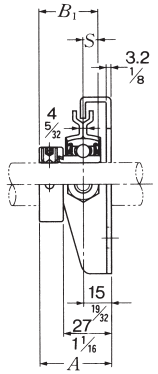

JELPT type

Shaft dia. mm / inch	Unit number	Nominal dimensions mm / inch A	B1	S	Bolt size mm / inch	Max. load (1) recommended N / lbf	Bearing number	Mass of unit kg / lb
12	JELPT201-10W3	37.1	28.6	6.5	M10	3 430	JEL201W3	1.1
1/2	JELPT201-008-10W3	1 29/64	1.126	0.256	3/8	770	JEL201-008W3	2.4
15	JELPT202-10W3	37.1	28.6	6.5	M10	3 430	JEL202W3	1.1
9/16	JELPT202-009-10W3	1 29/64	1.126	0.256	3/8	770	JEL202-009W3	2.4
5/8	JELPT202-010-10W3						JEL202-010W3	
17	JELPT203-10W3	37.1	28.6	6.5	M10	3 430	JEL203W3	1.1
11/16	JELPT203-011-10W3	1 29/64	1.126	0.256	3/8	770	JEL203-011W3	2.4
20	JELPT204-10W3	38.5	31	7.5	M10	3 430	JEL204W3	1.1
3/4	JELPT204-012-10W3	1 33/64	1.220	0.295	3/8	770	JEL204-012W3	2.4
25	JELPT205-10W3	38.5	31	7.5	M10	3 430	JEL205W3	1.2
13/16	JELPT205-013-10W3	1 33/64	1.220	0.295	3/8	770	JEL205-013W3	2.6
7/8	JELPT205-014-10W3						JEL205-014W3	
15/16	JELPT205-015-10W3						JEL205-015W3	
1	JELPT205-100-10W3						JEL205-100W3	

Note (1) The Stretcher Units is designed to only take a horizontal radial load, in line with the adjustment direction. Axial loads or vertical radial loads can deform or break the housing.

Cartridge unit, cast housing
Eccentric locking collar type

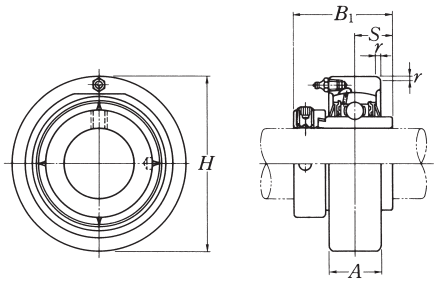

Shaft dia. mm / inch	Unit number (1)	Nominal dimensions mm / inch H	A	r	B_1	S	Bearing number	Housing number	Mass of unit kg / lb
20	UELC204D1W3	72	20	2	43.7	17.1	UEL204D1W3	C204D1	0.6
3/4	UELC204-012D1W3	2.8346	25/32	0.079	1.720	0.673	UEL204-012D1W3	C204D1	1.3
25	UELC205D1W3	80	22	2	44.4	17.45	UEL205D1W3	C205D1	0.7
13/16	UELC205-013D1W3						UEL205-013D1W3	C205D1	
7/8	UELC205-014D1W3	3.1496	55/64	0.079	1.748	0.687	UEL205-014D1W3	C205D1	1.5
15/16	UELC205-015D1W3						UEL205-015D1W3	C205D1	
1	UELC205-100D1W3						UEL205-100D1W3	C205D1	
30	UELC206D1W3	85	27	2	48.4	18.25	UEL206D1W3	C206D1	0.9
1 1/16	UELC206-101D1W3						UEL206-101D1W3	C206D1	
1 1/8	UELC206-102D1W3	3.3465	1 1/16	0.079	1.906	0.719	UEL206-102D1W3	C206D1	2.0
1 3/16	UELC206-103D1W3						UEL206-103D1W3	C206D1	
1 1/4	UELC206-104D1W3						UEL206-104D1W3	C206D1	
35	UELC207D1W3	90	28	2	51.1	18.8	UEL207D1W3	C207D1	1.0
1 1/4	UELC207-104D1W3						UEL207-104D1W3	C207D1	
1 5/16	UELC207-105D1W3	3.5433	1 7/64	0.079	2.012	0.740	UEL207-105D1W3	C207D1	2.2
1 3/8	UELC207-106D1W3						UEL207-106D1W3	C207D1	
1 7/16	UELC207-107D1W3						UEL207-107D1W3	C207D1	
40	UELC208D1W3	100	30	2.5	56.3	21.4	UEL208D1W3	C208D1	1.4
1 1/2	UELC208-108D1W3	3.9370	1 3/16	0.098	2.217	0.843	UEL208-108D1W3	C208D1	3.1
1 9/16	UELC208-109D1W3						UEL208-109D1W3	C208D1	
45	UELC209D1W3	110	31	2.5	56.3	21.4	UEL209D1W3	C209D1	1.6
1 5/8	UELC209-110D1W3						UEL209-110D1W3	C209D1	
1 11/16	UELC209-111D1W3	4.3307	1 7/32	0.098	2.217	0.843	UEL209-111D1W3	C209D1	3.5
1 3/4	UELC209-112D1W3						UEL209-112D1W3	C209D1	

Note (1) These numbers indicate relubricatable type. If maintenance free type is needed, please order without suffix "D1".
Remarks Please refer to page **A21** for size of grease fitting.

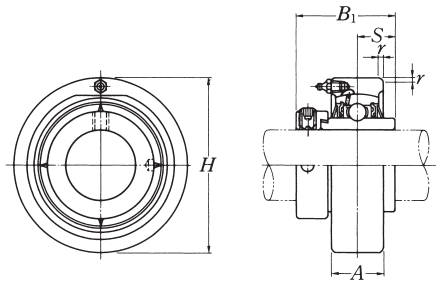

Shaft dia. mm / inch	Unit number (1)	Nominal dimensions mm / inch H	A	r	B_1	S	Bearing number	Housing number	Mass of unit kg / lb
50	UELC210D1W3	120	33	2.5	62.7	24.6	UEL210D1W3	C210D1	2.1
1 13/16	UELC210-113D1W3						UEL210-113D1W3	C210D1	
1 7/8	UELC210-114D1W3	4.7244	1 19/64	0.098	2.469	0.969	UEL210-114D1W3	C210D1	4.6
1 15/16	UELC210-115D1W3						UEL210-115D1W3	C210D1	
2	UELC210-200D1W3						UEL210-200D1W3	C210D1	
55	UELC211D1W3	125	35	2.5	71.4	27.75	UEL211D1W3	C211D1	2.4
2	UELC211-200D1W3						UEL211-200D1W3	C211D1	
2 1/16	UELC211-201D1W3	4.9213	1 3/8	0.098	2.811	1.093	UEL211-201D1W3	C211D1	5.3
2 1/8	UELC211-202D1W3						UEL211-202D1W3	C211D1	
2 3/16	UELC211-203D1W3						UEL211-203D1W3	C211D1	
60	UELC212D1W3	130	38	2.5	77.8	30.95	UEL212D1W3	C212D1	2.8
2 1/4	UELC212-204D1W3						UEL212-204D1W3	C212D1	
2 5/16	UELC212-205D1W3	5.1181	1 1/2	0.098	3.063	1.219	UEL212-205D1W3	C212D1	6.2
2 3/8	UELC212-206D1W3						UEL212-206D1W3	C212D1	
2 7/16	UELC212-207D1W3						UEL212-207D1W3	C212D1	

Note (1) These numbers indicate relubricatable type. If maintenance free type is needed, please order without suffix "D1".
Remarks Please refer to page **A21** for size of grease fitting.

Cartridge unit, cast housing
Eccentric locking collar type

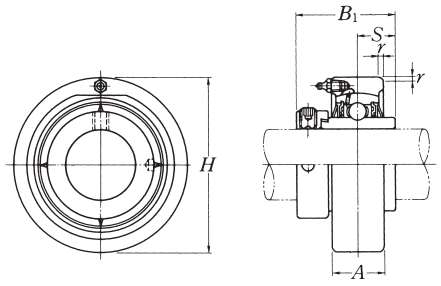

Shaft dia. mm / inch	Unit number (1)	Nominal dimensions mm / inch H	A	r	B_1	S	Bearing number	Housing number	Mass of unit kg / lb
25	**UELC305D1W3**	90	26	2.5	46.8	16.7	UEL305D1W3	C305D1	1.0
13/16	**UELC305-013D1W3**						UEL305-013D1W3	C305D1	
7/8	**UELC305-014D1W3**	3.5433	1 1/32	0.098	1.843	0.657	UEL305-014D1W3	C305D1	2.2
15/16	**UELC305-015D1W3**						UEL305-015D1W3	C305D1	
1	**UELC305-100D1W3**						UEL305-100D1W3	C305D1	
30	**UELC306D1W3**	100	28	2.5	50	17.5	UEL306D1W3	C306D1	1.4
1 1/16	**UELC306-101D1W3**						UEL306-101D1W3	C306D1	
1 1/8	**UELC306-102D1W3**	3.9370	1 7/64	0.098	1.969	0.689	UEL306-102D1W3	C306D1	3.1
1 3/16	**UELC306-103D1W3**						UEL306-103D1W3	C306D1	
35	**UELC307D1W3**	110	32	3	51.6	18.3	UEL307D1W3	C307D1	1.8
1 1/4	**UELC307-104D1W3**						UEL307-104D1W3	C307D1	
1 5/16	**UELC307-105D1W3**	4.3307	1 17/64	0.118	2.031	0.720	UEL307-105D1W3	C307D1	4.0
1 3/8	**UELC307-106D1W3**						UEL307-106D1W3	C307D1	
1 7/16	**UELC307-107D1W3**						UEL307-107D1W3	C307D1	
40	**UELC308D1W3**	120	34	3	57.1	19.8	UEL308D1W3	C308D1	2.3
1 1/2	**UELC308-108D1W3**	4.7244	1 11/32	0.118	2.248	0.780	UEL308-108D1W3	C308D1	5.1
1 9/16	**UELC308-109D1W3**						UEL308-109D1W3	C308D1	
45	**UELC309D1W3**	130	38	3.5	58.7	19.8	UEL309D1W3	C309D1	2.9
1 5/8	**UELC309-110D1W3**						UEL309-110D1W3	C309D1	
1 11/16	**UELC309-111D1W3**	5.1181	1 1/2	0.138	2.311	0.780	UEL309-111D1W3	C309D1	6.4
1 3/4	**UELC309-112D1W3**						UEL309-112D1W3	C309D1	
50	**UELC310D1W3**	140	40	3.5	66.6	24.6	UEL310D1W3	C310D1	3.5
1 13/16	**UELC310-113D1W3**						UEL310-113D1W3	C310D1	
1 7/8	**UELC310-114D1W3**	5.5118	1 37/64	0.138	2.622	0.969	UEL310-114D1W3	C310D1	7.7
1 15/16	**UELC310-115D1W3**						UEL310-115D1W3	C310D1	

Note (1) These numbers indicate relubricatable type. If maintenance free type is needed, please order without suffix "D1".
Remarks Please refer to page **A21** for size of grease fitting.

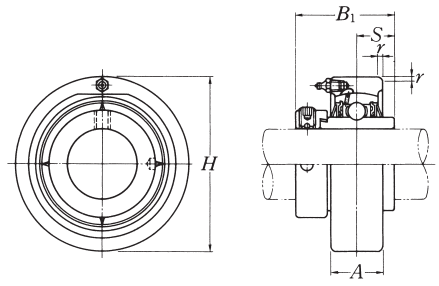

Shaft dia. mm / inch	Unit number (1)	Nominal dimensions mm / inch H	A	r	B_1	S	Bearing number	Housing number	Mass of unit kg / lb
55	**UELC311D1W3**	150	44	3.5	73	27.8	UEL311D1W3	C311D1	4.3
2	**UELC311-200D1W3**						UEL311-200D1W3	C311D1	
2 1/16	**UELC311-201D1W3**	5.9055	1 47/64	0.138	2.874	1.094	UEL311-201D1W3	C311D1	9.5
2 1/8	**UELC311-202D1W3**						UEL311-202D1W3	C311D1	
2 3/16	**UELC311-203D1W3**						UEL311-203D1W3	C311D1	
60	**UELC312D1W3**	160	46	3.5	79.4	30.95	UEL312D1W3	C312D1	5.1
2 1/4	**UELC312-204D1W3**						UEL312-204D1W3	C312D1	
2 5/16	**UELC312-205D1W3**	6.2992	1 13/16	0.138	3.126	1.219	UEL312-205D1W3	C312D1	11
2 3/8	**UELC312-206D1W3**						UEL312-206D1W3	C312D1	
2 7/16	**UELC312-207D1W3**						UEL312-207D1W3	C312D1	
65	**UELC313D1W3**	170	50	3.5	85.7	32.55	UEL313D1W3	C313D1	6.2
2 1/2	**UELC313-208D1W3**	6.6929	1 31/32	0.138	3.374	1.281	UEL313-208D1W3	C313D1	14
2 9/16	**UELC313-209D1W3**						UEL313-209D1W3	C313D1	
70	**UELC314D1W3**	180	52	4	92.1	34.15	UEL314D1W3	C314D1	7.3
2 5/8	**UELC314-210D1W3**						UEL314-210D1W3	C314D1	
2 11/16	**UELC314-211D1W3**	7.0866	2 3/64	0.157	3.626	1.344	UEL314-211D1W3	C314D1	16
2 3/4	**UELC314-212D1W3**						UEL314-212D1W3	C314D1	
75	**UELC315D1W3**	190	55	4	100	37.3	UEL315D1W3	C315D1	8.5
2 13/16	**UELC315-213D1W3**						UEL315-213D1W3	C315D1	
2 7/8	**UELC315-214D1W3**	7.4803	2 11/64	0.157	3.937	1.469	UEL315-214D1W3	C315D1	19
2 15/16	**UELC315-215D1W3**						UEL315-215D1W3	C315D1	
3	**UELC315-300D1W3**						UEL315-300D1W3	C315D1	
80	**UELC316D1W3**	200	60	4	106.4	40.5	UEL316D1W3	C316D1	10
3 1/16	**UELC316-301D1W3**						UEL316-301D1W3	C316D1	
3 1/8	**UELC316-302D1W3**	7.8740	2 23/64	0.157	4.189	1.594	UEL316-302D1W3	C316D1	22
3 3/16	**UELC316-303D1W3**						UEL316-303D1W3	C316D1	

Note (1) These numbers indicate relubricatable type. If maintenance free type is needed, please order without suffix "D1".
Remarks Please refer to page **A21** for size of grease fitting.

Cartridge unit, cast housing
Eccentric locking collar type

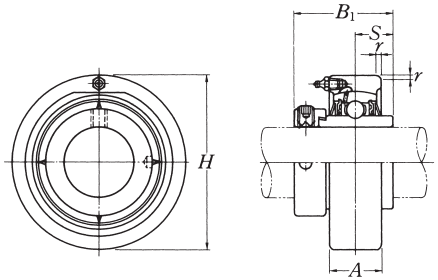

Shaft dia. mm / inch	Unit number (1)	Nominal dimensions mm / inch H	A	r	B_1	S	Bearing number	Housing number	Mass of unit kg / lb
85	UELC317D1W3	215	64	4	109.5	42.05	UEL317D1W3	C317D1	13
3 1/4	UELC317-304D1W3						UEL317-304D1W3	C317D1	
3 5/16	UELC317-305D1W3	8.4646	2 33/64	0.157	4.311	1.656	UEL317-305D1W3	C317D1	29
3 7/16	UELC317-307D1W3						UEL317-307D1W3	C317D1	
90	UELC318D1W3	225	66	4	115.9	43.65	UEL318D1W3	C318D1	14
3 7/16	UELC318-307D1W3	8.8583	2 19/32	0.157	4.563	1.719	UEL318-307D1W3	C318D1	31
3 1/2	UELC318-308D1W3						UEL318-308D1W3	C318D1	
95	UELC319D1W3	240	72	4	122.3	38.9	UEL319D1W3	C319D1	17
3 5/8	UELC319-310D1W3						UEL319-310D1W3	C319D1	
3 11/16	UELC319-311D1W3	9.4488	2 53/64	0.157	4.815	1.531	UEL319-311D1W3	C319D1	37
3 3/4	UELC319-312D1W3						UEL319-312D1W3	C319D1	
100	UELC320D1W3	260	75	4	128.6	50	UEL320D1W3	C320D1	22
3 13/16	UELC320-313D1W3						UEL320-313D1W3	C320D1	
3 7/8	UELC320-314D1W3	10.2362	2 61/64	0.157	5.063	1.969	UEL320-314D1W3	C320D1	49
3 15/16	UELC320-315D1W3						UEL320-315D1W3	C320D1	
4	UELC320-400D1W3						UEL320-400D1W3	C320D1	
105	UELC321D1W3	260	75	4	139.7	48.4	UEL321D1W3	C321D1	21
110	UELC322D1W3	300	80	5	141.3	49.2	UEL322D1W3	C322D1	31

Note (1) These numbers indicate relubricatable type. If maintenance free type is needed, please order without suffix "D1".
Remarks Please refer to page **A21** for size of grease fitting.

Pillow block unit, cast housing
Adapter type

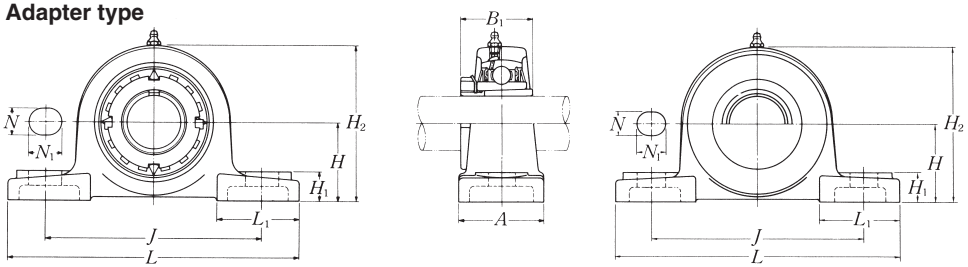

Pressed steel dust cover type
Open end **Z-UKP···D1**
Closed end **ZM-UKP···D1**

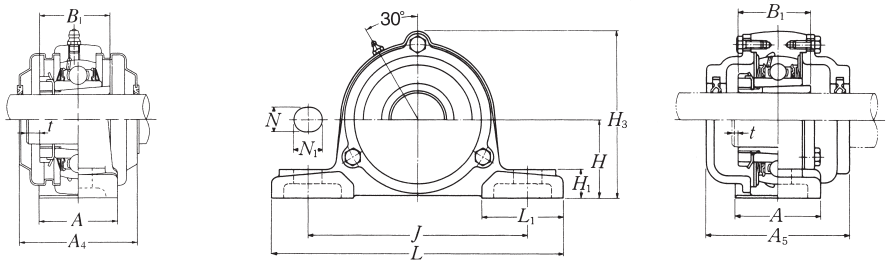

Cast dust cover type
Open end **C-UKP···D1**
Closed end **CM-UKP···D1**

Shaft dia. mm / inch	Unit number (1)(2)(3)	Nominal dimensions mm / inch H	L	J	A	N	N_1	H_1	H_2	L_1	B_1	Bolt size mm / inch	Bearing number
20	UKP205D1;H2305X	36.5	140	105	38	13	16	15	71	42	35	M10	UK205D1;H2305X
3/4	UKP205D1;HE2305	1 7/16	5 1/2	4 1/8	1 1/2	1/2	5/8	19/32	2 25/32	1 21/32	1.378	3/8	UK205D1;HE2305
25	UKP206D1;H2306X	42.9	165	121	48	17	20	17	83	54	38	M14	UK206D1;H2306X
7/8	UKP206D1;HS2306	1 11/16	6 1/2	4 3/4	1 7/8	21/32	25/32	21/32	3 9/32	2 1/8	1.496	1/2	UK206D1;HS2306
1	UKP206D1;HE2306X												UK206D1;HE2306X
30	UKP207D1;H2307X	47.6	167	127	48	17	20	18	93	54	43	M14	UK207D1;H2307X
1 1/8	UKP207D1;HS2307	1 7/8	6 9/16	5	1 7/8	21/32	25/32	23/32	3 21/32	2 1/8	1.693	1/2	UK207D1;HS2307
35	UKP208D1;H2308X	49.2	184	137	54	17	20	18	98	52	46	M14	UK208D1;H2308X
1 1/4	UKP208D1;HE2308X	1 15/16	7 1/4	5 13/32	2 1/8	21/32	25/32	23/32	3 27/32	2 1/16	1.811	1/2	UK208D1;HE2308X
1 3/8	UKP208D1;HS2308X												UK208D1;HS2308X
40	UKP209D1;H2309X	54	190	146	54	17	20	20	106	60	50	M14	UK209D1;H2309X
1 7/16	UKP209D1;HA2309												UK209D1;HA2309
1 1/2	UKP209D1;HE2309X	2 1/8	7 15/32	5 3/4	2 1/8	21/32	25/32	25/32	4 3/16	2 3/8	1.969	1/2	UK209D1;HE2309X
1 5/8	UKP209D1;HS2309X												UK209D1;HS2309X
45	UKP210D1;H2310X	57.2	206	159	60	20	23	21	114	65	55	M16	UK210D1;H2310X
1 5/8	UKP210D1;HS2310												UK210D1;HS2310
1 11/16	UKP210D1;HA2310	2 1/4	8 1/8	6 1/4	2 3/8	25/32	29/32	13/16	4 1/2	2 9/16	2.165	5/8	UK210D1;HA2310
1 3/4	UKP210D1;HE2310X												UK210D1;HE2310X
50	UKP211D1;H2311X	63.5	219	171	60	20	23	23	126	65	59	M16	UK211D1;H2311X
1 7/8	UKP211D1;HS2311												UK211D1;HS2311
1 15/16	UKP211D1;HA2311	2 1/2	8 5/8	6 23/32	2 3/8	25/32	29/32	29/32	4 31/32	2 9/16	2.323	5/8	UK211D1;HA2311
2	UKP211D1;HE2311XY												UK211D1;HE2311XY
55	UKP212D1;H2312X	69.8	241	184	70	20	23	25	138	70	62	M16	UK212D1;H2312X
2 1/8	UKP212D1;HS2312	2 3/4	9 1/2	7 1/4	2 3/4	25/32	29/32	31/32	5 7/16	2 3/4	2.441	5/8	UK212D1;HS2312

Housing number	Unit number pressed steel dust cover type	Unit number cast dust cover type	Nominal dimensions mm / inch t max.	A_4	H_3	A_5	Mass of unit kg / lb UKP	Z(ZM)	C(CM)
P205D1	Z(ZM)-UKP205D1;H2305X	C(CM)-UKP205D1;H2305X	2	48	76	70	0.8	0.9	1.2
P205D1	Z(ZM)-UKP205ED1;HE2305	C(CM)-UKP205ED1;HE2305	5/64	1 29/32	3	2 3/4	1.8	2.0	2.6
P206D1	Z(ZM)-UKP206D1;H2306X	C(CM)-UKP206D1;H2306X	2	53	88	75	1.4	1.5	1.8
P206D1	Z(ZM)-UKP206SD1;HS2306	C(CM)-UKP206SD1;HS2306	5/64	2 3/32	3 15/32	2 15/16	3.1	3.3	4.0
P206D1	Z(ZM)-UKP206ED1;HE2306X	C(CM)-UKP206ED1;HE2306X							
P207D1	Z(ZM)-UKP207D1;H2307X	C(CM)-UKP207D1;H2307X	3	60	99	80	1.7	1.8	2.1
P207D1	Z(ZM)-UKP207SD1;HS2307	C(CM)-UKP207SD1;HS2307	1/8	2 3/8	3 29/32	3 5/32	3.7	4.0	4.6
P208D1	Z(ZM)-UKP208D1;H2308X	C(CM)-UKP208D1;H2308X	3	69	105	90	2.0	2.2	2.8
P208D1	Z(ZM)-UKP208ED1;HE2308X	C(CM)-UKP208ED1;HE2308X	1/8	2 23/32	4 1/8	3 11/32	4.4	4.9	6.2
P208D1	Z(ZM)-UKP208SD1;HS2308X	C(CM)-UKP208SD1;HS2308X							
P209D1	Z(ZM)-UKP209D1;H2309X	C(CM)-UKP209D1;H2309X	3	69	113	95	2.3	2.5	3.3
P209D1	Z(ZM)-UKP209AD1;HA2309	C(CM)-UKP209AD1;HA2309							
P209D1	Z(ZM)-UKP209ED1;HE2309X	C(CM)-UKP209ED1;HE2309X	1/8	2 23/32	4 7/16	3 3/4	5.1	5.5	7.3
P209D1	Z(ZM)-UKP209SD1;HS2309X	C(CM)-UKP209SD1;HS2309X							
P210D1	Z(ZM)-UKP210D1;H2310X	C(CM)-UKP210D1;H2310X	3	76	119	100	2.9	3.0	3.9
P210D1	Z(ZM)-UKP210SD1;HS2310	C(CM)-UKP210SD1;HS2310							
P210D1	Z(ZM)-UKP210AD1;HA2310	C(CM)-UKP210AD1;HA2310	1/8	3	4 11/16	3 15/16	6.4	6.6	8.6
P210D1	Z(ZM)-UKP210ED1;HE2310X	C(CM)-UKP210ED1;HE2310X							
P211D1	Z(ZM)-UKP211D1;H2311X	C(CM)-UKP211D1;H2311X	4	77	130	100	3.6	3.7	4.8
P211D1	Z(ZM)-UKP211SD1;HS2311	C(CM)-UKP211SD1;HS2311							
P211D1	Z(ZM)-UKP211AD1;HA2311	C(CM)-UKP211AD1;HA2311	5/32	3 1/32	5 1/8	3 15/16	7.9	8.2	11
P211D1	Z(ZM)-UKP211ED1;HE2311XY	C(CM)-UKP211ED1;HE2311XY							
P212D1	Z(ZM)-UKP212D1;H2312X	C(CM)-UKP212D1;H2312X	4	89	143	115	4.7	5.1	6.2
P212D1	Z(ZM)-UKP212SD1;HS2312	C(CM)-UKP212SD1;HS2312	5/32	3 1/2	5 5/8	4 17/32	10	11	14

Notes (1) These numbers indicate relubricatable type. If maintenance free type is needed, please order without suffix "D1".
(2) Adapter number with suffix "X" means a narrow slot type adapter sleeve.
In this case the lock washer with the straight inner prong should be used.
(2) For HE2311XY, screw thread pitch different from the standard is applied, because of the thin thread section of sleeve.
To distinguish it, a suffix "Y" is added.

Remarks Please refer to page **A21** for size of grease fitting.

Pillow block unit, cast housing
Adapter type

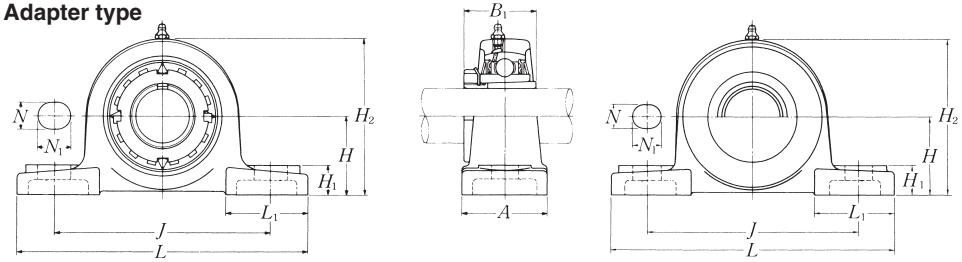

Pressed steel dust cover type
Open end **Z-UKP···D1**
Closed end **ZM-UKP···D1**

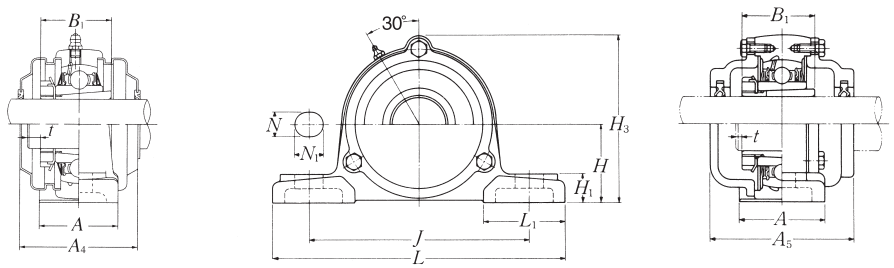

Cast dust cover type
Open end **C-UKP···D1**
Closed end **CM-UKP···D1**

Shaft dia. mm / inch	Unit number (1)(2)	Nominal dimensions mm / inch H	L	J	A	N	N_1	H_1	H_2	L_1	B_1	Bolt size mm / inch	Bearing number
60	UKP213D1;H2313X	76.2	265	203	70	25	28	27	151	77	65	M20	UK213D1;H2313X
2 3/16	UKP213D1;HA2313												UK213D1;HA2313
2 1/4	UKP213D1;HE2313X	3	10 7/16	8	2 3/4	31/32	1 3/32	1 1/16	5 15/16	3 1/32	2.559	3/4	UK213D1;HE2313X
2 3/8	UKP213D1;HS2313X												UK213D1;HS2313X
65	UKP215D1;H2315X	82.6	275	217	74	25	28	28	163	80	73	M20	UK215D1;H2315X
2 7/16	UKP215D1;HA2315	3 1/4	10 13/16	8 17/32	2 29/32	31/32	1 3/32	1 3/32	6 13/32	3 5/32	2.874	3/4	UK215D1;HA2315
2 1/2	UKP215D1;HE2315X												UK215D1;HE2315X
70	UKP216D1;H2316X	88.9	292	232	78	25	28	30	175	85	78	M20	UK216D1;H2316X
2 11/16	UKP216D1;HA2316	3 1/2	11 1/2	9 1/8	3 1/16	31/32	1 3/32	1 3/16	6 7/8	3 11/32	3.071	3/4	UK216D1;HA2316
2 3/4	UKP216D1;HE2316X												UK216D1;HE2316X
75	UKP217D1;H2317X	95.2	310	247	83	25	28	32	187	85	82	M20	UK217D1;H2317X
2 15/16	UKP217D1;HA2317X	3 3/4	12 7/32	9 23/32	3 9/32	31/32	1 3/32	1 1/4	7 3/8	3 11/32	3.228	3/4	UK217D1;HA2317X
3	UKP217D1;HE2317X												UK217D1;HE2317X
80	UKP218D1;H2318X	101.6	327	262	88	27	30	33	200	90	86	M22	UK218D1;H2318X
3 3/16	UKP218D1;HA2318X	4	12 7/8	10 5/16	3 15/32	1 1/16	1 3/16	1 5/16	7 7/8	3 17/32	3.386	7/8	UK218D1;HA2318X

Notes (1) These numbers indicate relubricatable type. If maintenance free type is needed, please order without suffix "D1".
(2) Adapter number with suffix "X" means a narrow slot type adapter sleeve.
In this case the lock washer with the straight inner prong should be used.
Remarks Please refer to page **A21** for size of grease fitting.

Housing number	Unit number pressed steel dust cover type	Unit number cast dust cover type	Nominal dimensions mm / inch t max.	A_4	H_3	A_5	Mass of unit kg / lb UKP	Z(ZM)	C(CM)
P213D1	Z(ZM)-UKP213D1;H2313X	C(CM)-UKP213D1;H2313X	4	91	155	120	5.7	5.9	7.6
P213D1	Z(ZM)-UKP213AD1;HA2313	C(CM)-UKP213AD1;HA2313							
P213D1	Z(ZM)-UKP213ED1;HE2313X	C(CM)-UKP213ED1;HE2313X	5/32	3 19/32	6 3/32	4 23/32	13	13	17
P213D1	Z(ZM)-UKP213SD1;HS2313X	C(CM)-UKP213SD1;HS2313X							
P215D1	–	C(CM)-UKP215D1;H2315X	4	–	168	135	7.5	–	10
P215D1	–	C(CM)-UKP215AD1;HA2315	5/32	–	6 5/8	5 5/16	17	–	22
P215D1		C(CM)-UKP215ED1;HE2315X							
P216D1	–	C(CM)-UKP216D1;H2316X	4	–	181	145	9.2	–	12
P216D1	–	C(CM)-UKP216AD1;HA2316	5/32	–	7 1/8	5 23/32	20	–	26
P216D1		C(CM)-UKP216ED1;HE2316X							
P217D1	–	C(CM)-UKP217D1;H2317X	5	–	191	155	11	–	14
P217D1	–	C(CM)-UKP217AD1;HA2317X	13/64	–	7 17/32	6 3/32	24	–	31
P217D1		C(CM)-UKP217ED1;HE2317X							
P218D1	–	C(CM)-UKP218D1;H2318X	5	–	204	165	13	–	16
P218D1	–	C(CM)-UKP218AD1;HA2318X	13/64	–	8 1/32	6 1/2	29	–	35

Pillow block unit, cast housing
Adapter type

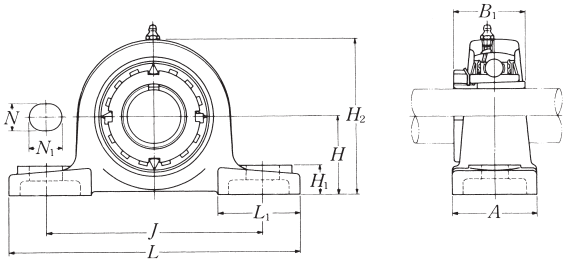

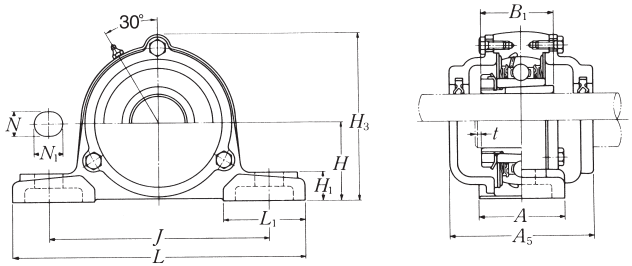

Cast dust cover type
Open end **C-UKP···D1**
Closed end **CM-UKP···D1**

Shaft dia. mm / inch	Unit number (1)(2)(3)	Nominal dimensions mm / inch H	L	J	A	N	N_1	H_1	H_2	L_1	B_1	Bolt size mm / inch
20	UKP305D1;H2305X	45	175	132	45	17	20	15	85	54	35	M14
3/4	UKP305D1;HE2305	1 49/64	6 7/8	5 3/16	1 25/32	21/32	25/32	19/32	3 11/32	2 1/8	1.378	1/2
25	UKP306D1;H2306X	50	180	140	50	17	20	18	95	54	38	M14
7/8	UKP306D1;HS2306	1 31/32	7 3/32	5 1/2	1 31/32	21/32	25/32	23/32	3 3/4	2 1/8	1.496	1/2
1	UKP306D1;HE2306X											
30	UKP307D1;H2307X	56	210	160	56	17	25	20	106	60	43	M14
1 1/8	UKP307D1;HS2307	2 13/64	8 9/32	6 5/16	2 7/32	21/32	31/32	25/32	4 3/16	2 3/8	1.693	1/2
35	UKP308D1;H2308X	60	220	170	60	17	27	22	116	60	46	M14
1 1/4	UKP308D1;HE2308X	2 23/64	8 21/32	6 11/16	2 3/8	21/32	1 1/16	7/8	4 9/16	2 3/8	1.811	1/2
1 3/8	UKP308D1;HS2308X											
40	UKP309D1;H2309X	67	245	190	67	20	30	24	129	65	50	M16
1 7/16	UKP309D1;HA2309											
1 1/2	UKP309D1;HE2309X	2 41/64	9 21/32	7 15/32	2 5/8	25/32	1 3/16	15/16	5 3/32	2 9/16	1.969	5/8
1 5/8	UKP309D1;HS2309X											
45	UKP310D1;H2310X	75	275	212	75	20	35	27	143	75	55	M16
1 5/8	UKP310D1;HS2310											
1 11/16	UKP310D1;HA2310	2 61/64	10 13/16	8 11/32	2 15/16	25/32	1 3/8	1 1/16	5 5/8	2 15/16	2.165	5/8
1 3/4	UKP310D1;HE2310X											
50	UKP311D1;H2311X	80	310	236	80	20	38	30	154	85	59	M16
1 7/8	UKP311D1;HS2311											
1 15/16	UKP311D1;HA2311	3 5/32	12 7/32	9 9/32	3 5/32	25/32	1 1/2	1 3/16	6 1/16	3 11/32	2.323	5/8
2	UKP311D1;HE2311XY											
55	UKP312D1;H2312X	85	330	250	85	25	38	32	165	95	62	M20
2 1/8	UKP312D1;HS2312	3 11/32	13	9 27/32	3 11/32	31/32	1 1/2	1 1/4	6 1/2	3 3/4	2.441	3/4

Notes (1) These numbers indicate relubricatable type. If maintenance free type is needed, please order without suffix "D1".
(2) Adapter number with suffix "X" means a narrow slot type adapter sleeve.
In this case the lock washer with the straight inner prong should be used.
(3) For HE2311XY, screw thread pitch different from the standard is applied, because of the thin thread section of sleeve.
To distinguish it, a suffix "Y" is added.

Remarks Please refer to page **A21** for size of grease fitting.

Bearing number	Housing number	Unit number cast dust cover type	Nominal dimensions mm / inch t max.	H_3	A_5	Mass of unit kg / lb UKP	C(CM)
UK305D1;H2305X	P305D1	C(CM)-UKP305D1;H2305X	2	91	80	1.4	1.9
UK305D1;HE2305	P305D1	C(CM)-UKP305ED1;HE2305	5/64	3 19/32	3 5/32	3.1	4.2
UK306D1;H2306X	P306D1	C(CM)-UKP306D1;H2306X	2	105	85	1.8	2.6
UK306D1;HS2306	P306D1	C(CM)-UKP306SD1;HS2306	5/64	4 1/8	3 11/32	4.0	5.7
UK306D1;HE2306X	P306D1	C(CM)-UKP306ED1;HE2306X					
UK307D1;H2307X	P307D1	C(CM)-UKP307D1;H2307X	3	115	95	2.6	3.3
UK307D1;HS2307	P307D1	C(CM)-UKP307SD1;HS2307	1/8	4 17/32	3 3/4	5.7	7.3
UK308D1;H2308X	P308D1	C(CM)-UKP308D1;H2308X	3	125	105	3.1	4.2
UK308D1;HE2308X	P308D1	C(CM)-UKP308ED1;HE2308X	1/8	4 29/32	4 1/8	6.8	9.3
UK308D1;HS2308X	P308D1	C(CM)-UKP308SD1;HS2308X					
UK309D1;H2309X	P309D1	C(CM)-UKP309D1;H2309X	3	140	110	4.1	5.6
UK309D1;HA2309	P309D1	C(CM)-UKP309AD1;HA2309					
UK309D1;HE2309X	P309D1	C(CM)-UKP309ED1;HE2309X	1/8	5 1/2	4 11/32	9.0	12
UK309D1;HS2309X	P309D1	C(CM)-UKP309SD1;HS2309X					
UK310D1;H2310X	P310D1	C(CM)-UKP310D1;H2310X	3	156	120	5.6	7.2
UK310D1;HS2310	P310D1	C(CM)-UKP310SD1;HS2310					
UK310D1;HA2310	P310D1	C(CM)-UKP310AD1;HA2310	1/8	6 5/32	4 23/32	12	16
UK310D1;HE2310X	P310D1	C(CM)-UKP310ED1;HE2310X					
UK311D1;H2311X	P311D1	C(CM)-UKP311D1;H2311X	4	166	125	7.3	9.0
UK311D1;HS2311	P311D1	C(CM)-UKP311SD1;HS2311					
UK311D1;HA2311	P311D1	C(CM)-UKP311AD1;HA2311	5/32	6 17/32	4 29/32	16	20
UK311D1;HE2311XY	P311D1	C(CM)-UKP311ED1;HE2311XY					
UK312D1;H2312X	P312D1	C(CM)-UKP312D1;H2312X	4	179	135	9.3	11
UK312D1;HS2312	P312D1	C(CM)-UKP312SD1;HS2312	5/32	7 1/16	5 5/16	21	24

Pillow block unit, cast housing
Adapter type

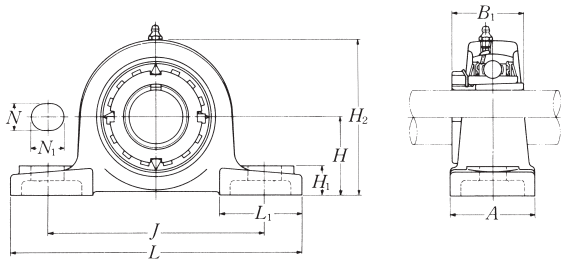

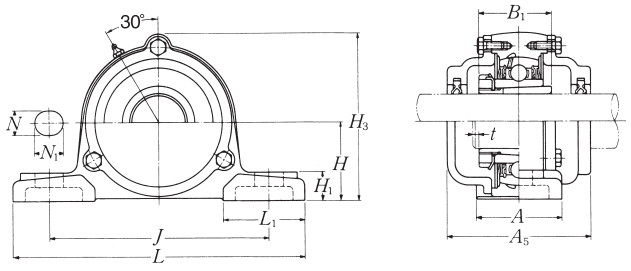

Cast dust cover type
Open end **C-UKP···D1**
Closed end **CM-UKP···D1**

Shaft dia. mm / inch	Unit number (1)(2)	Nominal dimensions mm / inch H	L	J	A	N	N_1	H_1	H_2	L_1	B_1	Bolt size mm / inch
60	UKP313D1;H2313X	90	340	260	90	25	38	33	176	105	65	M20
2 3/16	UKP313D1;HA2313											
2 1/4	UKP313D1;HE2313X	3 35/64	13 3/8	10 1/4	3 17/32	31/32	1 1/2	1 5/16	6 15/16	4 1/8	2.559	3/4
2 3/8	UKP313D1;HS2313X											
65	UKP315D1;H2315X	100	380	290	100	27	40	35	198	110	73	M22
2 7/16	UKP315D1;HA2315	3 15/16	14 31/32	11 13/32	3 15/16	1 1/16	1 9/16	1 3/8	7 25/32	4 11/32	2.874	7/8
2 1/2	UKP315D1;HE2315X											
70	UKP316D1;H2316X	106	400	300	110	27	40	40	210	110	78	M22
2 11/16	UKP316D1;HA2316	4 11/64	15 3/4	11 13/16	4 11/32	1 1/16	1 9/16	1 9/16	8 9/32	4 11/32	3.071	7/8
2 3/4	UKP316D1;HE2316X											
75	UKP317D1;H2317X	112	420	320	110	33	45	40	220	120	82	M27
2 15/16	UKP317D1;HA2317X	4 13/32	16 17/32	12 19/32	4 11/32	1 5/16	1 25/32	1 9/16	8 21/32	4 23/32	3.228	1
3	UKP317D1;HE2317X											
80	UKP318D1;H2318X	118	430	330	110	33	45	45	235	120	86	M27
3 3/16	UKP318D1;HA2318X	4 41/64	16 15/16	13	4 11/32	1 5/16	1 25/32	1 25/32	9 1/4	4 23/32	3.386	1
85	UKP319D1;H2319X	125	470	360	120	35	50	45	250	125	90	M30
3 1/4	UKP319D1;HE2319X	4 59/64	18 1/2	14 3/16	4 23/32	1 13/32	1 31/32	1 25/32	9 27/32	4 29/32	3.543	1 1/8
90	UKP320D1;H2320X	140	490	380	120	36	50	50	275	130	97	M30
3 7/16	UKP320D1;HA2320	5 33/64	19 9/32	14 31/32	4 23/32	1 13/32	1 31/32	1 31/32	10 13/16	5 1/8	3.819	1 1/8
3 1/2	UKP320D1;HE2320X											
100	UKP322D1;H2322X	150	520	400	140	40	55	55	300	135	105	M33
110	UKP324D1;H2324X	160	570	450	140	40	55	65	320	140	112	M33
115	UKP326D1;H2326	180	600	480	140	40	55	75	355	140	121	M33
125	UKP328D1;H2328	200	620	500	140	40	55	75	390	140	131	M33

Notes (1) These numbers indicate relubricatable type. If maintenance free type is needed, please order without suffix "D1".
(2) Adapter number with suffix "X" means a narrow slot type adapter sleeve.
In this case the lock washer with the straight inner prong should be used.
Remarks Please refer to page **A21** for size of grease fitting.

Bearing number	Housing number	Unit number cast dust cover type	Nominal dimensions mm / inch t max.	H_3	A_5	Mass of unit kg / lb UKP	C(CM)
UK313D1;H2313X	P313D1	C(CM)-UKP313D1;H2313X	4	190	140	10	12
UK313D1;HA2313	P313D1	C(CM)-UKP313AD1;HA2313					
UK313D1;HE2313X	P313D1	C(CM)-UKP313ED1;HE2313X	5/32	7 15/32	5 1/2	22	26
UK313D1;HS2313X	P313D1	C(CM)-UKP313SD1;HS2313X					
UK315D1;H2315X	P315D1	C(CM)-UKP315D1;H2315X	4	210	150	14	18
UK315D1;HA2315	P315D1	C(CM)-UKP315AD1;HA2315	5/32	8 9/32	5 29/32	31	40
UK315D1;HE2315X	P315D1	C(CM)-UKP315ED1;HE2315X					
UK316D1;H2316X	P316D1	C(CM)-UKP316D1;H2316X	4	221	155	17	21
UK316D1;HA2316	P316D1	C(CM)-UKP316AD1;HA2316	5/32	8 11/16	6 3/32	37	46
UK316D1;HE2316X	P316D1	C(CM)-UKP316ED1;HE2316X					
UK317D1;H2317X	P317D1	C(CM)-UKP317D1;H2317X	5	235	170	19	24
UK317D1;HA2317X	P317D1	C(CM)-UKP317AD1;HA2317X	13/64	9 1/4	6 11/16	42	53
UK317D1;HE2317X	P317D1	C(CM)-UKP317ED1;HE2317X					
UK318D1;H2318X	P318D1	C(CM)-UKP318D1;H2318X	5	246	170	22	28
UK318D1;HA2318X	P318D1	C(CM)-UKP318AD1;HA2318X	13/64	9 11/16	6 11/16	49	62
UK319D1;H2319X	P319D1	C(CM)-UKP319D1;H2319X	5	258	180	27	33
UK319D1;HE2319X	P319D1	C(CM)-UKP319ED1;HE2319X	13/64	10 5/32	7 3/32	60	73
UK320D1;H2320X	P320D1	C(CM)-UKP320D1;H2320X	5	283	190	33	40
UK320D1;HA2320	P320D1	C(CM)-UKP320AD1;HA2320	13/64	11 5/32	7 15/32	73	88
UK320D1;HE2320X	P320D1	C(CM)-UKP320ED1;HE2320X					
UK322D1;H2322X	P322D1	C(CM)-UKP322D1;H2322X	5	313	200	43	53
UK324D1;H2324X	P324D1	C(CM)-UKP324D1;H2324X	5	335	215	50	67
UK326D1;H2326	P326D1	C(CM)-UKP326D1;H2326	6	375	225	69	86
UK328D1;H2328	P328D1	C(CM)-UKP328D1;H2328	6	407	235	84	101

Pillow block unit, cast housing
Adapter type

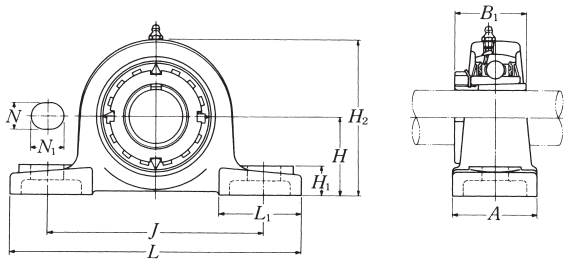

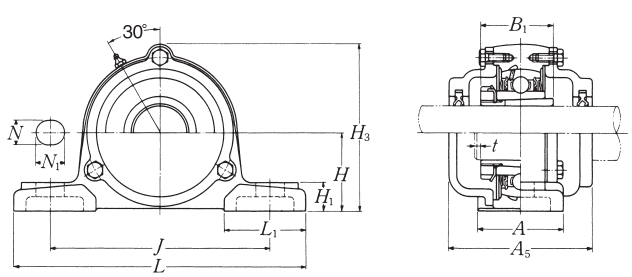

Cast dust cover type
Open end **C-UKP···D1**
Closed end **CM-UKP···D1**

Shaft dia. mm / inch	Unit number (1)(2)(3)	Nominal dimensions mm / inch H	L	J	A	N	N_1	H_1	H_2	L_1	B_1	Bolt size mm / inch
20	UKPX05D1;H2305X	44.4	159	119	51	17	20	18	85	50	35	M14
3/4	UKPX05D1;HE2305	1 3/4	6 1/4	4 11/16	2	21/32	25/32	23/32	3 11/32	1 31/32	1.378	1/2
25	UKPX06D1;H2306X	47.6	175	127	57	17	20	20	93	54	38	M14
7/8	UKPX06D1;HS2306	1 7/8	6 7/8	5	2 1/4	21/32	25/32	25/32	3 21/32	2 1/8	1.496	1/2
1	UKPX06D1;HE2306X											
30	UKPX07D1;H2307X	54	203	144	57	17	20	21	105	60	43	M14
1 1/8	UKPX07D1;HS2307	2 1/8	8	5 21/32	2 1/4	21/32	25/32	13/16	4 1/8	2 3/8	1.693	1/2
35	UKPX08D1;H2308X	58.7	222	156	67	20	23	26	111	65	46	M16
1 1/4	UKPX08D1;HE2308X	2 5/16	8 3/4	6 5/32	2 5/8	25/32	29/32	1 1/32	4 3/8	2 9/16	1.811	5/8
1 3/8	UKPX08D1;HS2308X											
40	UKPX09D1;H2309X	58.7	222	156	67	20	23	26	116	65	50	M16
1 7/16	UKPX09D1;HA2309											
1 1/2	UKPX09D1;HE2309X	2 5/16	8 3/4	6 5/32	2 5/8	25/32	29/32	1 1/32	4 9/16	2 9/16	1.969	5/8
1 5/8	UKPX09D1;HS2309X											
45	UKPX10D1;H2310X	63.5	241	171	73	20	23	27	126	70	55	M16
1 5/8	UKPX10D1;HS2310											
1 11/16	UKPX10D1;HA2310	2 1/2	9 1/2	6 23/32	2 7/8	25/32	29/32	1 1/16	4 31/32	2 3/4	2.165	5/8
1 3/4	UKPX10D1;HE2310X											
50	UKPX11D1;H2311X	69.8	260	184	79	25	28	30	137	75	59	M20
1 7/8	UKPX11D1;HS2311											
1 15/16	UKPX11D1;HA2311	2 3/4	10 1/4	7 1/4	3 1/8	31/32	1 3/32	1 3/16	5 13/32	2 15/16	2.323	3/4
2	UKPX11D1;HE2311XY											
55	UKPX12D1;H2312X	76.2	286	203	83	25	28	33	151	80	62	M20
2 1/8	UKPX12D1;HS2312	3	11 1/4	8	3 9/32	31/32	1 3/32	1 5/16	5 15/16	3 5/32	2.441	3/4

Notes (1) These numbers indicate relubricatable type. If maintenance free type is needed, please order without suffix "D1".
(2) Adapter number with suffix "X" means a narrow slot type adapter sleeve.
In this case the lock washer with the straight inner prong should be used.
(3) For HE2311XY, screw thread pitch different from the standard is applied, because of the thin thread section of sleeve.
To distinguish it, a suffix "Y" is added.

Remarks Please refer to page **A21** for size of grease fitting.

Bearing number	Housing number	Unit number cast dust cover type	Nominal dimensions mm / inch t max.	H_3	A_5	Mass of unit kg / lb UKP	C(CM)
UKX05D1;H2305X	PX05D1	C(CM)-UKPX05D1;H2305X	2	89	75	1.4	1.8
UKX05D1;HE2305	PX05D1	C(CM)-UKPX05ED1;HE2305	5/64	3 1/2	2 15/16	3.1	4.0
UKX06D1;H2306X	PX06D1	C(CM)-UKPX06D1;H2306X	2	99	80	1.7	2.2
UKX06D1;HS2306	PX06D1	C(CM)-UKPX06SD1;HS2306	5/64	3 29/32	3 5/32	3.7	4.9
UKX06D1;HE2306X	PX06D1	C(CM)-UKPX06ED1;HE2306X					
UKX07D1;H2307X	PX07D1	C(CM)-UKPX07D1;H2307X	3	110	90	2.5	3.3
UKX07D1;HS2307	PX07D1	C(CM)-UKPX07SD1;HS2307	1/8	4 11/32	3 17/32	5.5	7.3
UKX08D1;H2308X	PX08D1	C(CM)-UKPX08D1;H2308X	3	118	95	3.2	4.1
UKX08D1;HE2308X	PX08D1	C(CM)-UKPX08ED1;HE2308X	1/8	4 41/64	3 3/4	7.1	9.0
UKX08D1;HS2308X	PX08D1	C(CM)-UKPX08SD1;HS2308X					
UKX09D1;H2309X	PX09D1	C(CM)-UKPX09D1;H2309X	3	120	100	3.3	4.3
UKX09D1;HA2309	PX09D1	C(CM)-UKPX09AD1;HA2309					
UKX09D1;HE2309X	PX09D1	C(CM)-UKPX09ED1;HE2309X	1/8	4 23/32	3 15/16	7.3	9.5
UKX09D1;HS2309X	PX09D1	C(CM)-UKPX09SD1;HS2309X					
UKX10D1;H2310X	PX10D1	C(CM)-UKPX10D1;H2310X	3	130	100	4.2	5.4
UKX10D1;HS2310	PX10D1	C(CM)-UKPX10SD1;HS2310					
UKX10D1;HA2310	PX10D1	C(CM)-UKPX10AD1;HA2310	1/8	5 1/8	3 15/16	9.3	12
UKX10D1;HE2310X	PX10D1	C(CM)-UKPX10ED1;HE2310X					
UKX11D1;H2311X	PX11D1	C(CM)-UKPX11D1;H2311X	4	144	115	5.3	6.8
UKX11D1;HS2311	PX11D1	C(CM)-UKPX11SD1;HS2311					
UKX11D1;HA2311	PX11D1	C(CM)-UKPX11AD1;HA2311	5/32	5 21/32	4 17/32	12	15
UKX11D1;HE2311XY	PX11D1	C(CM)-UKPX11ED1;HE2311XY					
UKX12D1;H2312X	PX12D1	C(CM)-UKPX12D1;H2312X	4	155	120	6.8	8.6
UKX12D1;HS2312	PX12D1	C(CM)-UKPX12SD1;HS2312	5/32	6 3/32	4 23/32	15	19

Pillow block unit, cast housing
Adapter type

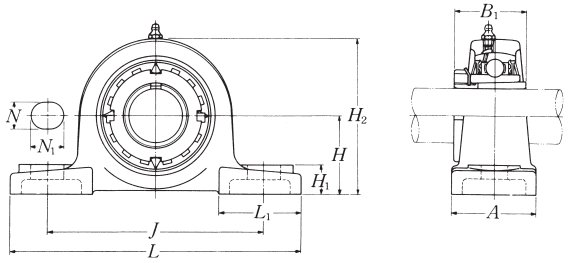

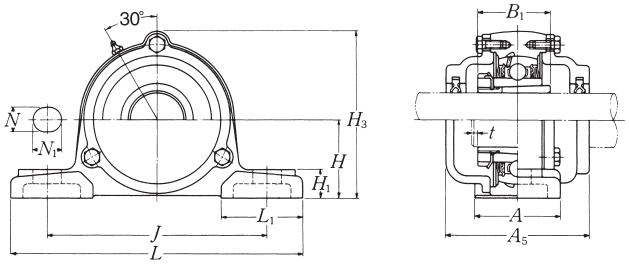

Cast dust cover type
Open end **C-UKP···D1**
Closed end **CM-UKP···D1**

Shaft dia. mm / inch	Unit number (1)(2)	Nominal dimensions mm inch H	L	J	A	N	N_1	H_1	H_2	L_1	B_1	Bolt size mm / inch
60	**UKPX13D1;H2313X**	76.2	286	203	83	25	28	33	154	80	65	M20
2 3/16	**UKPX13D1;HA2313**											
2 1/4	**UKPX13D1;HE2313X**	3	11 1/4	8	3 9/32	31/32	1 3/32	1 5/16	6 1/16	3 5/32	2.559	3/4
2 3/8	**UKPX13D1;HS2313X**											
65	**UKPX15D1;H2315X**	88.9	330	229	89	27	30	35	175	95	73	M22
2 7/16	**UKPX15D1;HA2315**	3 1/2	13	9 1/32	3 1/2	1 1/16	1 3/16	1 3/8	6 7/8	3 3/4	2.874	7/8
2 1/2	**UKPX15D1;HE2315X**											
70	**UKPX16D1;H2316X**	101.6	381	283	102	27	30	40	194	110	78	M22
2 11/16	**UKPX16D1;HA2316**	4	15	11 5/32	4 1/32	1 1/16	1 3/16	1 9/16	7 5/8	4 11/32	3.071	7/8
2 3/4	**UKPX16D1;HE2316X**											
75	**UKPX17D1;H2317X**	101.6	381	283	102	27	30	40	200	110	82	M22
2 15/16	**UKPX17D1;HA2317X**	4	15	11 5/32	4 1/32	1 1/16	1 3/16	1 9/16	7 7/8	4 11/32	3.228	7/8
3	**UKPX17D1;HE2317X**											
80	**UKPX18D1;H2318X**	101.6	381	283	111	27	30	40	206	110	86	M22
3 3/16	**UKPX18D1;HA2318X**	4	15	11 5/32	4 3/8	1 1/16	1 3/16	1 9/16	8 1/8	4 11/32	3.386	7/8
90	**UKPX20D1;H2320X**	127	432	337	121	33	36	45	244	125	97	M27

Notes (1) These numbers indicate relubricatable type. If maintenance free type is needed, please order without suffix "D1".
(2) Adapter number with suffix "X" means a narrow slot type adapter sleeve.
In this case the lock washer with the straight inner prong should be used.
Remarks Please refer to page **A21** for size of grease fitting.

Bearing number	Housing number	Unit number cast dust cover type	Nominal dimensions mm inch t max.	H_3	A_5	Mass of unit kg lb UKP	C(CM)
UKX13D1;H2313X	PX13D1	**C(CM)-UKPX13D1;H2313X**	4	159	135	6.9	9.2
UKX13D1;HA2313	PX13D1	**C(CM)-UKPX13AD1;HA2313**					
UKX13D1;HE2313X	PX13D1	**C(CM)-UKPX13ED1;HE2313X**	5/32	6 1/4	5 5/16	15	20
UKX13D1;HS2313X	PX13D1	**C(CM)-UKPX13SD1;HS2313X**					
UKX15D1;H2315X	PX15D1	**C(CM)-UKPX15D1;H2315X**	4	181	145	10	13
UKX15D1;HA2315	PX15D1	**C(CM)-UKPX15AD1;HA2315**	5/32	7 1/8	5 23/32	22	29
UKX15D1;HE2315X	PX15D1	**C(CM)-UKPX15ED1;HE2315X**					
UKX16D1;H2316X	PX16D1	**C(CM)-UKPX16D1;H2316X**	4	198	155	14	17
UKX16D1;HA2316	PX16D1	**C(CM)-UKPX16AD1;HA2316**	5/32	7 25/32	6 3/32	31	37
UKX16D1;HE2316X	PX16D1	**C(CM)-UKPX16ED1;HE2316X**					
UKX17D1;H2317X	PX17D1	**C(CM)-UKPX17D1;H2317X**	5	204	165	15	18
UKX17D1;HA2317X	PX17D1	**C(CM)-UKPX17AD1;HA2317X**	13/64	8 1/32	6 1/2	33	40
UKX17D1;HE2317X	PX17D1	**C(CM)-UKPX17ED1;HE2317X**					
UKX18D1;H2318X	PX18D1	**C(CM)-UKPX18D1;H2318X**	5	208	180	16	20
UKX18D1;HA2318X	PX18D1	**C(CM)-UKPX18AD1;HA2318**	13/64	8 3/16	7 3/32	35	44
UKX20D1;H2320X	PX20D1	**C(CM)-UKPX20D1;H2320X**	5	244	195	24	28

Square flanged unit, cast housing
Adapter type

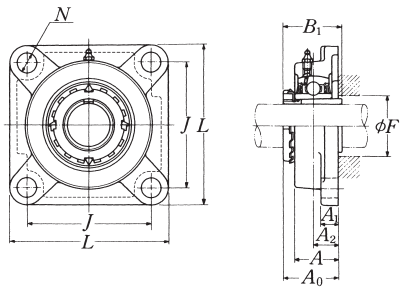

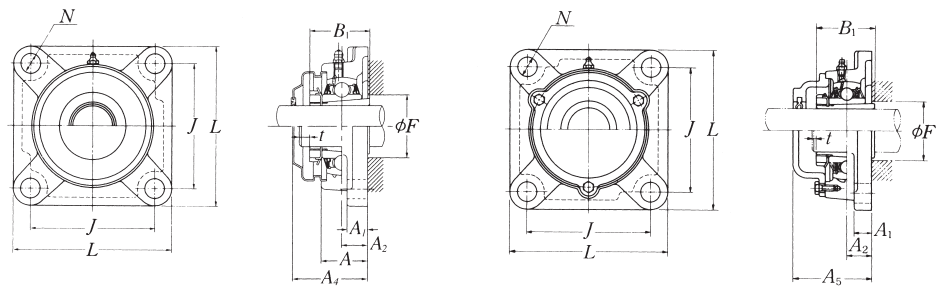

Pressed steel dust cover type
Open end **Z-UKF···D1**
Closed end **ZM-UKF···D1**

Cast dust cover type
Open end **C-UKF···D1**
Closed end **CM-UKF···D1**

Shaft dia. mm / inch	Unit number (1)(2)(3)	Nominal dimensions mm / inch L	J	A_2	A_1	A	N	A_0	B_1	F min.	Bolt size mm / inch	Bearing number
20	UKF205D1;H2305X	95	70	16	13	27	12	35.5	35	30	M10	UK205D1;H2305X
3/4	UKF205D1;HE2305	3 3/4	2 3/4	5/8	1/2	1 1/16	15/32	1 25/64	1.378	1 3/16	3/8	UK205D1;HE2305
25	UKF206D1;H2306X	108	83	18	13	31	12	39	38	36	M10	UK206D1;H2306X
7/8	UKF206D1;HS2306	4 1/4	3 17/64	45/64	1/2	1 7/32	15/32	1 17/32	1.496	1 13/32	3/8	UK206D1;HS2306
1	UKF206D1;HE2306X											UK206D1;HE2306X
30	UKF207D1;H2307X	117	92	19	15	34	14	42.5	43	40	M12	UK207D1;H2307X
1 1/8	UKF207D1;HS2307	4 19/32	3 5/8	3/4	19/32	1 11/32	35/64	1 43/64	1.693	1 9/16	7/16	UK207D1;HS2307
35	UKF208D1;H2308X	130	102	21	15	36	16	46.5	46	46	M14	UK208D1;H2308X
1 1/4	UKF208D1;HE2308X	5 1/8	4 1/64	53/64	19/32	1 13/32	5/8	1 53/64	1.811	1 13/16	1/2	UK208D1;HE2308X
1 3/8	UKF208D1;HS2308X											UK208D1;HS2308X
40	UKF209D1;H2309X	137	105	22	16	38	16	48.5	50	52	M14	UK209D1;H2309X
1 7/16	UKF209D1;HA2309											UK209D1;HA2309
1 1/2	UKF209D1;HE2309X	5 13/32	4 9/64	55/64	5/8	1 1/2	5/8	1 29/32	1.969	2 1/16	1/2	UK209D1;HE2309X
1 5/8	UKF209D1;HS2309X											UK209D1;HS2309X
45	UKF210D1;H2310X	143	111	22	16	40	16	50	55	57	M14	UK210D1;H2310X
1 5/8	UKF210D1;HS2310											UK210D1;HS2310
1 11/16	UKF210D1;HA2310	5 5/8	4 3/8	55/64	5/8	1 9/16	5/8	1 31/32	2.165	2 1/4	1/2	UK210D1;HA2310
1 3/4	UKF210D1;HE2310X											UK210D1;HE2310X
50	UKF211D1;H2311X	162	130	25	18	43	19	54.5	59	64	M16	UK211D1;H2311X
1 7/8	UKF211D1;HS2311											UK211D1;HS2311
1 15/16	UKF211D1;HA2311	6 3/8	5 1/8	63/64	23/32	1 11/16	3/4	2 9/64	2.323	2 17/32	5/8	UK211D1;HA2311
2	UKF211D1;HE2311XY											UK211D1;HE2311XY
55	UKF212D1;H2312X	175	143	29	18	48	19	61	62	69	M16	UK212D1;H2312X
2 1/8	UKF212D1;HS2312	6 7/8	5 5/8	1 9/64	23/32	1 7/8	3/4	2 13/32	2.441	2 23/32	5/8	UK212D1;HS2312

Housing number	Unit number (4) pressed steel dust cover type	Unit number (4) cast dust cover type	Nominal dimensions mm / inch t max.	A_4	A_5	Mass of unit kg / lb UKF	Z(ZM)	C(CM)
F205D1	Z(ZM)-UKF205D1;H2305X	C(CM)-UKF205D1;H2305X	2	40	51	0.8	0.8	1.0
F205D1	Z(ZM)-UKF205ED1;HE2305	C(CM)-UKF205ED1;HE2305	5/64	1 19/32	2	1.8	1.8	2.2
F206D1	Z(ZM)-UKF206D1;H2306X	C(CM)-UKF206D1;H2306X	2	45	56	1.1	1.1	1.3
F206D1	Z(ZM)-UKF206SD1;HS2306	C(CM)-UKF206SD1;HS2306	5/64	1 3/4	2 7/32	2.4	2.4	2.9
F206D1	Z(ZM)-UKF206ED1;HE2306X	C(CM)-UKF206ED1;HE2306X						
F207D1	Z(ZM)-UKF207D1;H2307X	C(CM)-UKF207D1;H2307X	3	49	59	1.6	1.6	1.9
F207D1	Z(ZM)-UKF207SD1;HS2307	C(CM)-UKF207SD1;HS2307	1/8	1 15/16	2 5/16	3.5	3.5	4.2
F208D1	Z(ZM)-UKF208D1;H2308X	C(CM)-UKF208D1;H2308X	3	56	66	1.8	1.9	2.4
F208D1	Z(ZM)-UKF208ED1;HE2308X	C(CM)-UKF208ED1;HE2308X	1/8	2 3/16	2 19/32	4.0	4.2	5.3
F208D1	Z(ZM)-UKF208SD1;HS2308X	C(CM)-UKF208SD1;HS2308X						
F209D1	Z(ZM)-UKF209D1;H2309X	C(CM)-UKF209D1;H2309X	3	57	70	2.3	2.3	2.8
F209D1	Z(ZM)-UKF209AD1;HA2309	C(CM)-UKF209AD1;HA2309						
F209D1	Z(ZM)-UKF209ED1;HE2309X	C(CM)-UKF209ED1;HE2309X	1/8	2 1/4	2 3/4	5.1	5.1	6.2
F209D1	Z(ZM)-UKF209SD1;HS2309X	C(CM)-UKF209SD1;HS2309X						
F210D1	Z(ZM)-UKF210D1;H2310X	C(CM)-UKF210D1;H2310X	3	60	72	2.6	2.7	3.2
F210D1	Z(ZM)-UKF210SD1;HS2310	C(CM)-UKF210SD1;HS2310						
F210D1	Z(ZM)-UKF210AD1;HA2310	C(CM)-UKF210AD1;HA2310	1/8	2 3/8	2 27/32	5.7	6.0	7.1
F210D1	Z(ZM)-UKF210ED1;HE2310X	C(CM)-UKF210ED1;HE2310X						
F211D1	Z(ZM)-UKF211D1;H2311X	C(CM)-UKF211D1;H2311X	4	64	75	3.5	3.6	4.3
F211D1	Z(ZM)-UKF211SD1;HS2311	C(CM)-UKF211SD1;HS2311						
F211D1	Z(ZM)-UKF211AD1;HA2311	C(CM)-UKF211AD1;HA2311	5/32	2 1/2	2 15/16	7.7	7.9	9.5
F211D1	Z(ZM)-UKF211ED1;HE2311XY	C(CM)-UKF211ED1;HE2311XY						
F212D1	Z(ZM)-UKF212D1;H2312X	C(CM)-UKF212D1;H2312X	4	74	86	4.0	4.2	5.0
F212D1	Z(ZM)-UKF212SD1;HS2312	C(CM)-UKF212SD1;HS2312	5/32	2 29/32	3 3/8	8.8	9.3	11

Notes (1) These numbers indicate relubricatable type. If maintenance free type is needed, please order without suffix "D1".
(2) Adapter number with suffix "X" means a narrow slot type adapter sleeve.
In this case the lock washer with the straight inner prong should be used.
(3) For HE2311XY, screw thread pitch different from the standard is applied, because of the thin thread section of sleeve.
To distinguish it, a suffix "Y" is added.
(4) If the inch series housing units with dust cover are ordered with a closed end, the suffixes E, S or A are not included.
Example: ZM-UKF205D1;HE2305

Remarks Please refer to page **A21** for size of grease fitting.

Square flanged unit, cast housing
Adapter type

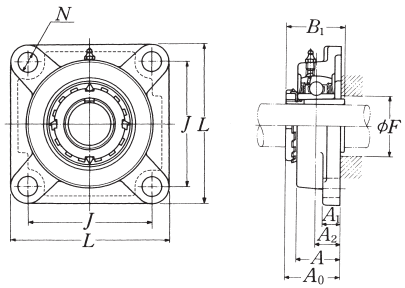

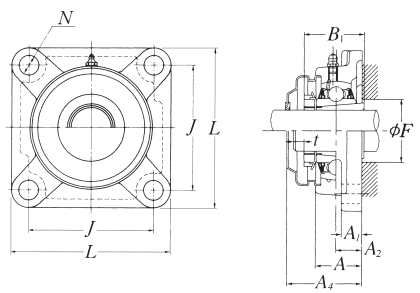

Pressed steel dust cover type
Open end **Z-UKF···D1**
Closed end **ZM-UKF···D1**

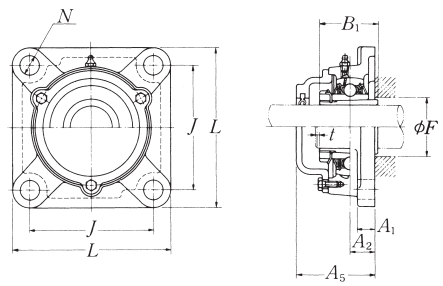

Cast dust cover type
Open end **C-UKF···D1**
Closed end **CM-UKF···D1**

Shaft dia. mm / inch	Unit number (1)(2)	Nominal dimensions mm inch L	J	A_2	A_1	A	N	A_0	B_1	F min.	Bolt size mm / inch	Bearing number
60	UKF213D1;H2313X	187	149	30	22	50	19	64	65	74	M16	UK213D1;H2313X
2 3/16	UKF213D1;HA2313											UK213D1;HA2313
2 1/4	UKF213D1;HE2313X	7 3/8	5 55/64	1 3/16	7/8	1 31/32	3/4	2 33/64	2.559	2 29/32	5/8	UK213D1;HE2313X
2 3/8	UKF213D1;HS2313X											UK213D1;HS2313X
65	UKF215D1;H2315X	200	159	34	22	56	19	71	73	84	M16	UK215D1;H2315X
2 7/16	UKF215D1;HA2315	7 7/8	6 17/64	1 11/32	7/8	2 7/32	3/4	2 51/64	2.874	3 5/16	5/8	UK215D1;HA2315
2 1/2	UKF215D1;HE2315X											UK215D1;HE2315X
70	UKF216D1;H2316X	208	165	34	22	58	23	73.5	78	90	M20	UK216D1;H2316X
2 11/16	UKF216D1;HA2316	8 3/16	6 1/2	1 11/32	7/8	2 9/32	29/32	2 57/64	3.071	3 17/32	3/4	UK216D1;HA2316
2 3/4	UKF216D1;HE2316X											UK216D1;HE2316X
75	UKF217D1;H2317X	220	175	36	24	63	23	77	82	95	M20	UK217D1;H2317X
2 15/16	UKF217D1;HA2317X	8 21/32	6 57/64	1 27/64	15/16	2 15/32	29/32	3 1/32	3.228	3 3/4	3/4	UK217D1;HA2317X
3	UKF217D1;HE2317X											UK217D1;HE2317X
80	UKF218D1;H2318X	235	187	40	24	68	23	81.5	86	102	M20	UK218D1;H2318X
3 3/16	UKF218D1;HA2318X	9 1/4	7 23/64	1 37/64	15/16	2 11/16	29/32	3 13/64	3.386	4 1/32	3/4	UK218D1;HA2318X

Notes (1) These numbers indicate relubricatable type. If maintenance free type is needed, please order without suffix "D1".
(2) Adapter number with suffix "X" means a narrow slot type adapter sleeve.
In this case the lock washer with the straight inner prong should be used.
(3) If the inch series housing units with dust cover are ordered with a closed end, the suffixes E, S or A are not included.
Example: ZM-UKF205D1;HE2305

Remarks Please refer to page **A21** for size of grease fitting.

Housing number	Unit number (3) pressed steel dust cover type	Unit number (3) cast dust cover type	Nominal dimensions mm inch t max.	A_4	A_5	Mass of unit kg lb UKF	Z(ZM)	C(CM)
F213D1	Z(ZM)-UKF213D1;H2313X	C(CM)-UKF213D1;H2313X	4	76	90	5.6	5.8	6.7
F213D1	Z(ZM)-UKF213AD1;HA2313	C(CM)-UKF213AD1;HA2313						
F213D1	Z(ZM)-UKF213ED1;HE2313X	C(CM)-UKF213ED1;HE2313X	5/32	3	3 17/32	12	13	15
F213D1	Z(ZM)-UKF213SD1;HS2313X	C(CM)-UKF213SD1;HS2313X						
F215D1	–	C(CM)-UKF215D1;H2315X	4	–	102	6.8	–	8.3
F215D1	–	C(CM)-UKF215AD1;HA2315	5/32	–	4 1/32	15	–	18
F215D1		C(CM)-UKF215ED1;HE2315X						
F216D1	–	C(CM)-UKF216D1;H2316X	4	–	106	8.3	–	10
F216D1	–	C(CM)-UKF216AD1;HA2316	5/32	–	4 3/16	18	–	22
F216D1		C(CM)-UKF216ED1;HE2316X						
F217D1	–	C(CM)-UKF217D1;H2317X	5	–	114	10	–	13
F217D1	–	C(CM)-UKF217AD1;HA2317X	13/64	–	4 1/2	22	–	29
F217D1		C(CM)-UKF217ED1;HE2317X						
F218D1	–	C(CM)-UKF218D1;H2318X	5	–	122	12	–	14
F218D1	–	C(CM)-UKF218AD1;HA2318X	13/64	–	4 13/16	26	–	31

Square flanged unit, cast housing
Adapter type

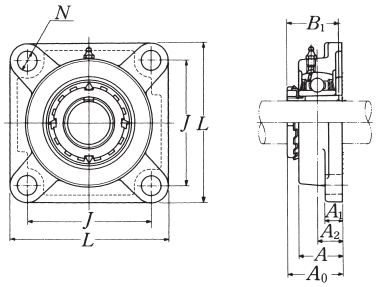

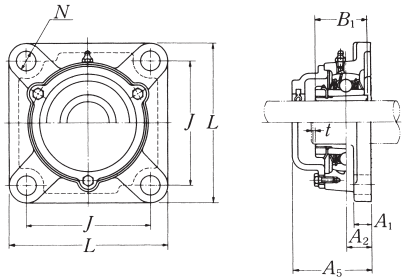

Cast dust cover type
Open end **C-UKF···D1**
Closed end **CM-UKF···D1**

Shaft dia. mm / inch	Unit number (1)(2)(3)	Nominal dimensions mm / inch L	J	A_2	A_1	A	N	A_0	B_1	Bolt size mm / inch
20	UKF305D1;H2305X	110	80	16	13	29	16	37	35	M14
3/4	UKF305D1;HE2305	4 11/32	3 5/32	5/8	1/2	1 5/32	5/8	1 29/64	1.378	1/2
25	UKF306D1;H2306X	125	95	18	15	32	16	40.5	38	M14
7/8	UKF306D1;HS2306	4 29/32	3 47/64	45/64	19/32	1 1/4	5/8	1 19/32	1.496	1/2
1	UKF306D1;HE2306X									
30	UKF307D1;H2307X	135	100	20	16	36	19	45.5	43	M16
1 1/8	UKF307D1;HS2307	5 5/16	3 15/16	25/32	5/8	1 13/32	3/4	1 51/64	1.693	5/8
35	UKF308D1;H2308X	150	112	23	17	40	19	50	46	M16
1 1/4	UKF308D1;HE2308X	5 29/32	4 13/32	29/32	21/32	1 9/16	3/4	1 31/32	1.811	5/8
1 3/8	UKF308D1;HS2308X									
40	UKF309D1;H2309X	160	125	25	18	44	19	54.5	50	M16
1 7/16	UKF309D1;HA2309									
1 1/2	UKF309D1;HE2309X	6 5/16	4 59/64	63/64	23/32	1 23/32	3/4	2 9/64	1.969	5/8
1 5/8	UKF309D1;HS2309X									
45	UKF310D1;H2310X	175	132	28	19	48	23	60.5	55	M20
1 5/8	UKF310D1;HS2310									
1 11/16	UKF310D1;HA2310	6 7/8	5 13/64	1 7/64	3/4	1 7/8	29/32	2 3/8	2.165	3/4
1 3/4	UKF310D1;HE2310X									
50	UKF311D1;H2311X	185	140	30	20	52	23	64	59	M20
1 7/8	UKF311D1;HS2311									
1 15/16	UKF311D1;HA2311	7 9/32	5 33/64	1 3/16	25/32	2 1/16	29/32	2 33/64	2.323	3/4
2	UKF311D1;HE2311XY									
55	UKF312D1;H2312X	195	150	33	22	56	23	69.5	62	M20
2 1/8	UKF312D1;HS2312	7 11/16	5 29/32	1 19/64	7/8	2 7/32	29/32	2 47/64	2.441	3/4

Notes (1) These numbers indicate relubricatable type. If maintenance free type is needed, please order without suffix "D1".
(2) Adapter number with suffix "X" means a narrow slot type adapter sleeve.
In this case the lock washer with the straight inner prong should be used.
(3) For HE2311XY, screw thread pitch different from the standard is applied, because of the thin thread section of sleeve.
To distinguish it, a suffix "Y" is added.
(4) If the inch series housing units with dust cover are ordered with a closed end, the suffixes E, S or A are not included.
Example: CM-UKF305D1;HE2305

Remarks Please refer to page **A21** for size of grease fitting.

Bearing number	Housing number	Unit number (4) cast dust cover type	Nominal dimensions mm / inch t max.	A_5	Mass of unit kg / lb UKF	C(CM)
UK305D1;H2305X	F305D1	C(CM)-UKF305D1;H2305X	2	56	1.1	1.5
UK305D1;HE2305	F305D1	C(CM)-UKF305ED1;HE2305	5/64	2 7/32	2.4	3.3
UK306D1;H2306X	F306D1	C(CM)-UKF306D1;H2306X	2	60	1.7	2.1
UK306D1;HS2306	F306D1	C(CM)-UKF306SD1;HS2306	5/64	2 3/8	3.7	4.6
UK306D1;HE2306X	F306D1	C(CM)-UKF306ED1;HE2306X				
UK307D1;H2307X	F307D1	C(CM)-UKF307D1;H2307X	3	68	2.1	2.7
UK307D1;HS2307	F307D1	C(CM)-UKF307SD1;HS2307	1/8	2 11/16	4.6	6.0
UK308D1;H2308X	F308D1	C(CM)-UKF308D1;H2308X	3	76	2.8	3.5
UK308D1;HE2308X	F308D1	C(CM)-UKF308ED1;HE2308X	1/8	3	6.2	7.7
UK308D1;HS2308X	F308D1	C(CM)-UKF308SD1;HS2308X				
UK309D1;H2309X	F309D1	C(CM)-UKF309D1;H2309X	3	80	3.4	4.4
UK309D1;HA2309	F309D1	C(CM)-UKF309AD1;HA2309				
UK309D1;HE2309X	F309D1	C(CM)-UKF309ED1;HE2309X	1/8	3 5/32	7.5	9.7
UK309D1;HS2309X	F309D1	C(CM)-UKF309SD1;HS2309X				
UK310D1;H2310X	F310D1	C(CM)-UKF310D1;H2310X	3	88	4.5	5.9
UK310D1;HS2310	F310D1	C(CM)-UKF310SD1;HS2310				
UK310D1;HA2310	F310D1	C(CM)-UKF310AD1;HA2310	1/8	3 15/32	9.9	13
UK310D1;HE2310X	F310D1	C(CM)-UKF310ED1;HE2310X				
UK311D1;H2311X	F311D1	C(CM)-UKF311D1;H2311X	4	92	5.3	6.8
UK311D1;HS2311	F311D1	C(CM)-UKF311SD1;HS2311				
UK311D1;HA2311	F311D1	C(CM)-UKF311AD1;HA2311	5/32	3 5/8	12	15
UK311D1;HE2311XY	F311D1	C(CM)-UKF311ED1;HE2311XY				
UK312D1;H2312X	F312D1	C(CM)-UKF312D1;H2312X	4	100	6.3	7.9
UK312D1;HS2312	F312D1	C(CM)-UKF312SD1;HS2312	5/32	3 15/16	14	17

Squiare flanged unit, cast housing
Adapter type

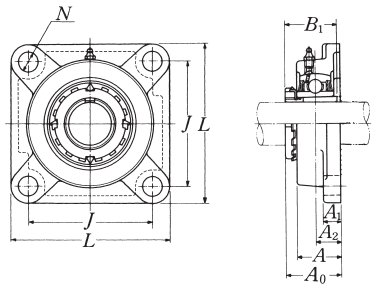

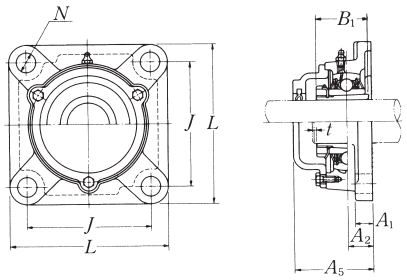

Cast dust cover type
Open end **C-UKF···D1**
Closed end **CM-UKF···D1**

Shaft dia. mm inch	Unit number (1)(2)	Nominal dimensions mm inch L	J	A_2	A_1	A	N	A_0	B_1	Bolt size mm inch
60	UKF313D1;H2313X	208	166	33	22	58	23	71.5	65	M20
2 3/16	UKF313D1;HA2313									
2 1/4	UKF313D1;HE2313X	8 3/16	6 17/32	1 19/64	7/8	2 9/32	29/32	2 13/16	2.559	3/4
2 3/8	UKF313D1;HS2313X									
65	UKF315D1;H2315X	236	184	39	25	66	25	81.5	73	M22
2 7/16	UKF315D1;HA2315	9 9/32	7 1/4	1 17/32	31/32	2 19/32	63/64	3 13/64	2.874	7/8
2 1/2	UKF315D1;HE2315X									
70	UKF316D1;H2316X	250	196	38	27	68	31	84	78	M27
2 11/16	UKF316D1;HA2316	9 27/32	7 23/32	1 1/2	1 1/16	2 11/16	1 7/32	3 5/16	3.071	1
2 3/4	UKF316D1;HE2316X									
75	UKF317D1;H2317X	260	204	44	27	74	31	92	82	M27
2 15/16	UKF317D1;HA2317X	10 1/4	8 1/32	1 47/64	1 1/16	2 29/32	1 7/32	3 5/8	3.228	1
3	UKF317D1;HE2317X									
80	UKF318D1;H2318X	280	216	44	30	76	35	94	86	M30
3 13/16	UKF318D1;HA2318X	11 1/32	8 1/2	1 47/64	1 3/16	3	1 3/8	3 45/64	3.386	1 1/8
85	UKF319D1;H2319X	290	228	59	30	94	35	111.5	90	M30
3 1/4	UKF319D1;HE2319X	11 13/32	8 21/32	2 21/64	1 3/16	3 11/16	1 3/8	4 25/64	3.543	1 1/8
90	UKF320D1;H2320X	310	242	59	32	94	38	115.5	97	M33
3 7/16	UKF320D1;HA2320	12 7/32	9 17/32	2 21/64	1 1/4	3 11/16	1 1/2	4 35/64	3.819	1 1/4
3 1/2	UKF320D1;HE2320X									
100	UKF322D1;H2322X	340	266	60	35	96	41	121	105	M36
110	UKF324D1;H2324	370	290	65	40	110	41	130	112	M36
115	UKF326D1;H2326	410	320	65	45	115	41	133	121	M36
125	UKF328D1;H2328	450	350	75	55	125	41	146.5	131	M36

Notes (1) These numbers indicate relubricatable type. If maintenance free type is needed, please order without suffix "D1".
(2) Adapter number with suffix "X" means a narrow slot type adapter sleeve.
In this case the lock washer with the straight inner prong should be used.
(3) If the inch series housing units with dust cover are ordered with a closed end, the suffixes E, S or A are not included.
Example: CM-UKF305D1;HE2305

Remarks Please refer to page **A21** for size of grease fitting.

Bearing number	Housing number	Unit number (3) cast dust cover type	Nominal dimensions mm inch t max.	A_5	Mass of unit kg lb UKF	C(CM)
UK313D1;H2313X	F313D1	C(CM)-UKF313D1;H2313X	4	103	7.8	9.6
UK313D1;HA2313	F313D1	C(CM)-UKF313AD1;HA2313				
UK313D1;HE2313X	F313D1	C(CM)-UKF313ED1;HE2313X	5/32	4 1/16	17	21
UK313D1;HS2313X	F313D1	C(CM)-UKF313SD1;HS2313X				
UK315D1;H2315X	F315D1	C(CM)-UKF315D1;H2315X	4	114	11	13
UK315D1;HA2315	F315D1	C(CM)-UKF315AD1;HA2315	5/32	4 1/2	24	29
UK315D1;HE2315X	F315D1	C(CM)-UKF315ED1;HE2315X				
UK316D1;H2316X	F316D1	C(CM)-UKF316D1;H2316X	4	116	14	16
UK316D1;HA2316	F316D1	C(CM)-UKF316AD1;HA2316	5/32	4 9/16	31	35
UK316D1;HE2316X	F316D1	C(CM)-UKF316ED1;HE2316X				
UK317D1;H2317X	F317D1	C(CM)-UKF317D1;H2317X	5	129	15	19
UK317D1;HA2317X	F317D1	C(CM)-UKF317AD1;HA2317X	13/64	5 3/32	33	42
UK317D1;HE2317X	F317D1	C(CM)-UKF317ED1;HE2317X				
UK318D1;H2318X	F318D1	C(CM)-UKF318D1;H2318X	5	129	19	23
UK318D1;HA2318X	F318D1	C(CM)-UKF318AD1;HA2318X	13/64	5 3/32	42	51
UK319D1;H2319X	F319D1	C(CM)-UKF319D1;H2319X	5	149	22	26
UK319D1;HE2319X	F319D1	C(CM)-UKF319ED1;HE2319X	13/64	5 7/8	49	57
UK320D1;H2320X	F320D1	C(CM)-UKF320D1;H2320X	5	154	27	32
UK320D1;HA2320	F320D1	C(CM)-UKF320AD1;HA2320	13/64	6 1/16	60	71
UK320D1;HE2320X	F320D1	C(CM)-UKF320ED1;HE2320X				
UK322D1;H2322X	F322D1	C(CM)-UKF322D1;H2322X	5	160	35	41
UK324D1;H2324	F324D1	C(CM)-UKF324D1;H2324	5	172	48	56
UK326D1;H2326	F326D1	C(CM)-UKF326D1;H2326	6	178	63	75
UK328D1;H2328	F328D1	C(CM)-UKF328D1;H2328	6	192	90	101

Square flanged unit, cast housing
Adapter type

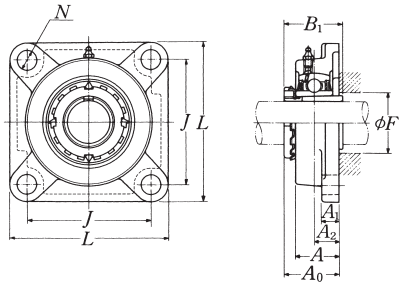

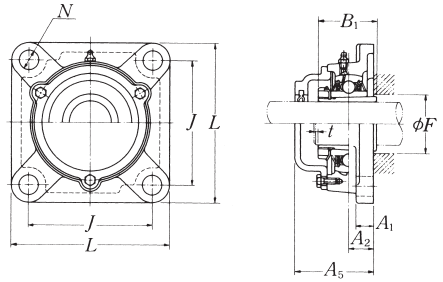

Cast dust cover type
Open end **C-UKF···D1**
Closed end **CM-UKF···D1**

Shaft dia. mm / inch	Unit number (1)(2)(3)	Nominal dimensions mm / inch L	J	A_2	A_1	A	N	A_0	B_1	F min.	Bolt size mm / inch
20	UKFX05D1;H2305X	108	83	18	13	30	12	39	35	–	M10
3/4	UKFX05D1;HE2305	4 1/4	3 17/64	45/64	1/2	1 3/16	15/32	1 17/32	1.378	–	3/8
25	UKFX06D1;H2306X	117	92	19	14	34	16	41.5	38	–	M14
7/8	UKFX06D1;HS2306										
1	UKFX06D1;HE2306X	4 19/32	3 5/8	3/4	9/16	1 11/32	5/8	1 41/64	1.496	–	1/2
30	UKFX07D1;H2307X	130	102	21	14	38	16	45.5	43	–	M14
1 1/8	UKFX07D1;HS2307	5 1/8	4 1/64	53/64	9/16	1 1/2	5/8	1 51/64	1.693	–	1/2
35	UKFX08D1;H2308X	137	105	22	14	40	19	47.5	46	46	M16
1 1/4	UKFX08D1;HE2308X										
1 3/8	UKFX08D1;HS2308X	5 13/32	4 9/64	55/64	9/16	1 9/16	3/4	1 7/8	1.811	1 13/16	5/8
40	UKFX09D1;H2309X	143	111	23	14	40	19	50	50	52	M16
1 7/16	UKFX09D1;HA2309										
1 1/2	UKFX09D1;HE2309X	5 5/8	4 3/8	29/32	9/16	1 9/16	3/4	1 31/32	1.969	2 1/16	5/8
1 5/8	UKFX09D1;HS2309X										
45	UKFX10D1;H2310X	162	130	26	20	44	19	55.5	55	57	M16
1 5/8	UKFX10D1;HS2310										
1 11/16	UKFX10D1;HA2310	6 3/8	5 1/8	1 1/32	25/32	1 23/32	3/4	2 3/16	2.165	2 1/4	5/8
1 3/4	UKFX10D1;HE2310X										
50	UKFX11D1;H2311X	175	143	29	20	49	19	60	59	64	M16
1 7/8	UKFX11D1;HS2311										
1 15/16	UKFX11D1;HA2311	6 7/8	5 5/8	1 9/64	25/32	1 15/16	3/4	2 23/64	2.323	2 17/32	5/8
2	UKFX11D1;HE2311XY										
55	UKFX12D1;H2312X	187	149	34	21	59	19	67	62	–	M16
2 1/8	UKFX12D1;HS2312	7 3/8	5 55/64	1 11/32	13/16	2 5/16	3/4	2 21/64	2.441	–	5/8

Notes (1) These numbers indicate relubricatable type. If maintenance free type is needed, please order without suffix "D1".
(2) Adapter number with suffix "X" means a narrow slot type adapter sleeve.
In this case the lock washer with the straight inner prong should be used.
(3) For HE2311XY, screw thread pitch different from the standard is applied, because of the thin thread section of sleeve.
To distinguish it, a suffix "Y" is added.
(4) If the inch series housing units with dust cover are ordered with a closed end, the suffixes E, S or A are not included.
Example: CM-UKFX05D1;HE2305

Remarks Please refer to page **A21** for size of grease fitting.

Bearing number	Housing number	Unit number (4) cast dust cover type	Nominal dimensions mm / inch t max.	A_5	Mass of unit kg / lb UKF	C(CM)
UKX05D1;H2305X	FX05D1	C(CM)-UKFX05D1;H2305X	2	56	1.1	1.3
UKX05D1;HE2305	FX05D1	C(CM)-UKFX05ED1;HE2305	5/64	2 7/32	2.4	2.9
UKX06D1;H2306X	FX06D1	C(CM)-UKFX06D1;H2306X	2	59	1.6	1.8
UKX06D1;HS2306	FX06D1	C(CM)-UKFX06SD1;HS2306				
UKX06D1;HE2306X	FX06D1	C(CM)-UKFX06ED1;HE2306X	5/64	2 5/16	3.5	4.0
UKX07D1;H2307X	FX07D1	C(CM)-UKFX07D1;H2307X	3	66	2.1	2.5
UKX07D1;HS2307	FX07D1	C(CM)-UKFX07SD1;HS2307	1/8	2 19/32	4.6	5.5
UKX08D1;H2308X	FX08D1	C(CM)-UKFX08D1;H2308X	3	70	2.5	2.9
UKX08D1;HE2308X	FX08D1	C(CM)-UKFX08ED1;HE2308X				
UKX08D1;HS2308X	FX08D1	C(CM)-UKFX08SD1;HS2308X	1/8	2 3/4	5.5	6.4
UKX09D1;H2309X	FX09D1	C(CM)-UKFX09D1;H2309X	3	73	2.5	3.0
UKX09D1;HA2309	FX09D1	C(CM)-UKFX09AD1;HA2309				
UKX09D1;HE2309X	FX09D1	C(CM)-UKFX09ED1;HE2309X	1/8	2 7/8	5.5	6.6
UKX09D1;HS2309X	FX09D1	C(CM)-UKFX09SD1;HS2309X				
UKX10D1;H2310X	FX10D1	C(CM)-UKFX10D1;H2310X	3	76	3.8	4.4
UKX10D1;HS2310	FX10D1	C(CM)-UKFX10SD1;HS2310				
UKX10D1;HA2310	FX10D1	C(CM)-UKFX10AD1;HA2310	1/8	3	8.4	9.7
UKX10D1;HE2310X	FX10D1	C(CM)-UKFX10ED1;HE2310X				
UKX11D1;H2311X	FX11D1	C(CM)-UKFX11D1;H2311X	4	86	4.7	5.4
UKX11D1;HS2311	FX11D1	C(CM)-UKFX11SD1;HS2311				
UKX11D1;HA2311	FX11D1	C(CM)-UKFX11AD1;HA2311	5/32	3 3/8	10	12
UKX11D1;HE2311XY	FX11D1	C(CM)-UKFX11ED1;HE2311XY				
UKX12D1;H2312X	FX12D1	C(CM)-UKFX12D1;H2312X	4	94	6.4	7.2
UKX12D1;HS2312	FX12D1	C(CM)-UKFX12SD1;HS2312	5/32	3 31/32	14	16

Square flanged unit, cast housing
Adapter type

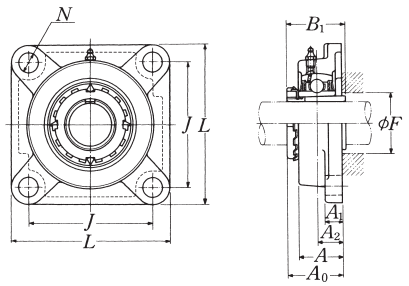

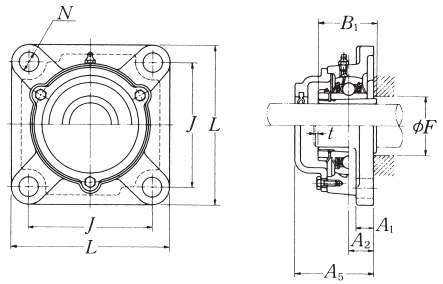

Cast dust cover type
Open end **C-UKF···D1**
Closed end **CM-UKF···D1**

Shaft dia. mm / inch	Unit number (1)(2)	Nominal dimensions mm / inch L	J	A_2	A_1	A	N	A_0	B_1	F min.	Bolt size mm / inch
60	UKFX13D1;H2313X	187	149	34	21	59	19	69	65	–	M16
2 3/16	UKFX13D1;HA2313										
2 1/4	UKFX13D1;HE2313X	7 3/8	5 55/64	1 11/32	13/16	2 5/16	3/4	2 23/32	2.559	–	5/8
2 3/8	UKFX13D1;HS2313X										
65	UKFX15D1;H2315X	197	152	40	24	68	23	77.5	73	–	M20
2 7/16	UKFX15D1;HA2315	7 3/4	5 63/64	1 37/64	15/16	2 11/16	29/32	3 3/64	2.874	–	3/4
2 1/2	UKFX15D1;HE2315X										
70	UKFX16D1;H2316X	214	171	40	24	70	23	80	78	90	M20
2 11/16	UKFX16D1;HA2316	8 7/16	6 47/64	1 37/64	15/16	2 3/4	29/32	3 5/32	3.071	3 17/32	3/4
2 3/4	UKFX16D1;HE2316X										
75	UKFX17D1;H2317X	214	171	40	24	70	23	81.5	82	95	M20
2 15/16	UKFX17D1;HA2317X	8 7/16	6 47/64	1 37/64	15/16	2 3/4	29/32	3 13/64	3.228	3 3/4	3/4
3	UKFX17D1;HE2317X										
80	UKFX18D1;H2318X	214	171	45	24	76	23	87.5	86	102	M20
3 3/16	UKFX18D1;HA2318X	8 7/16	6 47/64	1 49/64	15/16	3	29/32	3 7/16	3.386	4 1/32	3/4
90	UKFX20D1;H2320X	268	211	59	31	97	31	107.5	97	–	M27

Bearing number	Housing number	Unit number (3) cast dust cover type	Nominal dimensions mm / inch t max.	A_5	Mass of unit kg / lb UKF	C(CM)
UKX13D1;H2313X	FX13D1	C(CM)-UKFX13D1;H2313X	4	101	6.4	7.6
UKX13D1;HA2313	FX13D1	C(CM)-UKFX13AD1;HA2313				
UKX13D1;HE2313X	FX13D1	C(CM)-UKFX13ED1;HE2313X	5/32	3 31/32	14	17
UKX13D1;HS2313X	FX13D1	C(CM)-UKFX13SD1;HS2313X				
UKX15D1;H2315X	FX15D1	C(CM)-UKFX15D1;H2315X	4	112	8.7	10
UKX15D1;HA2315	FX15D1	C(CM)-UKFX15AD1;HA2315	5/32	4 13/32	19	22
UKX15D1;HE2315X	FX15D1	C(CM)-UKFX15ED1;HE2315X				
UKX16D1;H2316X	FX16D1	C(CM)-UKFX16D1;H2316X	4	118	11	12
UKX16D1;HA2316	FX16D1	C(CM)-UKFX16AD1;HA2316	5/32	4 21/32	24	26
UKX16D1;HE2316X	FX16D1	C(CM)-UKFX16ED1;HE2316X				
UKX17D1;H2317X	FX17D1	C(CM)-UKFX17D1;H2317X	5	122	12	14
UKX17D1;HA2317X	FX17D1	C(CM)-UKFX17AD1;HA2317X	13/64	4 13/16	26	31
UKX17D1;HE2317X	FX17D1	C(CM)-UKFX17ED1;HE2317X				
UKX18D1;H2318X	FX18D1	C(CM)-UKFX18D1;H2318X	5	135	12	14
UKX18D1;HA2318X	FX18D1	C(CM)-UKFX18AD1;HA2318	13/64	5 5/16	26	31
UKX20D1;H2320X	FX20D1	C(CM)-UKFX20D1;H2320X	5	146.5	20	22

Notes (1) These numbers indicate relubricatable type. If maintenance free type is needed, please order without suffix "D1".
(2) Adapter number with suffix "X" means a narrow slot type adapter sleeve.
In this case the lock washer with the straight inner prong should be used.
(3) If the inch series housing units with dust cover are ordered with a closed end, the suffixes E, S or A are not included.
Example: CM-UKFX05D1;HE2305

Remarks Please refer to page **A21** for size of grease fitting.

Square flanged unit, cast housing with spigot joint
Adapter type

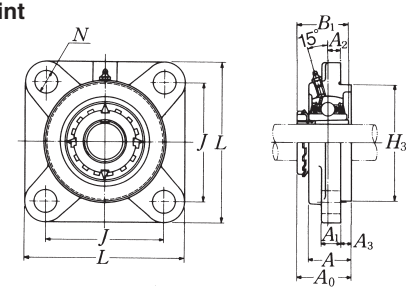

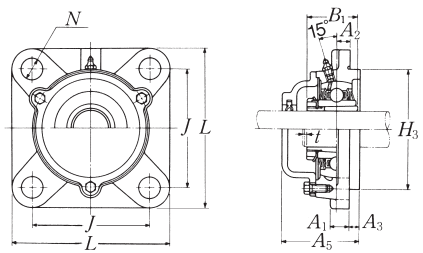

Cast dust cover type
Open end **C-UKFS···D1**
Closed end **CM-UKFS···D1**

Shaft dia. mm / inch	Unit number (1)(2)(3)	Nominal dimensions mm / inch L	J	A_2	N	A_3	A_1	A	H_3	A_0	B_1	Bolt size mm / inch
20	UKFS305D1;H2305X	110	80	9	16	7	13	29	80	37	35	M14
3/4	UKFS305D1;HE2305	4 11/32	3 5/32	23/64	5/8	9/32	1/2	1 9/64	3.1496	1 29/64	1.378	1/2
25	UKFS306D1;H2306X	125	95	10	16	8	15	32	90	40.5	38	M14
7/8	UKFS306D1;HS2306	4 29/32	3 47/64	25/64	5/8	5/16	19/32	1 17/64	3.5433	1 19/32	1.496	1/2
1	UKFS306D1;HE2306X											
30	UKFS307D1;H2307X	135	100	11	19	9	16	36	100	45.5	43	M16
1 1/8	UKFS307D1;HS2307	5 5/16	3 15/16	7/16	3/4	23/64	5/8	1 13/32	3.9370	1 51/64	1.693	5/8
35	UKFS308D1;H2308X	150	112	13	19	10	17	40	115	50	46	M16
1 1/4	UKFS308D1;HE2308X	5 29/32	4 13/32	33/64	3/4	25/64	21/32	1 9/16	4.5276	1 31/32	1.811	5/8
1 3/8	UKFS308D1;HS2308X											
40	UKFS309D1;H2309X	160	125	14	19	11	18	44	125	54.5	50	M16
1 7/16	UKFS309D1;HA2309											
1 1/2	UKFS309D1;HE2309X	6 5/16	4 59/64	35/64	3/4	7/16	23/32	1 47/64	4.9213	2 9/64	1.969	5/8
1 5/8	UKFS309D1;HS2309X											
45	UKFS310D1;H2310X	175	132	16	23	12	19	48	140	60.5	55	M20
1 5/8	UKFS310D1;HS2310											
1 11/16	UKFS310D1;HA2310	6 7/8	5 13/64	5/8	29/32	15/32	3/4	1 57/64	5.5118	2 3/8	2.165	3/4
1 3/4	UKFS310D1;HE2310X											
50	UKFS311D1;H2311X	185	140	17	23	13	20	52	150	64	59	M20
1 7/8	UKFS311D1;HS2311											
1 15/16	UKFS311D1;HA2311	7 9/32	5 33/64	43/64	29/32	33/64	25/32	2 3/64	5.9055	2 33/64	2.323	3/4
2	UKFS311D1;HE2311XY											
55	UKFS312D1;H2312X	195	150	19	23	14	22	56	160	69.5	62	M20
2 1/8	UKFS312D1;HS2312	7 11/16	5 29/32	3/4	29/32	35/64	7/8	2 13/64	6.2992	2 47/64	2.441	3/4

Notes (1) These numbers indicate relubricatable type. If maintenance free type is needed, please order without suffix "D1".
(2) Adapter number with suffix "X" means a narrow slot type adapter sleeve.
In this case the lock washer with the straight inner prong should be used.
(3) For HE2311XY, screw thread pitch different from the standard is applied, because of the thin thread section of sleeve.
To distinguish it, a suffix "Y" is added.
(4) If the inch series housing units with dust cover are ordered with a closed end, the suffixes E, S or A are not included.
Example: CM-UKFS305D1;HE2305

Remarks Please refer to page **A21** for size of grease fitting.

Bearing number	Housing number	Unit number (4) cast dust cover type	Nominal dimensions mm / inch t max.	A_5	Mass of unit kg / lb UKFS	C(CM)
UK305D1;H2305X	FS305D1	C(CM)-UKFS305D1;H2305X	2	56	1.2	1.5
UK305D1;HE2305	FS305D1	C(CM)-UKFS305ED1;HE2305	5/64	2 13/64	2.6	3.3
UK306D1;H2306X	FS306D1	C(CM)-UKFS306D1;H2306X	2	60	1.8	2.2
UK306D1;HS2306	FS306D1	C(CM)-UKFS306SD1;HS2306	5/64	2 23/64	4.0	4.9
UK306D1;HE2306X	FS306D1	C(CM)-UKFS306ED1;HE2306X				
UK307D1;H2307X	FS307D1	C(CM)-UKFS307D1;H2307X	3	67	2.3	2.9
UK307D1;HS2307	FS307D1	C(CM)-UKFS307SD1;HS2307	1/8	2 41/64	5.1	6.4
UK308D1;H2308X	FS308D1	C(CM)-UKFS308D1;H2308X	3	76	3.2	3.7
UK308D1;HE2308X	FS308D1	C(CM)-UKFS308ED1;HE2308X	1/8	2 63/64	7.1	8.2
UK308D1;HS2308X	FS308D1	C(CM)-UKFS308SD1;HS2308X				
UK309D1;H2309X	FS309D1	C(CM)-UKFS309D1;H2309X	3	80	3.8	4.7
UK309D1;HA2309	FS309D1	C(CM)-UKFS309AD1;HA2309				
UK309D1;HE2309X	FS309D1	C(CM)-UKFS309ED1;HE2309X	1/8	3 5/32	8.4	10
UK309D1;HS2309X	FS309D1	C(CM)-UKFS309SD1;HS2309X				
UK310D1;H2310X	FS310D1	C(CM)-UKFS310D1;H2310X	3	88	5.1	6.3
UK310D1;HS2310	FS310D1	C(CM)-UKFS310SD1;HS2310				
UK310D1;HA2310	FS310D1	C(CM)-UKFS310AD1;HA2310	1/8	3 15/32	11	14
UK310D1;HE2310X	FS310D1	C(CM)-UKFS310ED1;HE2310X				
UK311D1;H2311X	FS311D1	C(CM)-UKFS311D1;H2311X	4	93	5.9	7.3
UK311D1;HS2311	FS311D1	C(CM)-UKFS311SD1;HS2311				
UK311D1;HA2311	FS311D1	C(CM)-UKFS311AD1;HA2311	5/32	3 21/32	13	16
UK311D1;HE2311XY	FS311D1	C(CM)-UKFS311ED1;HE2311XY				
UK312D1;H2312X	FS312D1	C(CM)-UKFS312D1;H2312X	4	100	7.0	8.4
UK312D1;HS2312	FS312D1	C(CM)-UKFS312SD1;HS2312	5/32	3 15/16	15	19

Square flanged unit, cast housing with spigot
Adapter type

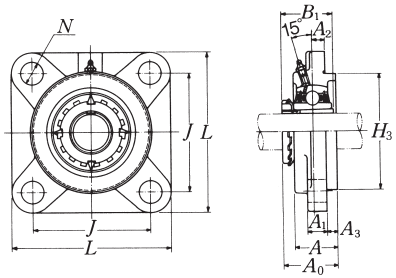

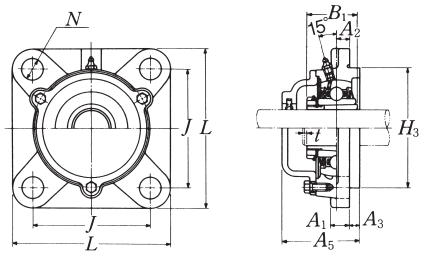

Cast dust cover type
Open end **C-UKFS···D1**
Closed end **CM-UKFS···D1**

Shaft dia. mm / inch	Unit number (1)(2)	Nominal dimensions mm / inch L	J	A_2	N	A_3	A_1	A	H_3	A_0	B_1	Bolt size mm / inch
60	UKFS313D1;H2313X	208	166	15	33	18	22	58	175	71.5	65	M20
2 3/16	UKFS313D1;HA2313											
2 1/4	UKFS313D1;HE2313X	8 3/16	6 17/32	19/32	29/32	45/64	7/8	2 9/32	6.8898	2 13/16	2.559	3/4
2 3/8	UKFS313D1;HS2313X											
65	UKFS315D1;H2315X	236	184	21	25	18	25	66	200	81.5	73	M22
2 7/16	UKFS315D1;HA2315	9 9/32	7 1/4	53/64	63/64	45/64	31/32	2 19/32	7.8740	3 13/64	2.874	7/8
2 1/2	UKFS315D1;HE2315X											
70	UKFS316D1;H2316X	250	196	18	31	20	27	68	210	84	78	M27
2 11/16	UKFS316D1;HA2316	9 27/32	7 23/32	45/64	1 7/32	25/32	1 1/16	2 43/64	8.2677	3 5/16	3.071	1
2 3/4	UKFS316D1;HE2316X											
75	UKFS317D1;H2317X	260	204	24	31	20	27	74	220	92	82	M27
2 15/16	UKFS317D1;HA2317X	10 1/4	8 1/32	15/16	1 7/32	25/32	1 1/16	2 29/32	8.6614	3 5/8	3.228	1
3	UKFS317D1;HE2317X											
80	UKFS318D1;H2318X	280	216	24	35	20	30	76	240	94	86	M30
3 3/16	UKFS318D1;HA2318X	11 1/32	8 1/2	15/16	1 3/8	25/32	1 3/16	2 63/64	9.4488	3 45/64	3.386	1 1/8
85	UKFS319D1;H2319X	290	228	39	35	20	30	94	250	111.5	90	M30
3 1/4	UKFS319D1;HE2319X	11 13/32	8 31/32	1 17/32	1 3/8	25/32	1 3/16	3 45/64	9.8425	4 25/64	3.543	1 1/8
90	UKFS320D1;H2320X	310	242	39	38	20	32	94	260	115.5	97	M33
3 7/16	UKFS320D1;HA2320	12 7/32	9 17/32	1 17/32	1 1/2	25/32	1 1/4	3 45/64	10.2362	4 35/64	3.819	1 1/4
3 1/2	UKFS320D1;HE2320X											
100	UKFS322D1;H2322X	340	266	35	41	25	35	96	300	121	105	M36
110	UKFS324D1;H2324	370	290	35	41	30	40	110	330	130	112	M36
115	UKFS326D1;H2326	410	320	35	41	30	45	115	360	133	121	M36
125	UKFS328D1;H2328	450	350	45	41	30	55	125	400	146.5	131	M36

Notes (1) These numbers indicate relubricatable type. If maintenance free type is needed, please order without suffix "D1".
(2) Adapter number with suffix "X" means a narrow slot type adapter sleeve.
In this case the lock washer with the straight inner prong should be used.
(3) If the inch series housing units with dust cover are ordered with a closed end, the suffixes E, S or A are not included.
Example: CM-UKFS305D1;HE2305

Remarks Please refer to page **A21** for size of grease fitting.

Bearing number	Housing number	Unit number (3) cast dust cover type	Nominal dimensions mm / inch t max.	A_5	Mass of unit kg / lb UKFS	C(CM)
UK313D1;H2313X	FS313D1	C(CM)-UKFS313D1;H2313X	4	103	8.4	10
UK313D1;HA2313	FS313D1	C(CM)-UKFS313AD1;HA2313				
UK313D1;HE2313X	FS313D1	C(CM)-UKFS313ED1;HE2313X	5/32	4 1/16	19	22
UK313D1;HS2313X	FS313D1	C(CM)-UKFS313SD1;HS2313X				
UK315D1;H2315X	FS315D1	C(CM)-UKFS315D1;H2315X	4	114	12	14
UK315D1;HA2315	FS315D1	C(CM)-UKFS315AD1;HA2315	5/32	4 31/64	26	31
UK315D1;HE2315X	FS315D1	C(CM)-UKFS315ED1;HE2315X				
UK316D1;H2316X	FS316D1	C(CM)-UKFS316D1;H2316X	4	116	15	17
UK316D1;HA2316	FS316D1	C(CM)-UKFS316AD1;HA2316	5/32	4 9/16	33	37
UK316D1;HE2316X	FS316D1	C(CM)-UKFS316ED1;HE2316X				
UK317D1;H2317X	FS317D1	C(CM)-UKFS317D1;H2317X	5	129	17	20
UK317D1;HA2317X	FS317D1	C(CM)-UKFS317AD1;HA2317X	13/64	5 5/64	37	44
UK317D1;HE2317X	FS317D1	C(CM)-UKFS317ED1;HE2317X				
UK318D1;H2318X	FS318D1	C(CM)-UKFS318D1;H2318X	5	129	21	24
UK318D1;HA2318X	FS318D1	C(CM)-UKFS318AD1;HA2318X	13/64	5 5/64	46	53
UK319D1;H2319X	FS319D1	C(CM)-UKFS319D1;H2319X	5	149	24	29
UK319D1;HE2319X	FS319D1	C(CM)-UKFS319ED1;HE2319X	13/64	5 55/64	53	64
UK320D1;H2320X	FS320D1	C(CM)-UKFS320D1;H2320X	5	154	29	34
UK320D1;HA2320	FS320D1	C(CM)-UKFS320AD1;HA2320	13/64	6 1/16	64	75
UK320D1;HE2320X	FS320D1	C(CM)-UKFS320ED1;HE2320X				
UK322D1;H2322X	FS322D1	C(CM)-UKFS322D1;H2322X	5	160	38	46
UK324D1;H2324	FS324D1	C(CM)-UKFS324D1;H2324	5	172	51	59
UK326D1;H2326	FS326D1	C(CM)-UKFS326D1;H2326	6	178	69	79
UK328D1;H2328	FS328D1	C(CM)-UKFS328D1;H2328	6	192	98	110

Round flanged unit, cast housing with spigot joint
Adapter type

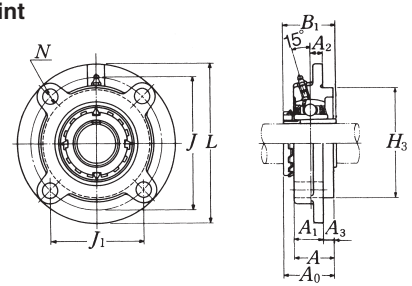

Shaft dia. mm / inch	Unit number (1)(2)(3)	Nominal dimensions mm / inch L	J	(J1)	A2	N	A3	A1	A	H3	A0	B1	F min.	Bolt size mm / inch	Bearing number
20	UKFC205D1;H2305X	115	90	63.6	10	12	6	21	27	70	35.5	35	30	M10	UK205D1;H2305X
3/4	UKFC205D1;HE2305	4 17/32	3 35/64	2 1/2	25/64	15/32	15/64	13/16	1 1/16	2.7559	1 25/64	1.378	1 3/16	3/8	UK205D1;HE2305
25	UKFC206D1;H2306X	125	100	70.7	10	12	8	23	31	80	39	38	36	M10	UK206D1;H2306X
7/8	UKFC206D1;HS2306														UK206D1;HS2306
1	UKFC206D1;HE2306X	4 29/32	3 15/16	2 25/32	25/64	15/32	5/16	29/32	1 7/32	3.1496	1 17/32	1.496	1 13/32	3/8	UK206D1;HE2306X
30	UKFC207D1;H2307X	135	110	77.8	11	14	8	26	34	90	42.5	43	40	M12	UK207D1;H2307X
1 1/8	UKFC207D1;HS2307	5 5/16	4 21/64	3 1/16	7/16	35/64	5/16	1 1/32	1 11/32	3.5433	1 43/64	1.693	1 9/16	7/16	UK207D1;HS2307
35	UKFC208D1;H2308X	145	120	84.9	11	14	10	26	36	100	46.5	46	46	M12	UK208D1;H2308X
1 1/4	UKFC208D1;HE2308X														UK208D1;HE2308X
1 3/8	UKFC208D1;HS2308X	5 23/32	4 23/32	3 11/32	7/16	35/64	25/64	1 1/32	1 27/64	3.9370	1 53/64	1.811	1 13/16	7/16	UK208D1;HS2308X
40	UKFC209D1;H2309X	160	132	93.3	10	16	12	26	38	105	48.5	50	52	M14	UK209D1;H2309X
1 7/16	UKFC209D1;HA2309														UK209D1;HA2309
1 1/2	UKFC209D1;HE2309X	6 5/16	5 13/64	3 43/64	25/64	5/8	15/32	1 1/32	1 1/2	4.1339	1 29/32	1.969	2 1/16	1/2	UK209D1;HE2309X
1 5/8	UKFC209D1;HS2309X														UK209D1;HS2309X
45	UKFC210D1;H2310X	165	138	97.6	10	16	12	28	40	110	50	55	57	M14	UK210D1;H2310X
1 5/8	UKFC210D1;HS2310														UK210D1;HS2310
1 11/16	UKFC210D1;HA2310	6 1/2	5 7/16	3 27/32	25/64	5/8	15/32	1 3/32	1 37/64	4.3307	1 31/32	2.165	2 1/4	1/2	UK210D1;HA2310
1 3/4	UKFC210D1;HE2310X														UK210D1;HE2310X
50	UKFC211D1;H2311X	185	150	106.1	13	19	12	31	43	125	54.5	59	64	M16	UK211D1;H2311X
1 7/8	UKFC211D1;HS2311														UK211D1;HS2311
1 15/16	UKFC211D1;HA2311	7 9/32	5 29/32	4 11/64	33/64	3/4	15/32	1 7/32	1 11/16	4.9213	2 9/64	2.323	2 17/32	5/8	UK211D1;HA2311
2	UKFC211D1;HE2311XY														UK211D1;HE2311XY
55	UKFC212D1;H2312X	195	160	113.1	17	19	12	36	48	135	61	62	69	M16	UK212D1;H2312X
2 1/8	UKFC212D1;HS2312	7 11/16	6 19/64	4 29/64	43/64	3/4	15/32	1 13/32	1 57/64	5.3150	2 13/32	2.441	2 23/32	5/8	UK212D1;HS2312

Notes (1) These numbers indicate relubricatable type. If maintenance free type is needed, please order without suffix "D1".
(2) Adapter number with suffix "X" means a narrow slot type adapter sleeve.
In this case the lock washer with the straight inner prong should be used.
(3) For HE2311XY, screw thread pitch different from the standard is applied, because of the thin thread section of sleeve.
To distinguish it, a suffix "Y" is added.
(4) If the inch series housing units with dust cover are ordered with a closed end, the suffixes E, S or A are not included.
Example: ZM-UKFC205D1;HE2305

Remarks Please refer to page **A21** for size of grease fitting.

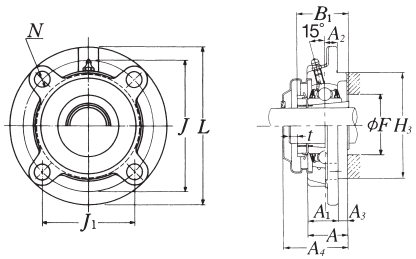

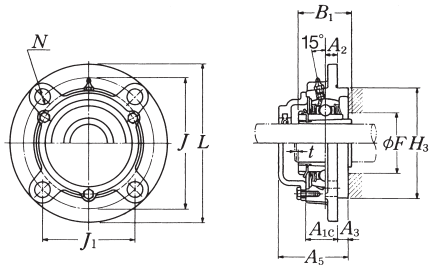

Pressed steel dust cover type
Open end **Z-UKFC···D1**
Closed end **ZM-UKFC···D1**

Cast dust cover type
Open end **C-UKFC···D1**
Closed end **CM-UKFC···D1**

Housing number	Unit number (4) pressed steel dust cover type	Unit number (4) cast dust cover type	Nominal dimensions mm / inch t max.	A4	A1c	A5	Mass of unit kg / lb UKFC	Z(ZM)	C(CM)
FC205D1	Z(ZM)-UKFC205D1;H2305X	C(CM)-UKFC205D1;H2305X	2	40	22	51	1.0	1.1	1.2
FC205D1	Z(ZM)-UKFC205ED1;HE2305	C(CM)-UKFC205ED1;HE2305	5/64	1 19/32	7/8	2	2.2	2.4	2.6
FC206D1	Z(ZM)-UKFC206D1;H2306X	C(CM)-UKFC206D1;H2306X	2	45	24.5	56	1.3	1.4	1.7
FC206D1	Z(ZM)-UKFC206SD1;HS2306	C(CM)-UKFC206SD1;HS2306							
FC206D1	Z(ZM)-UKFC206ED1;HE2306X	C(CM)-UKFC206ED1;HE2306X	5/64	1 3/4	31/32	2 13/64	2.9	3.1	3.7
FC207D1	Z(ZM)-UKFC207D1;H2307X	C(CM)-UKFC207D1;H2307X	3	49	26	59	1.7	1.8	2.0
FC207D1	Z(ZM)-UKFC207SD1;HS2307	C(CM)-UKFC207SD1;HS2307	1/8	1 15/16	1 1/32	2 21/64	3.7	4.0	4.4
FC208D1	Z(ZM)-UKFC208D1;H2308X	C(CM)-UKFC208D1;H2308X	3	56	27.5	66	2.1	2.2	2.6
FC208D1	Z(ZM)-UKFC208ED1;HE2308X	C(CM)-UKFC208ED1;HE2308X							
FC208D1	Z(ZM)-UKFC208SD1;HS2308X	C(CM)-UKFC208SD1;HS2308X	1/8	2 3/16	1 5/64	2 19/32	4.6	4.9	5.7
FC209D1	Z(ZM)-UKFC209D1;H2309X	C(CM)-UKFC209D1;H2309X	3	57	28	70	2.8	2.9	3.4
FC209D1	Z(ZM)-UKFC209AD1;HA2309	C(CM)-UKFC209AD1;HA2309							
FC209D1	Z(ZM)-UKFC209ED1;HE2309X	C(CM)-UKFC209ED1;HE2309X	1/8	2 1/4	1 7/64	2 3/4	6.2	6.4	7.5
FC209D1	Z(ZM)-UKFC209SD1;HS2309X	C(CM)-UKFC209SD1;HS2309X							
FC210D1	Z(ZM)-UKFC210D1;H2310X	C(CM)-UKFC210D1;H2310X	3	60	29	72	3.1	3.3	4.8
FC210D1	Z(ZM)-UKFC210SD1;HS2310	C(CM)-UKFC210SD1;HS2310							
FC210D1	Z(ZM)-UKFC210AD1;HA2310	C(CM)-UKFC210AD1;HA2310	1/8	2 3/8	3 3/8	2 53/64	6.8	7.3	11
FC210D1	Z(ZM)-UKFC210ED1;HE2310X	C(CM)-UKFC210ED1;HE2310X							
FC211D1	Z(ZM)-UKFC211D1;H2311X	C(CM)-UKFC211D1;H2311X	4	64	32.5	75	4.2	4.4	5.1
FC211D1	Z(ZM)-UKFC211SD1;HS2311	C(CM)-UKFC211SD1;HS2311							
FC211D1	Z(ZM)-UKFC211AD1;HA2311	C(CM)-UKFC211AD1;HA2311	5/32	2 1/2	3 3/8	2 61/64	9.3	9.7	11
FC211D1	Z(ZM)-UKFC211ED1;HE2311XY	C(CM)-UKFC211ED1;HE2311XY							
FC212D1	Z(ZM)-UKFC212D1;H2312X	C(CM)-UKFC212D1;H2312X	4	74	38	86	5.0	5.2	6.1
FC212D1	Z(ZM)-UKFC212SD1;HS2312	C(CM)-UKFC212SD1;HS2312	5/32	2 29/32	3 3/8	3 25/64	11	11	13

Round flanged unit, cast housing with spigot joint
Adapter type

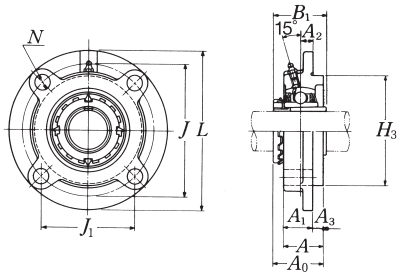

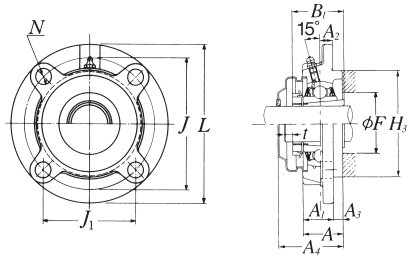

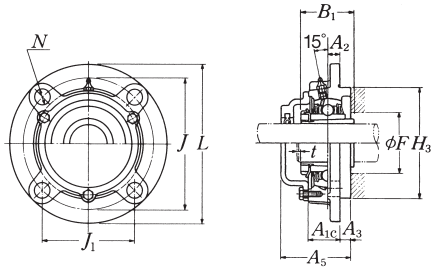

Pressed steel dust cover type
Open end **Z-UKFC···D1**
Closed end **ZM-UKFC···D1**

Cast dust cover type
Open end **C-UKFC···D1**
Closed end **CM-UKFC···D1**

Shaft dia. mm / inch	Unit number (1)(2)	Nominal dimensions mm / inch: L	J	(J_1)	A_2	N	A_3	A_1	A	H_3	A_0	B_1	F min.	Bolt size mm / inch	Bearing number
60	UKFC213D1;H2313X	205	170	120.2	16	19	14	36	50	145	64	65	74	M16	UK213D1;H2313X
2 3/16	UKFC213D1;HA2313														UK213D1;HA2313
2 1/4	UKFC213D1;HE2313X	8 1/16	6 11/16	4 47/64	5/8	3/4	35/64	1 13/32	1 31/32	5.7087	2 33/64	2.559	2 29/32	5/8	UK213D1;HE2313X
2 3/8	UKFC213D1;HS2313X														UK213D1;HS2313X
65	UKFC215D1;H2315X	220	184	130.1	18	19	16	40	56	160	71	73	84	M16	UK215D1;H2315X
2 7/16	UKFC215D1;HA2315														UK215D1;HA2315
2 1/2	UKFC215D1;HE2315X	8 21/32	7 1/4	5 1/8	45/64	3/4	5/8	1 9/16	2 13/64	6.2992	2 51/64	2.874	3 5/16	5/8	UK215D1;HE2315X
70	UKFC216D1;H2316X	240	200	141.4	18	23	16	42	58	170	73.5	78	90	M20	UK216D1;H2316X
2 11/16	UKFC216D1;HA2316														UK216D1;HA2316
2 3/4	UKFC216D1;HE2316X	9 7/16	7 7/8	5 9/16	45/64	29/32	5/8	1 21/32	2 9/32	6.6929	2 57/64	3.071	3 17/32	3/4	UK216D1;HE2316X
75	UKFC217D1;H2317X	250	208	147.1	18	23	18	45	63	180	77	82	95	M20	UK217D1;H2317X
2 15/16	UKFC217D1;HA2317X														UK217D1;HA2317X
3	UKFC217D1;HE2317X	9 27/32	8 3/16	5 51/64	45/64	29/32	45/64	1 25/32	2 31/64	7.0866	3 1/32	3.228	3 3/4	3/4	UK217D1;HE2317X
80	UKFC218D1;H2318X	265	220	155.6	22	23	18	50	68	190	81.5	86	102	M20	UK218D1;H2318X
3 3/16	UKFC218D1;HA2318X	10 7/16	8 21/32	6 1/8	55/64	29/32	45/64	1 31/32	2 43/64	7.4803	3 13/64	3.386	4 1/32	3/4	UK218D1;HA2318X

Notes (1) These numbers indicate relubricatable type. If maintenance free type is needed, please order without suffix "D1".
(2) Adapter number with suffix "X" means a narrow slot type adapter sleeve.
In this case the lock washer with the straight inner prong should be used.
(3) If the inch series housing units with dust cover are ordered with a closed end, the suffixes E, S or A are not included.
Example: ZM-UKFC205D1;HE2305

Remarks Please refer to page **A21** for size of grease fitting.

Housing number	Unit number (3) pressed steel dust cover type	Unit number (3) cast dust cover type	Nominal dimensions mm / inch: t max.	A_4	A_{1c}	A_5	Mass of unit kg / lb: UKFC	Z(ZM)	C(CM)
FC213D1	Z(ZM)-UKFC213D1;H2313X	C(CM)-UKFC213D1;H2313X	4	76	38	89.5	6.0	6.1	7.1
FC213D1	Z(ZM)-UKFC213AD1;HA2313	C(CM)-UKFC213AD1;HA2313							
FC213D1	Z(ZM)-UKFC213ED1;HE2313X	C(CM)-UKFC213ED1;HE2313X	5/32	3	3 3/8	3 17/32	13	13	16
FC213D1	Z(ZM)-UKFC213SD1;HS2313X	C(CM)-UKFC213SD1;HS2313X							
FC215D1	–	C(CM)-UKFC215D1;H2315X	4	–	43	102	7.7	–	9.3
FC215D1	–	C(CM)-UKFC215AD1;HA2315	5/32	–	1 11/16	4 1/64	17	–	21
FC215D1		C(CM)-UKFC215ED1;HE2315X							
FC216D1	–	C(CM)-UKFC216D1;H2316X	4	–	43	106	9.5	–	11
FC216D1	–	C(CM)-UKFC216AD1;HA2316	5/32	–	1 11/16	4 11/64	21	–	24
FC216D1		C(CM)-UKFC216ED1;HE2316X							
FC217D1	–	C(CM)-UKFC217D1;H2317X	5	–	45.5	114	11	–	13
FC217D1	–	C(CM)-UKFC217AD1;HA2317X	1 3/6	–	1 51/64	4 31/64	24	–	29
FC217D1		C(CM)-UKFC217ED1;HE2317X							
FC218D1	–	C(CM)-UKFC218D1;H2318X	5	–	50	122	13	–	15
FC218D1	–	C(CM)-UKFC218AD1;HA2318X	1 3/6	–	1 31/32	4 51/64	29	–	33

Round flanged unit, cast housing with spigot joint
Adapter type

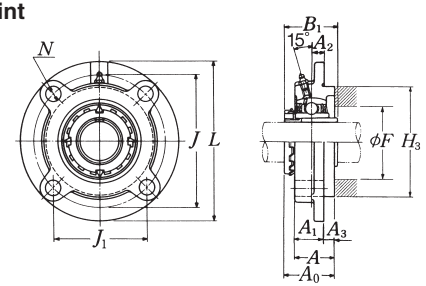

Shaft dia. mm / inch	Unit number (1)(2)(3)	Nominal dimensions mm / inch L	J	(J_1)	A_2	N	A_3	A_1	A	H_3	A_0	B_1	F min.
20	UKFCX05D1;H2305X	111	92	65.1	10	9.5	6	24	30	76	37	35	30
3/4	UKFCX05D1;HE2305	4 3/8	3 5/8	2 9/16	25/64	3/8	1/4	15/16	1 3/16	2.9921	1 29/64	1.378	1 3/16
25	UKFCX06D1;H2306X	127	105	74.2	8	12	9.5	22.5	32	85	40	38	36
7/8	UKFCX06D1;HS2306												
1	UKFCX06D1;HE2306X	5	4 9/64	2 59/64	5/16	15/32	3/8	7/8	1 17/64	3.3465	1 37/64	1.496	1 13/32
30	UKFCX07D1;H2307X	133	111	78.5	9	12	11	26	37	92	44.5	43	40
1 1/8	UKFCX07D1;HS2307	5 1/4	4 3/8	3 3/32	23/64	15/32	7/16	1 1/32	1 29/64	3.6220	1 3/4	1.693	1 9/16
35	UKFCX08D1;H2308X	133	111	78.5	9	12	11	26	37	92	45.5	46	46
1 1/4	UKFCX08D1;HE2308X												
1 3/8	UKFCX08D1;HS2308X	5 1/4	4 3/8	3 3/32	23/64	15/32	7/16	1 1/32	1 29/64	3.6220	1 51/64	1.811	1 13/16
40	UKFCX09D1;H2309X	155	130	91.9	8	14	12	25	37	108	47	50	52
1 7/16	UKFCX09D1;HA2309												
1 1/2	UKFCX09D1;HE2309X	6 3/32	5 1/8	3 5/8	5/16	35/64	15/32	31/32	1 29/64	4.2520	1 27/32	1.969	2 1/16
1 5/8	UKFCX09D1;HS2309X												
45	UKFCX10D1;H2310X	162	136	96.2	7	14	16	25	41	118	52.5	55	57
1 5/8	UKFCX10D1;HS2310												
1 11/16	UKFCX10D1;HA2310	6 3/8	5 23/64	3 25/32	9/32	35/64	5/8	31/32	1 39/64	4.6457	2 1/16	2.165	2 1/4
1 3/4	UKFCX10D1;HE2310X												
50	UKFCX11D1;H2311X	180	152	107.5	4	16	22	26	48	127	57	59	64
1 7/8	UKFCX11D1;HS2311												
1 15/16	UKFCX11D1;HA2311	7 3/32	5 63/64	4 15/64	5/32	5/8	55/64	1 1/32	1 57/64	5.0000	2 1/4	2.323	2 17/32
2	UKFCX11D1;HE2311XY												
55	UKFCX12D1;H2312X	194	165	116.7	11	16	20	33	53	140	64	62	69
2 1/8	UKFCX12D1;HS2312	7 5/8	6 1/2	4 19/32	7/16	5/8	25/32	1 5/16	2 5/64	5.5118	2 33/64	2.441	2 23/32

Bolt size mm / inch	Bearing number	Housing number	Mass of unit kg / lb
M8	UKX05D1;H2305X	FCX05D1	1.2
5/16	UKX05D1;HE2305	FCX05D1	2.6
M10	UKX06D1;H2306X	FCX06D1	1.5
	UKX06D1;HS2306	FCX06D1	
5/8	UKX06D1;HE2306X	FCX06D1	3.3
M10	UKX07D1;H2307X	FCX07D1	1.9
3/8	UKX07D1;HS2307	FCX07D1	4.2
M10	UKX08D1;H2308X	FCX08D1	2.2
	UKX08D1;HE2308X	FCX08D1	
3/8	UKX08D1;HS2308X	FCX08D1	4.9
M12	UKX09D1;H2309X	FCX09D1	2.7
	UKX09D1;HA2309	FCX09D1	
7/16	UKX09D1;HE2309X	FCX09D1	6.0
	UKX09D1;HS2309X	FCX09D1	
M12	UKX10D1;H2310X	FCX10D1	3.1
	UKX10D1;HS2310	FCX10D1	
7/16	UKX10D1;HA2310	FCX10D1	6.8
	UKX10D1;HE2310X	FCX10D1	
M14	UKX11D1;H2311X	FCX11D1	4.2
	UKX11D1;HS2311	FCX11D1	
1/2	UKX11D1;HA2311	FCX11D1	9.3
	UKX11D1;HE2311XY	FCX11D1	
M14	UKX12D1;H2312X	FCX12D1	5.5
1/2	UKX12D1;HS2312	FCX12D1	12

Notes (1) These numbers indicate relubricatable type. If maintenance free type is needed, please order without suffix "D1".
(2) Adapter number with suffix "X" means a narrow slot type adapter sleeve.
In this case the lock washer with the straight inner prong should be used.
(3) For HE2311XY, screw thread pitch different from the standard is applied, because of the thin thread section of sleeve.
To distinguish it, a suffix "Y" is added.

Remarks Please refer to page **A21** for size of grease fitting.

Round flanged unit, cast housing with spigot joint
Adapter type

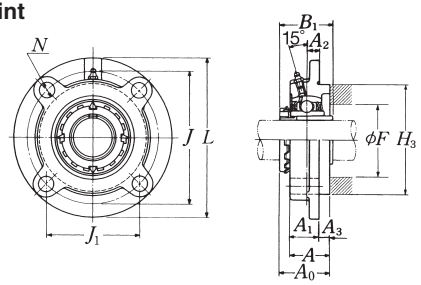

Shaft dia. mm inch	Unit number (1)(2)	Nominal dimensions mm inch L	J	(J_1)	A_2	N	A_3	A_1	A	H_3	A_0	B_1	F min.
60	UKFCX13D1;H2313X	194	165	116.7	11	16	20	33	53	140	66	65	74
2 3/16	UKFCX13D1;HA2313												
2 1/4	UKFCX13D1;HE2313X	7 5/8	6 1/2	4 19/32	7/16	5/8	25/32	1 5/16	2 5/64	5.5118	2 19/32	2.559	2 29/32
2 3/8	UKFCX13D1;HS2313X												
65	UKFCX15D1;H2315X	222	190	134.4	12	19	22	35	57	164	71.5	73	84
2 7/16	UKFCX15D1;HA2315	8 3/4	7 31/64	5 9/32	15/32	3/4	55/64	1 3/8	2 1/4	6.4567	2 13/16	2.874	3 5/16
2 1/2	UKFCX15D1;HE2315X												
70	UKFCX16D1;H2316X	260	219	154.9	10	23	25	36	61	186	75	78	90
2 11/16	UKFCX16D1;HA2316	10 1/4	8 5/8	6 3/32	25/64	29/32	63/64	1 13/32	2 13/32	7.3228	2 61/64	3.071	3 17/32
2 3/4	UKFCX16D1;HE2316X												
75	UKFCX17D1;H2317X	260	219	154.9	10	23	25	36	61	186	76.5	82	95
2 15/16	UKFCX17D1;HA2317X	10 1/4	8 5/8	6 3/32	25/64	29/32	63/64	1 13/32	2 13/32	7.3228	3 1/64	3.228	3 3/4
3	UKFCX17D1;HE2317X												
80	UKFCX18D1;H2318X	260	219	154.9	12	23	28	43	71	186	82.5	86	102
3 3/16	UKFCX18D1;HA2318X	10 1/4	8 5/8	6 3/32	15/32	29/32	1 7/64	1 11/16	2 51/64	7.3228	3 1/4	3.386	4 1/32
90	UKFCX20D1;H2320X	276	238	168.3	22	23	28	66	94	206	98.5	97	112

Bolt size mm inch	Bearing number	Housing number	Mass of unit kg lb
M14	UKX13D1;H2313X	FCX13D1	5.4
	UKX13D1;HA2313	FCX13D1	
1/2	UKX13D1;HE2313X	FCX13D1	12
	UKX15D1;HS2313X	FCX13D1	
M16	UKX15D1;H2315X	FCX15D1	8.2
	UKX15D1;HA2315	FCX15D1	
5/8	UKX15D1;HE2315X	FCX15D1	18
M20	UKX16D1;H2316X	FCX16D1	12
	UKX16D1;HA2316	FCX16D1	
3/4	UKX16D1;HE2316X	FCX16D1	26
M20	UKX17D1;H2317X	FCX17D1	12
	UKX17D1;HA2317X	FCX17D1	
3/4	UKX17D1;HE2317X	FCX17D1	26
M20	UKX18D1;H2318X	FCX18D1	12
3/4	UKX18D1;HA2318X	FCX18D1	26
M20	UKX20D1;H2320X	FCX20D1	18

Notes (1) These numbers indicate relubricatable type. If maintenance free type is needed, please order without suffix "D1".
(2) Adapter number with suffix "X" means a narrow slot type adapter sleeve.
In this case the lock washer with the straight inner prong should be used.

Remarks Please refer to page **A21** for size of grease fitting.

Rhombus flanged unit, cast housing
Adapter type

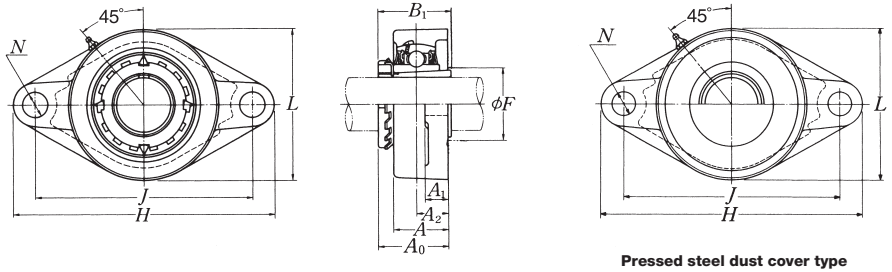

Pressed steel dust cover type
Open end **Z-UKFL···D1**
Closed end **ZM-UKFL···D1**

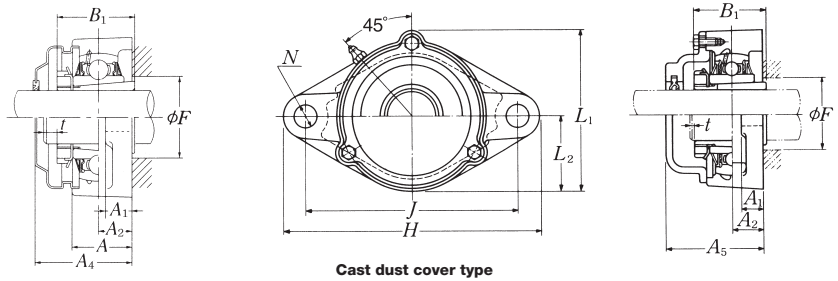

Cast dust cover type
Open end **C-UKFL···D1**
Closed end **CM-UKFL···D1**

Shaft dia. mm / inch	Unit number (1)(2)(3)	Nominal dimensions (mm / inch) H	J	A_2	A_1	A	N	L	A_0	B_1	F min.	Bolt size mm / inch	Bearing number
20	UKFL205D1;H2305X	130	99	16	13	27	16	68	35.5	35	30	M14	UK205D1;H2305X
3/4	UKFL205D1;HE2305	5 1/8	3 57/64	5/8	1/2	1 1/16	5/8	2 11/16	1 25/64	1.378	1 3/16	1/2	UK205D1;HE2305
25	UKFL206D1;H2306X	148	117	18	13	31	16	80	39	38	36	M14	UK206D1;H2306X
7/8	UKFL206D1;HS2306	5 13/16	4 39/64	45/64	1/2	1 7/32	5/8	3 5/32	1 17/32	1.496	1 13/32	1/2	UK206D1;HS2306
1	UKFL206D1;HE2306X												UK206D1;HE2306X
30	UKFL207D1;H2307X	161	130	19	15	34	16	90	42.5	43	40	M14	UK207D1;H2307X
1 1/8	UKFL207D1;HS2307	6 11/32	5 1/8	3/4	19/32	1 11/32	5/8	3 17/32	1 43/64	1.693	1 9/16	1/2	UK207D1;HS2307
35	UKFL208D1;H2308X	175	144	21	15	36	16	100	46.5	46	46	M14	UK208D1;H2308X
1 1/4	UKFL208D1;HE2308X	6 7/8	5 43/64	53/64	19/32	1 13/32	5/8	3 15/16	1 53/64	1.811	1 13/16	1/2	UK208D1;HE2308X
1 3/8	UKFL208D1;HS2308X												UK208D1;HS2308X
40	UKFL209D1;H2309X	188	148	22	16	38	19	108	48.5	50	52	M16	UK209D1;H2309X
1 7/16	UKFL209D1;HA2309												UK209D1;HA2309
1 1/2	UKFL209D1;HE2309X	7 13/32	5 53/64	55/64	5/8	1 1/2	3/4	4 1/4	1 29/32	1.969	2 1/16	5/8	UK209D1;HE2309X
1 5/8	UKFL209D1;HS2309X												UK209D1;HS2309X
45	UKFL210D1;H2310X	197	157	22	16	40	19	115	50	55	57	M16	UK210D1;H2310X
1 5/8	UKFL210D1;HS2310												UK210D1;HS2310
1 11/16	UKFL210D1;HA2310	7 3/4	6 3/16	55/64	5/8	1 9/16	3/4	4 17/32	1 31/32	2.165	2 1/4	5/8	UK210D1;HA2310
1 3/4	UKFL210D1;HE2310X												UK210D1;HE2310X
50	UKFL211D1;H2311X	224	184	25	18	43	19	130	54.5	59	64	M16	UK211D1;H2311X
1 7/8	UKFL211D1;HS2311												UK211D1;HS2311
1 15/16	UKFL211D1;HA2311	8 13/16	7 1/4	63/64	23/32	1 11/16	3/4	5 1/8	2 9/64	2.323	2 17/32	5/8	UK211D1;HA2311
2	UKFL211D1;HE2311XY												UK211D1;HE2311XY
55	UKFL212D1;H2312X	250	202	29	18	48	23	140	61	62	69	M20	UK212D1;H2312X
2 1/8	UKFL212D1;HS2312	9 27/32	7 61/64	1 9/64	23/32	1 7/8	29/32	5 1/2	2 13/32	2.441	2 23/32	3/4	UK212D1;HS2312

Housing number	Unit number (4) pressed steel dust cover type	Unit number (4) cast dust cover type	Nominal dimensions (mm / inch) t max.	A_4	A_5	L_1	L_2	Mass of unit (kg / lb) UKFL	Z(ZM)	C(CM)
FL205D1	Z(ZM)-UKFL205D1;H2305X	C(CM)-UKFL205D1;H2305X	2	40	51	74	34	0.6	0.7	0.8
FL205D1	Z(ZM)-UKFL205ED1;HE2305	C(CM)-UKFL205ED1;HE2305	5/64	1 19/32	2	2 29/32	1 11/32	1.3	1.5	1.8
FL206D1	Z(ZM)-UKFL206D1;H2306X	C(CM)-UKFL206D1;H2306X	2	45	56	85	40	0.9	1.0	1.2
FL206D1	Z(ZM)-UKFL206SD1;HS2306	C(CM)-UKFL206SD1;HS2306	5/64	1 3/4	2 7/32	3 11/32	1 9/16	2.0	2.2	2.9
FL206D1	Z(ZM)-UKFL206ED1;HE2306X	C(CM)-UKFL206ED1;HE2306X								
FL207D1	Z(ZM)-UKFL207D1;H2307X	C(CM)-UKFL207D1;H2307X	3	49	59	97	45	1.3	1.3	1.6
FL207D1	Z(ZM)-UKFL207SD1;HS2307	C(CM)-UKFL207SD1;HS2307	1/8	1 15/16	2 5/16	3 13/16	1 25/32	2.9	2.9	3.5
FL208D1	Z(ZM)-UKFL208D1;H2308X	C(CM)-UKFL208D1;H2308X	3	56	66	106	50	1.6	1.7	2.1
FL208D1	Z(ZM)-UKFL208ED1;HE2308X	C(CM)-UKFL208ED1;HE2308X	1/8	2 3/16	2 19/32	4 3/16	1 31/32	3.5	3.7	4.6
FL208D1	Z(ZM)-UKFL208SD1;HS2308X	C(CM)-UKFL208SD1;HS2308X								
FL209D1	Z(ZM)-UKFL209D1;H2309X	C(CM)-UKFL209D1;H2309X	3	57	70	113	54	2.0	2.1	2.5
FL209D1	Z(ZM)-UKFL209AD1;HA2309	C(CM)-UKFL209AD1;HA2309								
FL209D1	Z(ZM)-UKFL209ED1;HE2309X	C(CM)-UKFL209ED1;HE2309X	1/8	2 1/4	2 3/4	4 7/16	2 1/8	4.4	4.6	5.7
FL209D1	Z(ZM)-UKFL209SD1;HS2309X	C(CM)-UKFL209SD1;HS2309X								
FL210D1	Z(ZM)-UKFL210D1;H2310X	C(CM)-UKFL210D1;H2310X	3	60	72	120	58	2.2	2.4	2.9
FL210D1	Z(ZM)-UKFL210SD1;HS2310	C(CM)-UKFL210SD1;HS2310								
FL210D1	Z(ZM)-UKFL210AD1;HA2310	C(CM)-UKFL210AD1;HA2310	1/8	2 3/8	2 27/32	4 23/32	2 9/32	4.9	5.3	6.4
FL210D1	Z(ZM)-UKFL210ED1;HE2310X	C(CM)-UKFL210ED1;HE2310X								
FL211D1	Z(ZM)-UKFL211D1;H2311X	C(CM)-UKFL211D1;H2311X	4	64	75	133	65	3.1	3.4	3.7
FL211D1	Z(ZM)-UKFL211SD1;HS2311	C(CM)-UKFL211SD1;HS2311								
FL211D1	Z(ZM)-UKFL211AD1;HA2311	C(CM)-UKFL211AD1;HA2311	5/32	2 1/2	2 15/16	5 1/4	2 9/16	6.8	7.5	8.2
FL211D1	Z(ZM)-UKFL211ED1;HE2311XY	C(CM)-UKFL211ED1;HE2311XY								
FL212D1	Z(ZM)-UKFL212D1;H2312X	C(CM)-UKFL212D1;H2312X	4	74	86	144	70	3.9	4.2	4.7
FL212D1	Z(ZM)-UKFL212SD1;HS2312	C(CM)-UKFL212SD1;HS2312	5/32	2 29/32	3 3/8	5 21/32	2 3/4	8.6	9.3	10

Notes (1) These numbers indicate relubricatable type. If maintenance free type is needed, please order without suffix "D1".
(2) Adapter number with suffix "X" means a narrow slot type adapter sleeve.
In this case the lock washer with the straight inner prong should be used.
(3) For HE2311XY, screw thread pitch different from the standard is applied, because of the thin thread section of sleeve.
To distinguish it, a suffix "Y" is added.
(4) If the inch series housing units with dust cover are ordered with a closed end, the suffixes E, S or A are not included.
Example: ZM-UKFL205D1;HE2305

Remarks Please refer to page **A21** for size of grease fitting.

Rhombus flanged unit, cast housing
Adapter type

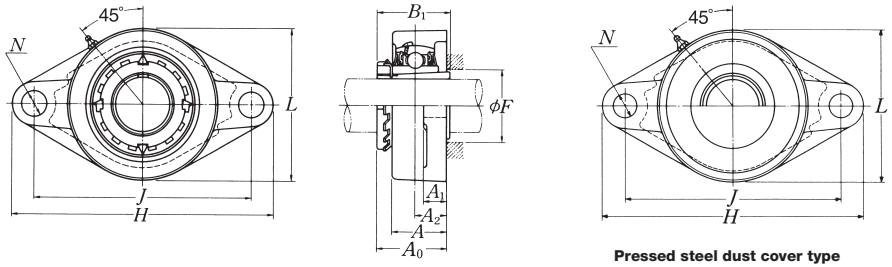

Pressed steel dust cover type
Open end **Z-UKFL···D1**
Closed end **ZM-UKFL···D1**

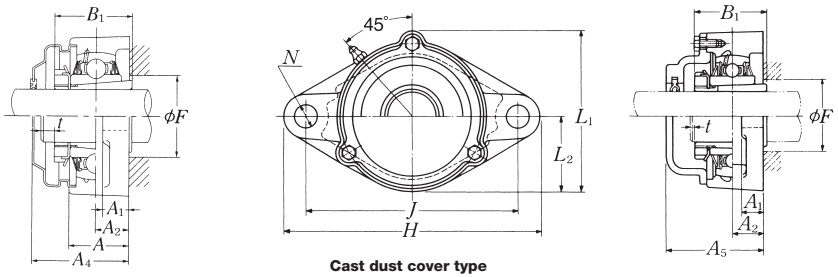

Cast dust cover type
Open end **C-UKFL···D1**
Closed end **CM-UKFL···D1**

Shaft dia. mm / inch	Unit number (1)(2)	Nominal dimensions (mm / inch) H	J	A_2	A_1	A	N	L	A_0	B_1	F min.	Bolt size mm / inch	Bearing number
60	UKFL213D1;H2313X	258	210	30	22	50	23	155	64	65	74	M20	UK213D1;H2313X
2 3/16	UKFL213D1;HA2313												UK213D1;HA2313
2 1/4	UKFL213D1;HE2313X	10 5/32	8 17/64	1 3/16	7/8	1 31/32	29/32	6 3/32	2 33/64	2.559	2 29/32	3/4	UK213D1;HE2313X
2 3/8	UKFL213D1;HS2313X												UK213D1;HS2313X
65	UKFL215D1;H2315X	275	225	34	22	56	23	165	71	73	84	M20	UK215D1;H2315X
2 7/16	UKFL215D1;HA2315	10 13/16	8 55/64	1 11/32	7/8	2 7/32	29/32	6 1/2	2 51/64	2.874	3 5/16	3/4	UK215D1;HA2315
2 1/2	UKFL215D1;HE2315X												UK215D1;HE2315X
70	UKFL216D1;H2316X	290	233	34	22	58	25	180	73.5	78	90	M22	UK216D1;H2316X
2 11/16	UKFL216D1;HA2316	11 13/32	9 11/64	1 11/32	7/8	2 9/32	63/64	7 3/32	2 57/64	3.071	3 17/32	7/8	UK216D1;HA2316
2 3/4	UKFL216D1;HE2316X												UK216D1;HE2316X
75	UKFL217D1;H2317X	305	248	36	24	63	25	190	77	82	95	M22	UK217D1;H2317X
2 15/16	UKFL217D1;HA2317X	12	9 49/64	1 27/64	15/16	2 15/32	63/64	7 15/32	3 1/32	3.228	3 3/4	7/8	UK217D1;HA2317X
3	UKFL217D1;HE2317X												UK217D1;HE2317X
80	UKFL218D1;H2318X	320	265	40	24	68	25	205	81.5	86	102	M22	UK218D1;H2318X
3 3/16	UKFL218D1;HA2318X	12 19/32	10 7/16	1 37/64	15/16	2 11/16	63/64	8 1/16	3 13/64	3.386	4 1/32	7/8	UK218D1;HA2318X

Housing number	Unit number (3) pressed steel dust cover type	Unit number (3) cast dust cover type	Nominal dimensions (mm / inch) t max.	A_4	A_5	L_1	L_2	Mass of unit (kg / lb) UKFL	Z(ZM)	C(CM)
FL213D1	Z(ZM)-UKFL213D1;H2313X	C(CM)-UKFL213D1;H2313X	4	76	90	157	78	5.0	5.4	6.0
FL213D1	Z(ZM)-UKFL213AD1;HA2313	C(CM)-UKFL213AD1;HA2313								
FL213D1	Z(ZM)-UKFL213ED1;HE2313X	C(CM)-UKFL213ED1;HE2313X	5/32	3	3 17/32	6 3/16	3 1/16	11	12	13
FL213D1	Z(ZM)-UKFL213SD1;HS2313X	C(CM)-UKFL213SD1;HS2313X								
FL215D1	–	C(CM)-UKFL215D1;H2315X	4	–	102	169	82	6.2	–	7.6
FL215D1	–	C(CM)-UKFL215AD1;HA2315	5/32	–	4 1/32	6 21/32	3 7/32	14	–	17
FL215D1		C(CM)-UKFL215ED1;HE2315X								
FL216D1	–	C(CM)-UKFL216D1;H2316X	4	–	106	183	90	7.9	–	9.3
FL216D1	–	C(CM)-UKFL216AD1;HA2316	5/32	–	4 3/16	7 7/32	3 17/32	17	–	21
FL216D1		C(CM)-UKFL216ED1;HE2316X								
FL217D1	–	C(CM)-UKFL217D1;H2317X	5	–	114	192	95	9.2	–	11
FL217D1	–	C(CM)-UKFL217AD1;HA2317X	13/64	–	4 1/2	7 9/16	3 3/4	20	–	24
FL217D1		C(CM)-UKFL217ED1;HE2317X								
FL218D1	–	C(CM)-UKFL218D1;H2318X	5	–	122	205	102	11	–	13
FL218D1	–	C(CM)-UKFL218AD1;HA2318X	13/64	–	4 13/16	8 1/16	4 1/32	24	–	29

Notes (1) These numbers indicate relubricatable type. If maintenance free type is needed, please order without suffix "D1".
(2) Adapter number with suffix "X" means a narrow slot type adapter sleeve.
In this case the lock washer with the straight inner prong should be used.
(3) If the inch series housing units with dust cover are ordered with a closed end, the suffixes E, S or A are not included.
Example: ZM-UKFL205D1;HE2305

Remarks Please refer to page **A21** for size of grease fitting.

Rhombus flanged unit, cast housing
Adapter type

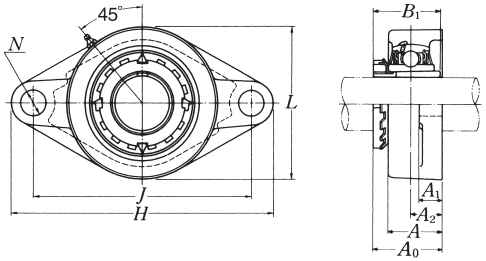

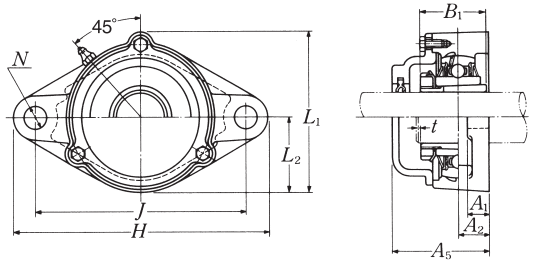

Cast dust cover type
Open end **C-UKFL···D1**
Closed end **CM-UKFL···D1**

Shaft dia. mm / inch	Unit number (1)(2)(3)	Nominal dimensions mm / inch H	J	A_2	A_1	A	N	L	A_0	B_1	Bolt size mm / inch
20	UKFL305D1;H2305X	150	113	16	13	29	19	80	37	35	M16
3/4	UKFL305D1;HE2305	5 29/32	4 29/64	5/8	1/2	1 5/32	3/4	3 5/32	1 29/64	1.378	5/8
25	UKFL306D1;H2306X	180	134	18	15	32	23	90	40.5	38	M20
7/8	UKFL306D1;HS2306										
1	UKFL306D1;HE2306X	7 3/32	5 9/32	45/64	19/32	1 1/4	29/32	3 17/32	1 19/32	1.496	3/4
30	UKFL307D1;H2307X	185	141	20	16	36	23	100	45.5	43	M20
1 1/8	UKFL307D1;HS2307	7 9/32	5 35/64	25/32	5/8	1 13/32	29/32	3 15/16	1 51/64	1.693	3/4
35	UKFL308D1;H2308X	200	158	23	17	40	23	112	50	46	M20
1 1/4	UKFL308D1;HE2308X										
1 3/8	UKFL308D1;HS2308X	7 7/8	6 7/32	29/32	21/32	1 9/16	29/32	4 13/32	1 31/32	1.811	3/4
40	UKFL309D1;H2309X	230	177	25	18	44	25	125	54.5	50	M22
1 7/16	UKFL309D1;HA2309										
1 1/2	UKFL309D1;HE2309X	9 1/16	6 31/32	63/64	23/32	1 23/32	63/64	4 29/32	2 9/64	1.969	7/8
1 5/8	UKFL309D1;HS2309X										
45	UKFL310D1;H2310X	240	187	28	19	48	25	140	60.5	55	M22
1 5/8	UKFL310D1;HS2310										
1 11/16	UKFL310D1;HA2310	9 7/16	7 23/64	1 7/64	3/4	1 7/8	63/64	5 1/2	2 3/8	2.165	7/8
1 3/4	UKFL310D1;HE2310X										
50	UKFL311D1;H2311X	250	198	30	20	52	25	150	64	59	M22
1 7/8	UKFL311D1;HS2311										
1 15/16	UKFL311D1;HA2311	9 27/32	7 51/64	1 3/16	25/32	2 1/16	63/64	5 29/32	2 33/64	2.323	7/8
2	UKFL311D1;HE2311XY										
55	UKFL312D1;H2312X	270	212	33	22	56	31	160	69.5	62	M27
2 1/8	UKFL312D1;HS2312	10 5/8	8 11/32	1 19/64	7/8	2 7/32	1 7/32	6 5/16	2 47/64	2.441	1

Notes (1) These numbers indicate relubricatable type. If maintenance free type is needed, please order without suffix "D1".
(2) Adapter number with suffix "X" means a narrow slot type adapter sleeve.
In this case the lock washer with the straight inner prong should be used.
(3) For HE2311XY, screw thread pitch different from the standard is applied, because of the thin thread section of sleeve.
To distinguish it, a suffix "Y" is added.
(4) If the inch series housing units with dust cover are ordered with a closed end, the suffixes E, S or A are not included.
Example: CM-UKFL305D1;HE2305

Remarks Please refer to page **A21** for size of grease fitting.

Bearing number	Housing number	Unit number (4) cast dust cover type	Nominal dimensions mm / inch t max.	A_5	L_1	L_2	Mass of unit kg / lb UKFL	C(CM)
UK305D1;H2305X	FL305D1	C(CM)-UKFL305D1;H2305X	2	56	86	40	1.0	1.3
UK305D1;HE2305	FL305D1	C(CM)-UKFL305ED1;HE2305	5/64	2 7/32	3 3/8	1 9/16	2.2	2.9
UK306D1;H2306X	FL306D1	C(CM)-UKFL306D1;H2306X	2	60	101	45	1.5	1.8
UK306D1;HS2306	FL306D1	C(CM)-UKFL306SD1;HS2306						
UK306D1;HE2306X	FL306D1	C(CM)-UKFL306ED1;HE2306X	5/64	2 3/8	3 31/32	1 25/32	3.3	4.0
UK307D1;H2307X	FL307D1	C(CM)-UKFL307D1;H2307X	3	68	110	50	1.8	2.2
UK307D1;HS2307	FL307D1	C(CM)-UKFL307SD1;HS2307	1/8	2 11/16	4 11/32	1 31/32	4.0	4.9
UK308D1;H2308X	FL308D1	C(CM)-UKFL308D1;H2308X	3	76	122	56	2.2	3.0
UK308D1;HE2308X	FL308D1	C(CM)-UKFL308ED1;HE2308X						
UK308D1;HS2308X	FL308D1	C(CM)-UKFL308SD1;HS2308X	1/8	3	4 13/16	2 7/32	4.9	6.6
UK309D1;H2309X	FL309D1	C(CM)-UKFL309D1;H2309X	3	80	135	62	3.0	3.9
UK309D1;HA2309	FL309D1	C(CM)-UKFL309AD1;HA2309						
UK309D1;HE2309X	FL309D1	C(CM)-UKFL309ED1;HE2309X	1/8	3 5/32	5 5/16	2 7/16	6.6	8.6
UK309D1;HS2309X	FL309D1	C(CM)-UKFL309SD1;HS2309X						
UK310D1;H2310X	FL310D1	C(CM)-UKFL310D1;H2310X	3	88	152	70	4.1	5.1
UK310D1;HS2310	FL310D1	C(CM)-UKFL310SD1;HS2310						
UK310D1;HA2310	FL310D1	C(CM)-UKFL310AD1;HA2310	1/8	3 15/32	5 31/32	2 3/4	9.0	11
UK310D1;HE2310X	FL310D1	C(CM)-UKFL310ED1;HE2310X						
UK311D1;H2311X	FL311D1	C(CM)-UKFL311D1;H2311X	4	92	162	75	4.6	6.0
UK311D1;HS2311	FL311D1	C(CM)-UKFL311SD1;HS2311						
UK311D1;HA2311	FL311D1	C(CM)-UKFL311AD1;HA2311	5/32	3 5/8	6 3/8	2 15/16	10	13
UK311D1;HE2311XY	FL311D1	C(CM)-UKFL311ED1;HE2311XY						
UK312D1;H2312X	FL312D1	C(CM)-UKFL312D1;H2312X	4	100	175	80	5.7	7.7
UK312D1;HS2312	FL312D1	C(CM)-UKFL312SD1;HS2312	5/32	3 15/16	6 7/8	3 5/32	13	17

Rhombus flanged unit, cast housing
Adapter type

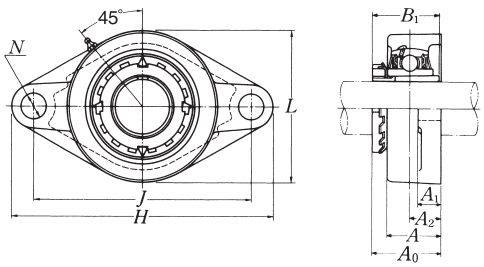

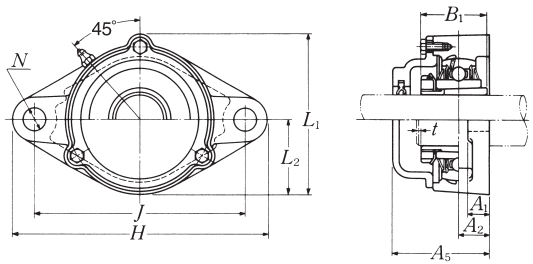

Cast dust cover type
Open end **C-UKFL···D1**
Closed end **CM-UKFL···D1**

Shaft dia. mm / inch	Unit number (1)(2)	Nominal dimensions mm / inch H	J	A_2	A_1	A	N	L	A_0	B_1	Bolt size mm / inch
60	UKFL313D1;H2313X	295	240	33	25	58	31	175	71.5	65	M27
2 3/16	UKFL313D1;HA2313										
2 1/4	UKFL313D1;HE2313X	11 5/8	9 29/64	1 19/64	31/32	2 9/32	1 7/32	6 7/8	2 13/16	2.559	1
2 3/8	UKFL313D1;HS2313X										
65	UKFL315D1;H2315X	320	260	39	30	66	35	195	81.5	73	M30
2 7/16	UKFL315D1;HA2315	12 19/32	10 15/64	1 17/32	1 3/16	2 19/32	1 3/8	7 11/16	3 13/64	2.874	1 1/8
2 1/2	UKFL315D1;HE2315X										
70	UKFL316D1;H2316X	355	285	38	32	68	38	210	84	78	M33
2 11/16	UKFL316D1;HA2316	13 31/32	11 7/32	1 1/2	1 1/4	2 11/16	1 1/2	8 9/32	3 5/16	3.071	1 1/4
2 3/4	UKFL316D1;HE2316X										
75	UKFL317D1;H2317X	370	300	44	32	74	38	220	92	82	M33
2 15/16	UKFL317D1;HA2317X	14 9/16	11 13/16	1 47/64	1 1/4	2 29/32	1 1/2	8 21/32	3 5/8	3.228	1 1/4
3	UKFL317D1;HE2317X										
80	UKFL318D1;H2318X	385	315	44	36	76	38	235	94	86	M33
3 3/16	UKFL318D1;HA2318X	15 5/32	12 13/32	1 47/64	1 13/32	3	1 1/2	9 1/4	3 45/64	3.386	1 1/4
85	UKFL319D1;H2319X	405	330	59	40	94	41	250	111.5	90	M36
3 1/4	UKFL319D1;HE2319X	15 15/16	12 63/64	2 21/64	1 9/16	3 11/16	1 39/64	9 27/32	4 25/64	3.543	1 3/8
90	UKFL320D1;H2320X	440	360	59	40	94	44	270	115.5	97	M39
3 7/16	UKFL320D1;HA2320	17 5/16	14 11/64	2 21/64	1 9/16	3 11/16	1 47/64	10 5/8	4 35/64	3.819	1 1/2
3 1/2	UKFL320D1;HE2320X										
100	UKFL322D1;H2322X	470	390	60	42	96	44	300	121	105	M39
110	UKFL324D1;H2324	520	430	65	48	110	47	330	130	112	M42
115	UKFL326D1;H2326	550	460	65	50	115	47	360	133	121	M42
125	UKFL328D1;H2328	600	500	75	60	125	51	400	146.5	131	M45

Notes (1) These numbers indicate relubricatable type. If maintenance free type is needed, please order without suffix "D1".
(2) Adapter number with suffix "X" means a narrow slot type adapter sleeve.
In this case the lock washer with the straight inner prong should be used.
(3) If the inch series housing units with dust cover are ordered with a closed end, the suffixes E, S or A are not included.
Example: CM-UKFL305D1;HE2305

Remarks Please refer to page **A21** for size of grease fitting.

Bearing number	Housing number	Unit number (3) cast dust cover type	Nominal dimensions mm / inch t max.	A_5	L_1	L_2	Mass of unit kg / lb UKFL	C(CM)
UK313D1;H2313X	FL313D1	C(CM)-UKFL313D1;H2313X	4	103	189	88	7.4	9.8
UK313D1;HA2313	FL313D1	C(CM)-UKFL313AD1;HA2313						
UK313D1;HE2313X	FL313D1	C(CM)-UKFL313ED1;HE2313X	5/32	4 1/16	7 7/16	3 15/32	16	22
UK313D1;HS2313X	FL313D1	C(CM)-UKFL313SD1;HS2313X						
UK315D1;H2315X	FL315D1	C(CM)-UKFL315D1;H2315X	4	114	210	98	9.9	13
UK315D1;HA2315	FL315D1	C(CM)-UKFL315AD1;HA2315	5/32	4 1/2	8 9/32	3 27/32	22	29
UK315D1;HE2315X	FL315D1	C(CM)-UKFL315ED1;HE2315X						
UK316D1;H2316X	FL316D1	C(CM)-UKFL316D1;H2316X	4	116	222	105	13	17
UK316D1;HA2316	FL316D1	C(CM)-UKFL316AD1;HA2316	5/32	4 9/16	8 3/4	4 1/8	29	37
UK316D1;HE2316X	FL316D1	C(CM)-UKFL316ED1;HE2316X						
UK317D1;H2317X	FL317D1	C(CM)-UKFL317D1;H2317X	5	127	234	110	15	18
UK317D1;HA2317X	FL317D1	C(CM)-UKFL317AD1;HA2317X	13/64	5	9 7/32	4 11/32	33	40
UK317D1;HE2317X	FL317D1	C(CM)-UKFL317ED1;HE2317X						
UK318D1;H2318X	FL318D1	C(CM)-UKFL318D1;H2318X	5	129	247	118	18	22
UK318D1;HA2318X	FL318D1	C(CM)-UKFL318AD1;HA2318X	13/64	5 3/32	9 23/32	4 21/32	40	49
UK319D1;H2319X	FL319D1	C(CM)-UKFL319D1;H2319X	5	149	260	125	22	27
UK319D1;HE2319X	FL319D1	C(CM)-UKFL319ED1;HE2319X	13/64	5 7/8	10 1/4	4 29/32	49	60
UK320D1;H2320X	FL320D1	C(CM)-UKFL320D1;H2320X	5	154	280	135	26	32
UK320D1;HA2320	FL320D1	C(CM)-UKFL320AD1;HA2320	13/64	6 1/16	11 1/32	5 5/16	57	71
UK320D1;HE2320X	FL320D1	C(CM)-UKFL320ED1;HE2320X						
UK322D1;H2322X	FL322D1	C(CM)-UKFL322D1;H2322X	5	160	315	150	34	41
UK324D1;H2324	FL324D1	C(CM)-UKFL324D1;H2324	5	172	342	165	47	52
UK326D1;H2326	FL326D1	C(CM)-UKFL326D1;H2326	6	178	376	180	58	65
UK328D1;H2328	FL328D1	C(CM)-UKFL328D1;H2328	6	192	410	200	82	90

Rhombus flanged unit, cast housing
Adapter type

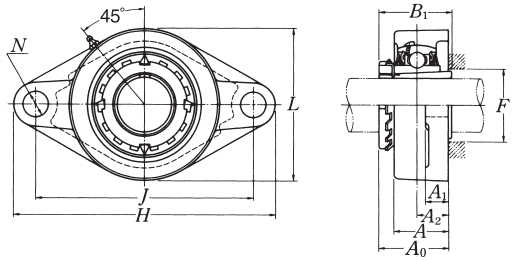

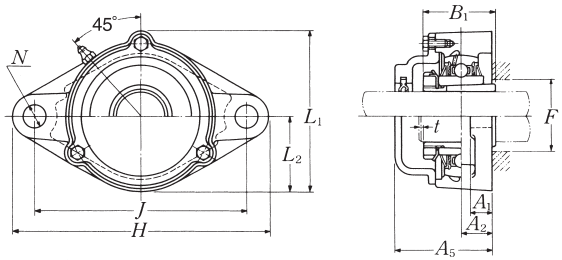

Cast dust cover type
Open end **C-UKFL···D1**
Closed end **CM-UKFL···D1**

Shaft dia. mm / inch	Unit number (1)(2)	Nominal dimensions mm / inch: H	J	A_2	A_1	A	N	L	A_0	B_1	F min.
20	UKFLX05D1;H2305X	141	117	18	13	30	12	83	39	35	–
3/4	UKFLX05D1;HE2305	5 9/16	4 39/64	45/64	1/2	1 3/16	15/32	3 9/32	1 17/32	1.378	–
25	UKFLX06D1;H2306X	156	130	19	15	34	16	95	41.5	38	–
7/8	UKFLX06D1;HS2306										
1	UKFLX06D1;HE2306X	6 5/32	5 1/8	3/4	19/32	1 11/32	5/8	3 3/4	1 41/64	1.496	–
30	UKFLX07D1;H2307X	171	144	21	16	38	16	105	45.5	43	–
1 1/8	UKFLX07D1;HS2307	6 23/32	5 43/64	53/64	5/8	1 1/2	5/8	4 1/8	1 51/64	1.693	–
35	UKFLX08D1;H2308X	179	148	22	16	40	16	111	47.5	46	46
1 1/4	UKFLX08D1;HE2308X										
1 3/8	UKFLX08D1;HS2308X	7 1/16	5 53/64	55/64	5/8	1 9/16	5/8	4 3/8	1 7/8	1.811	1 13/16
40	UKFLX09D1;H2309X	189	157	23	16	40	16	116	50	50	52
1 7/16	UKFLX09D1;HA2309										
1 1/2	UKFLX09D1;HE2309X	7 7/16	6 3/16	29/32	5/8	1 9/16	5/8	4 9/16	1 31/32	1.969	2 1/16
1 5/8	UKFLX09D1;HS2309X										
45	UKFLX10D1;H2310X	216	184	26	18	44	19	133	55.5	55	57
1 5/8	UKFLX10D1;HS2310										
1 11/16	UKFLX10D1;HA2310	8 1/2	7 1/4	1 1/32	23/32	1 23/32	3/4	5 1/4	2 3/16	2.165	2 1/4
1 3/4	UKFLX10D1;HE2310X										

Bolt size mm / inch	Bearing number	Housing number	Unit number (3) cast dust cover type	Nominal dimensions mm / inch: t max.	A_5	L_1	L_2	Mass of unit kg / lb: UKF	C(CM)
M10	UKX05D1;H2305X	FLX05D1	C(CM)-UKFLX05D1;H2305X	2	56	86	41.5	1.0	1.2
3/8	UKX05D1;HE2305	FLX05D1	C(CM)-UKFLX05ED1;HE2305	5/64	2 7/32	3 3/8	1 5/8	2.2	2.7
M14	UKX06D1;H2306X	FLX06D1	C(CM)-UKFLX06D1;H2306X	2	59	98.5	47.5	1.4	1.6
	UKX06D1;HS2306	FLX06D1	C(CM)-UKFLX06SD1;HS2306						
1/2	UKX06D1;HE2306X	FLX06D1	C(CM)-UKFLX06ED1;HE2306X	5/64	2 5/16	3 7/8	1 7/8	3.1	3.5
M14	UKX07D1;H2307X	FLX07D1	C(CM)-UKFLX07D1;H2307X	3	66	108.5	52.5	1.8	2.2
1/2	UKX07D1;HS2307	FLX07D1	C(CM)-UKFLX07SD1;HS2307	1/8	2 19/32	4 9/32	2 1/16	4.0	4.9
M14	UKX08D1;H2308X	FLX08D1	C(CM)-UKFLX08D1;H2308X	3	70	114.5	55.5	2.2	2.6
	UKX08D1;HE2308X	FLX08D1	C(CM)-UKFLX08ED1;HE2308X						
1/2	UKX08D1;HS2308X	FLX08D1	C(CM)-UKFLX08SD1;HS2308X	1/8	2 3/4	4 1/4	2 3/16	4.9	5.7
M14	UKX09D1;H2309X	FLX09D1	C(CM)-UKFLX09D1;H2309X	3	73	119.5	58	2.2	2.7
	UKX09D1;HA2309	FLX09D1	C(CM)-UKFLX09AD1;HA2309						
1/2	UKX09D1;HE2309X	FLX09D1	C(CM)-UKFLX09ED1;HE2309X	1/8	2 7/8	4 23/32	2 9/32	4.9	6.0
	UKX09D1;HS2309X	FLX09D1	C(CM)-UKFLX09SD1;HS2309X						
M16	UKX10D1;H2310X	FLX10D1	C(CM)-UKFLX10D1;H2310X	3	76	133.5	66.5	3.1	3.6
	UKX10D1;HS2310	FLX10D1	C(CM)-UKFLX10SD1;HS2310						
5/8	UKX10D1;HA2310	FLX10D1	C(CM)-UKFLX10AD1;HA2310	1/8	3	5 1/4	2 5/8	6.8	7.9
	UKX10D1;HE2310X	FLX10D1	C(CM)-UKFLX10ED1;HE2310X						

Notes (1) These numbers indicate relubricatable type. If maintenance free type is needed, please order without suffix "D1".
(2) Adapter number with suffix "X" means a narrow slot type adapter sleeve.
In this case the lock washer with the straight inner prong should be used.
(3) If the inch series housing units with dust cover are ordered with a closed end, the suffixes E, S or A are not included.
Example: CM-UKFLX05D1;HE2305

Remarks Please refer to page **A21** for size of grease fitting.

Take-up unit, cast housing
Adapter type

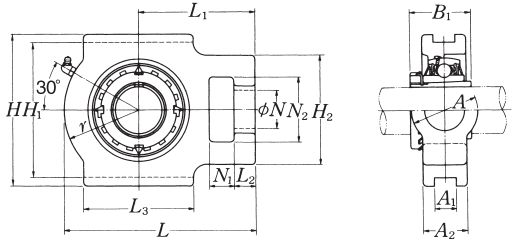

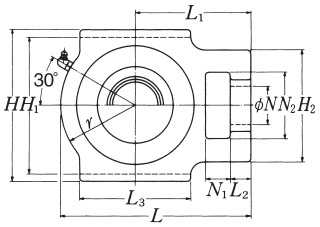

Pressed steel dust cover type
Open end **Z-UKT···D1**
Closed end **ZM-UKT···D1**

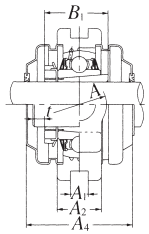

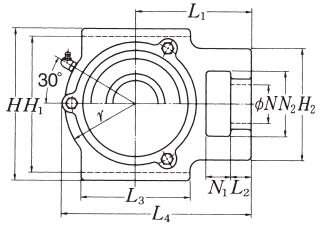

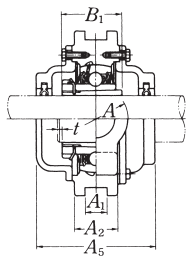

Cast dust cover type
Open end **C-UKT···D1**
Closed end **CM-UKT···D1**

Shaft dia. mm / inch	Unit number (1)(2)(3)	Nominal dimensions mm / inch N_1	L_2	H_2	N_2	N	L_3	A_1	H_1	H	L	A_2	A	r	L_1	B_1	Bearing number
20	UKT205D1;H2305X	16	12	51	32	19	51	12	76	89	97	24	32	35	62	35	UK205D1;H2305X
3/4	UKT205D1;HE2305	5/8	15/32	2	1 1/4	3/4	2	0.472	2 63/64	3 1/2	3 13/16	15/16	1 1/4	1 3/8	2 7/16	1.378	UK205D1;HE2305
25	UKT206D1;H2306X	16	12	56	37	22	57	12	89	102	113	28	37	43	70	38	UK206D1;H2306X
7/8	UKT206D1;HS2306	5/8	15/32	2 7/32	1 15/32	7/8	2 1/4	0.472	3 1/2	4 1/32	4 7/16	1 3/32	1 15/32	1 11/16	2 3/4	1.496	UK206D1;HS2306
1	UKT206D1;HE2306X																UK206D1;HE2306X
30	UKT207D1;H2307X	16	15	64	37	22	64	12	89	102	129	30	37	51	78	43	UK207D1;H2307X
1 1/8	UKT207D1;HS2307	5/8	19/32	2 17/32	1 15/32	7/8	2 17/32	0.472	3 1/2	4 1/32	5 3/32	1 3/16	1 15/32	2	3 1/16	1.693	UK207D1;HS2307
35	UKT208D1;H2308X	19	18	83	49	29	83	16	102	114	144	33	49	56	88	46	UK208D1;H2308X
1 1/4	UKT208D1;HE2308X	3/4	23/32	3 9/32	1 15/16	1 5/32	3 9/32	0.630	4 1/64	4 1/2	5 21/32	1 5/16	1 15/16	2 7/32	3 15/32	1.811	UK208D1;HE2308X
1 3/8	UKT208D1;HS2308X																UK208D1;HS2308X
40	UKT209D1;H2309X	19	18	83	49	29	83	16	102	117	145	35	49	57	88	50	UK209D1;H2309X
1 7/16	UKT209D1;HA2309																UK209D1;HA2309
1 1/2	UKT209D1;HE2309X	3/4	23/32	3 9/32	1 15/16	1 5/32	3 9/32	0.630	4 1/64	4 19/32	5 23/32	1 3/8	1 15/16	2 1/4	3 15/32	1.969	UK209D1;HE2309X
1 5/8	UKT209D1;HS2309X																UK209D1;HS2309X
45	UKT210D1;H2310X	19	18	83	49	29	86	16	102	117	151	37	49	59	92	55	UK210D1;H2310X
1 5/8	UKT210D1;HS2310																UK210D1;HS2310
1 11/16	UKT210D1;HA2310	3/4	23/32	3 9/32	1 15/16	1 5/32	3 3/8	0.630	4 1/64	4 19/32	5 15/16	1 15/32	1 15/16	2 5/16	3 5/8	2.165	UK210D1;HA2310
1 3/4	UKT210D1;HE2310X																UK210D1;HE2310X
50	UKT211D1;H2311X	25	21	102	64	35	95	22	130	146	171	38	64	65	106	59	UK211D1;H2311X
1 7/8	UKT211D1;HS2311																UK211D1;HS2311
1 15/16	UKT211D1;HA2311	31/32	13/16	4 1/32	2 17/32	1 3/8	3 3/4	0.866	5 1/8	5 3/4	6 23/32	1 1/2	2 17/32	2 9/16	4 3/16	2.323	UK211D1;HA2311
2	UKT211D1;HE2311XY																UK211D1;HE2311XY
55	UKT212D1;H2312X	32	21	102	64	35	102	22	130	146	194	42	64	75	119	62	UK212D1;H2312X
2 1/8	UKT212D1;HS2312	1 1/4	13/16	4 1/32	2 17/32	1 3/8	4 1/32	0.866	5 1/8	5 3/4	7 5/8	1 21/32	2 17/32	2 15/16	4 11/16	2.441	UK212D1;HS2312

Notes (1) These numbers indicate relubricatable type. If maintenance free type is needed, please order without suffix "D1".
(2) Adapter number with suffix "X" means a narrow slot type adapter sleeve.
In this case the lock washer with the straight inner prong should be used.
(3) For HE2311XY, screw thread pitch different from the standard is applied, because of the thin thread section of sleeve.
To distinguish it, a suffix "Y" is added.

Remarks Please refer to page **A21** for size of grease fitting.

Housing number	Unit number pressed steel dust cover type	Unit number cast dust cover type	Nominal dimensions mm / inch t max.	A_4	L_4	A_5	Mass of unit kg / lb UKT	Z(ZM)	C(CM)
T205D1	Z(ZM)-UKT205D1;H2305X	C(CM)-UKT205D1;H2305X	2	48	100.5	70	0.9	0.9	1.2
T205D1	Z(ZM)-UKT205ED1;HE2305	C(CM)-UKT205ED1;HE2305	5/8	1 29/32	3 31/32	2 3/4	2.0	2.0	2.6
T206D1	Z(ZM)-UKT206D1;H2306X	C(CM)-UKT206D1;H2306X	2	53	113.5	75	1.3	1.4	1.8
T206D1	Z(ZM)-UKT206SD1;HS2306	C(CM)-UKT206SD1;HS2306	5/64	2 3/32	4 15/32	2 15/16	2.9	3.1	4.0
T206D1	Z(ZM)-UKT206ED1;HE2306X	C(CM)-UKT206ED1;HE2306X							
T207D1	Z(ZM)-UKT207D1;H2307X	C(CM)-UKT207D1;H2307X	3	60	129	80	1.7	1.8	2.2
T207D1	Z(ZM)-UKT207SD1;HS2307	C(CM)-UKT207SD1;HS2307	1/8	2 11/32	5 3/32	3 5/32	3.7	4.0	4.9
T208D1	Z(ZM)-UKT208D1;H2308X	C(CM)-UKT208D1;H2308X	3	69	144	90	2.5	2.6	3.3
T208D1	Z(ZM)-UKT208ED1;HE2308X	C(CM)-UKT208ED1;HE2308X	1/8	2 23/32	5 21/32	3 17/32	5.5	5.7	7.3
T208D1	Z(ZM)-UKT208SD1;HS2308X	C(CM)-UKT208SD1;HS2308X							
T209D1	Z(ZM)-UKT209D1;H2309X	C(CM)-UKT209D1;H2309X	3	69	145.5	95	2.5	2.6	3.5
T209D1	Z(ZM)-UKT209AD1;HA2309	C(CM)-UKT209AD1;HA2309							
T209D1	Z(ZM)-UKT209ED1;HE2309X	C(CM)-UKT209ED1;HE2309X	1/8	2 23/32	5 23/32	3 3/4	5.5	5.7	7.7
T209D1	Z(ZM)-UKT209SD1;HS2309X	C(CM)-UKT209SD1;HS2309X							
T210D1	Z(ZM)-UKT210D1;H2310X	C(CM)-UKT210D1;H2310X	3	76	152	100	2.7	2.8	3.8
T210D1	Z(ZM)-UKT210SD1;HS2310	C(CM)-UKT210SD1;HS2310							
T210D1	Z(ZM)-UKT210AD1;HA2310	C(CM)-UKT210AD1;HA2310	1/8	3	5 31/32	3 15/16	6.0	6.2	8.4
T210D1	Z(ZM)-UKT210ED1;HE2310X	C(CM)-UKT210ED1;HE2310X							
T211D1	Z(ZM)-UKT211D1;H2311X	C(CM)-UKT211D1;H2311X	4	77	171.5	100	4.1	4.3	5.3
T211D1	Z(ZM)-UKT211SD1;HS2311	C(CM)-UKT211SD1;HS2311							
T211D1	Z(ZM)-UKT211AD1;HA2311	C(CM)-UKT211AD1;HA2311	5/32	3 1/32	6 3/4	3 15/16	9.0	9.5	12
T211D1	Z(ZM)-UKT211ED1;HE2311XY	C(CM)-UKT211ED1;HE2311XY							
T212D1	Z(ZM)-UKT212D1;H2312X	C(CM)-UKT212D1;H2312X	4	89	194	115	4.9	5.2	6.3
T212D1	Z(ZM)-UKT212SD1;HS2312	C(CM)-UKT212SD1;HS2312	5/32	3 1/2	7 5/8	4 17/32	11	11	14

Take-up unit, cast housing
Adapter type

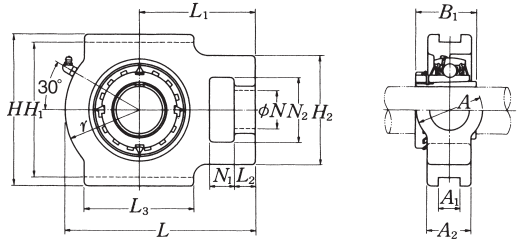

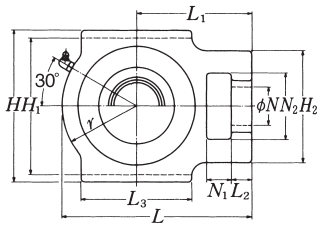

Pressed steel dust cover type
Open end **Z-UKT···D1**
Closed end **ZM-UKT···D1**

Shaft dia. mm / inch	Unit number (1)(2)	Nominal dimensions mm / inch N_1	L_2	H_2	N_2	N	L_3	A_1	H_1	H	L	A_2	A	r	L_1	B_1	Bearing number
60	UKT213D1;H2313X	32	23	111	70	41	121	26	151	167	224	44	70	87	137	65	UK213D1;H2313X
2 3/16	UKT213D1;HA2313																UK213D1;HA2313
2 1/4	UKT213D1;HE2313X	1 1/4	29/32	4 3/8	2 3/4	1 5/8	4 3/4	1.024	5 15/16	6 9/16	8 13/16	1 23/32	2 3/4	3 7/16	5 13/32	2.559	UK213D1;HE2313X
2 3/8	UKT213D1;HS2313X																UK213D1;HS2313X
65	UKT215D1;H2315X	32	23	111	70	41	121	26	151	167	232	48	70	92	140	73	UK215D1;H2315X
2 7/16	UKT215D1;HA2315	1 1/4	29/32	4 3/8	2 3/4	1 5/8	4 3/4	1.024	5 15/16	6 9/16	9 1/8	1 7/8	2 3/4	3 5/8	5 1/2	2.874	UK215D1;HA2315
2 1/2	UKT215D1;HE2315X																UK215D1;HE2315X
70	UKT216D1;H2316X	32	23	111	70	41	121	26	165	184	235	51	70	95	140	78	UK216D1;H2316X
2 11/16	UKT216D1;HA2316	1 1/4	29/32	4 3/8	2 3/4	1 5/8	4 3/4	1.024	6 1/2	7 1/4	9 1/4	2	2 3/4	3 3/4	5 1/2	3.071	UK216D1;HA2316
2 3/4	UKT216D1;HE2316X																UK216D1;HE2316X
75	UKT217D1;H2317X	38	31	124	73	48	157	30	173	198	260	54	73	98	162	82	UK217D1;H2317X
2 15/16	UKT217D1;HA2317X	1 1/2	1 7/32	4 7/8	2 7/8	1 7/8	6 3/16	1.181	6 13/16	7 25/32	10 1/4	2 1/8	2 7/8	3 27/32	6 3/8	3.228	UK217D1;HA2317X
3	UKT217D1;HE2317X																UK217D1;HE2317X

Notes (1) These numbers indicate relubricatable type. If maintenance free type is needed, please order without suffix "D1".
(2) Adapter number with suffix "X" means a narrow slot type adapter sleeve.
In this case the lock washer with the straight inner prong should be used.
Remarks Please refer to page **A21** for size of grease fitting.

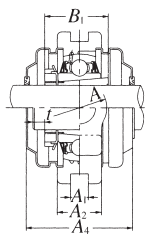

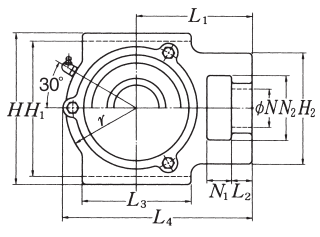

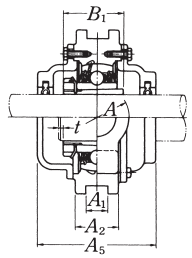

Cast dust cover type
Open end **C-UKT···D1**
Closed end **CM-UKT···D1**

Housing number	Unit number pressed steel dust cover type	Unit number cast dust cover type	Nominal dimensions mm / inch t max.	A_4	L_4	A_5	Mass of unit kg / lb UKT	Z(ZM)	C(CM)
T213D1	Z(ZM)-UKT213D1;H2313X	C(CM)-UKT213D1;H2313X	4	91	224	120	7.1	7.4	8.8
T213D1	Z(ZM)-UKT213AD1;HA2313	C(CM)-UKT213AD1;HA2313							
T213D1	Z(ZM)-UKT213ED1;HE2313X	C(CM)-UKT213ED1;HE2313X	5/32	3 19/32	8 13/16	4 23/32	16	16	19
T213D1	Z(ZM)-UKT213SD1;HS2313X	C(CM)-UKT213SD1;HS2313X							
T215D1	–	C(CM)-UKT215D1;H2315X	4	–	232	135	7.7	–	10
T215D1	–	C(CM)-UKT215AD1;HA2315	5/32	–	9 1/8	5 5/16	17	–	22
T215D1		C(CM)-UKT215ED1;HE2315X							
T216D1	–	C(CM)-UKT216D1;H2316X	4	–	235	145	8.7	–	12
T216D1	–	C(CM)-UKT216AD1;HA2316	5/32	–	9 1/4	5 23/32	19	–	26
T216D1		C(CM)-UKT216ED1;HE2316X							
T217D1	–	C(CM)-UKT217D1;H2317X	5	–	260	155	11	–	15
T217D1	–	C(CM)-UKT217AD1;HA2317X	13/64	–	10 1/4	6 3/32	24	–	33
T217D1		C(CM)-UKT217ED1;HE2317X							

Take-up unit, cast housing
Adapter type

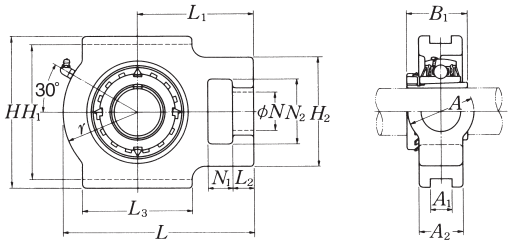

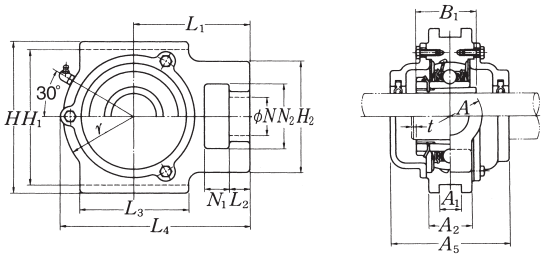

Cast dust cover type
Open end **C-UKT···D1**
Closed end **CM-UKT···D1**

Shaft dia. mm / inch	Unit number (1)(2)(3)	Nominal dimensions mm / inch N_1	L_2	H_2	N_2	N	L_3	A_1	H_1	H	L	A_2	A	r	L_1	B_1
20	UKT305D1;H2305X	16	14	62	36	26	65	12	80	89	122	26	36	46	76	35
3/4	UKT305D1;HE2305	5/8	9/16	2 7/16	1 13/32	1 1/32	2 9/16	0.472	2 5/32	3 1/2	4 13/16	1 1/32	1 13/32	1 13/16	3	1.378
25	UKT306D1;H2306X	18	16	70	41	28	74	16	90	100	137	28	41	52	85	38
7/8	UKT306D1;HS2306	23/32	5/8	2 3/4	1 5/8	1 3/32	2 29/32	0.630	3 35/64	3 15/16	5 13/32	1 3/32	1 5/8	2 1/16	3 11/32	1.496
1	UKT306D1;HE2306X															
30	UKT307D1;H2307X	20	17	75	45	30	80	16	100	111	150	32	45	56	94	43
1 1/8	UKT307D1;HS2307	25/32	21/32	2 15/16	1 25/32	1 3/16	3 5/32	0.630	3 15/16	4 3/8	5 29/32	1 1/4	1 25/32	2 7/16	3 11/16	1.693
35	UKT308D1;H2308X	22	19	83	50	32	89	18	112	124	162	34	50	62	100	46
1 1/4	UKT308D1;HE2308X	7/8	3/4	3 9/32	1 31/32	1 1/4	3 1/2	0.709	4 13/32	4 7/8	6 3/8	1 11/32	1 31/32	2 7/16	3 15/16	1.811
1 3/8	UKT308D1;HS2308X															
40	UKT309D1;H2309X	24	20	90	55	34	97	18	125	138	178	38	55	68	110	50
1 7/16	UKT309D1;HA2309															
1 1/2	UKT309D1;HE2309X	15/16	25/32	3 17/32	2 5/32	1 11/32	3 13/16	0.709	4 59/64	5 7/16	7	1 1/2	2 5/32	2 11/16	4 11/32	1.969
1 5/8	UKT309D1;HS2309X															
45	UKT310D1;H2310X	27	22	98	61	37	106	20	140	151	192	40	61	74	118	55
1 5/8	UKT310D1;HS2310															
1 11/16	UKT310D1;HA2310	1 1/16	7/8	3 27/32	2 13/32	1 15/32	4 3/16	0.787	5 33/64	5 15/16	7 9/16	1 9/16	2 13/32	2 29/32	4 21/32	2.165
1 3/4	UKT310D1;HE2310X															
50	UKT311D1;H2311X	29	23	105	66	39	115	22	150	163	207	44	66	80	127	59
1 7/8	UKT311D1;HS2311															
1 15/16	UKT311D1;HA2311	1 5/32	29/32	4 1/8	2 19/32	1 17/32	4 17/32	0.866	5 29/32	6 13/32	8 5/32	1 23/32	2 19/32	3 5/32	5	2.323
2	UKT311D1;HE2311XY															
55	UKT312D1;H2312X	31	25	113	71	41	123	22	160	178	220	46	71	85	135	62
2 1/8	UKT312D1;HS2312	1 7/32	31/32	4 7/16	2 25/32	1 5/8	4 27/32	0.866	6 19/64	7	8 21/32	1 13/16	2 25/32	3 11/32	5 5/16	2.441

Bearing number	Housing number	Unit number cast dust cover type	Nominal dimensions mm / inch t max.	L_4	A_5	Mass of unit kg / lb UKT	C(CM)
UK305D1;H2305X	T305D1	C(CM)-UKT305D1;H2305X	2	122	80	1.4	1.9
UK305D1;HE2305	T305D1	C(CM)-UKT305ED1;HE2305	5/64	4 13/16	3 5/32	3.1	4.2
UK306D1;H2306X	T306D1	C(CM)-UKT306D1;H2306X	2	139	85	1.8	2.5
UK306D1;HS2306	T306D1	C(CM)-UKT306SD1;HS2306	5/64	5 31/32	3 11/32	4.0	5.5
UK306D1;HE2306X	T306D1	C(CM)-UKT306ED1;HE2306X					
UK307D1;H2307X	T307D1	C(CM)-UKT307D1;H2307X	3	152	95	2.4	3.3
UK307D1;HS2307	T307D1	C(CM)-UKT307SD1;HS2307	1/8	5 31/32	3 3/4	5.3	7.3
UK308D1;H2308X	T308D1	C(CM)-UKT308D1;H2308X	3	164	105	3.0	4.3
UK308D1;HE2308X	T308D1	C(CM)-UKT308ED1;HE2308X	1/8	6 15/32	4 1/8	6.6	9.5
UK308D1;HS2308X	T308D1	C(CM)-UKT308SD1;HS2308X					
UK309D1;H2309X	T309D1	C(CM)-UKT309D1;H2309X	3	181	110	4.0	5.6
UK309D1;HA2309	T309D1	C(CM)-UKT309AD1;HA2309					
UK309D1;HE2309X	T309D1	C(CM)-UKT309ED1;HE2309X	1/8	7 1/8	4 11/32	8.8	12
UK309D1;HS2309X	T309D1	C(CM)-UKT309SD1;HS2309X					
UK310D1;H2310X	T310D1	C(CM)-UKT310D1;H2310X	3	197	120	5.1	7.1
UK310D1;HS2310	T310D1	C(CM)-UKT310SD1;HS2310					
UK310D1;HA2310	T310D1	C(CM)-UKT310AD1;HA2310	1/8	7 3/4	4 23/32	11	16
UK310D1;HE2310X	T310D1	C(CM)-UKT310ED1;HE2310X					
UK311D1;H2311X	T311D1	C(CM)-UKT311D1;H2311X	4	211	125	6.3	8.6
UK311D1;HS2311	T311D1	C(CM)-UKT311SD1;HS2311					
UK311D1;HA2311	T311D1	C(CM)-UKT311AD1;HA2311	5/32	8 5/16	4 29/32	14	19
UK311D1;HE2311XY	T311D1	C(CM)-UKT311ED1;HE2311XY					
UK312D1;H2312X	T312D1	C(CM)-UKT312D1;H2312X	4	227	135	7.6	10
UK312D1;HS2312	T312D1	C(CM)-UKT312SD1;HS2312	5/32	8 15/16	5 5/16	17	22

Notes (1) These numbers indicate relubricatable type. If maintenance free type is needed, please order without suffix "D1".
(2) Adapter number with suffix "X" means a narrow slot type adapter sleeve.
In this case the lock washer with the straight inner prong should be used.
(3) For HE2311XY, screw thread pitch different from the standard is applied, because of the thin thread section of sleeve.
To distinguish it, a suffix "Y" is added.

Remarks Please refer to page **A21** for size of grease fitting.

Take-up unit, cast housing
Adapter type

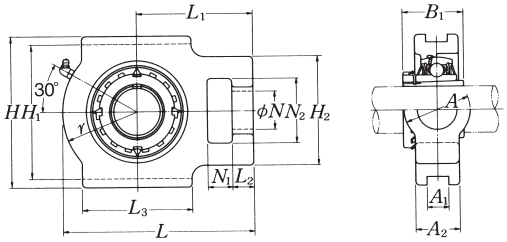

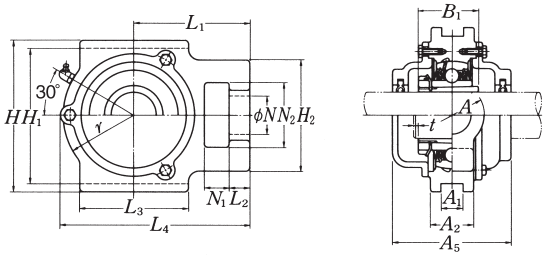

Cast dust cover type
Open end **C-UKT···D1**
Closed end **CM-UKT···D1**

Shaft dia. mm inch	Unit number (1)(2)	Nominal dimensions mm inch N_1	L_2	H_2	N_2	N	L_3	A_1	H_1	H	L	A_2	A	r	L_1	B_1
60	UKT313D1;H2313X	32	27	116	70	43	134	26	170	190	238	50	80	92	146	65
2 3/16	UKT313D1;HA2313															
2 1/4	UKT313D1;HE2313X	1 1/4	1 1/16	4 9/16	2 3/4	1 11/16	5 9/32	1.024	6 11/16	7 15/32	9 3/8	1 31/32	3 5/32	3 5/8	5 3/4	2.559
2 3/8	UKT313D1;HS2313X															
65	UKT315D1;H2315X	36	27	132	85	46	150	26	192	216	262	55	90	102	160	73
2 7/16	UKT315D1;HA2315	1 13/32	1 1/16	5 3/16	3 11/32	1 13/16	5 29/32	1.024	7 9/16	8 1/2	10 5/16	2 5/32	3 17/32	4 1/32	6 5/16	2.874
2 1/2	UKT315D1;HE2315X															
70	UKT316D1;H2316X	42	30	150	98	53	160	30	204	230	282	60	102	108	174	78
2 11/16	UKT316D1;HA2316	1 21/32	1 3/16	5 29/32	3 27/32	2 3/32	6 5/16	1.181	8 1/32	9 1/16	11 3/32	2 3/8	4 1/32	4 1/4	6 27/32	3.071
2 3/4	UKT316D1;HE2316X															
75	UKT317D1;H2317X	42	32	152	98	53	170	32	214	240	298	64	102	115	183	82
2 15/16	UKT317D1;HA2317X	1 21/32	1 1/4	5 31/32	3 27/32	2 3/32	6 11/16	1.260	8 27/64	9 7/16	11 23/32	2 17/32	4 1/32	4 17/32	7 7/32	3.228
3	UKT317D1;HE2317X															
80	UKT318D1;H2318X	46	32	160	106	57	175	32	228	255	312	66	110	120	192	86
3 3/16	UKT318D1;HA2318X	1 13/16	1 1/4	6 5/16	4 3/16	2 1/4	6 7/8	1.260	8 31/32	10 1/32	12 9/32	2 19/32	4 11/32	4 23/32	7 9/16	3.386
85	UKT319D1;H2319X	46	33	165	106	57	180	35	240	270	322	72	110	125	197	90
3 1/4	UKT319D1;HE2319X	1 13/16	1 5/16	6 1/2	4 3/16	2 1/4	7 3/32	1.378	9 29/64	10 5/8	12 11/16	2 27/32	4 11/32	4 29/32	7 3/4	3.543
90	UKT320D1;H2320X	48	34	175	115	59	200	35	260	290	345	75	120	135	210	97
3 7/16	UKT320D1;HA2320	1 7/8	1 11/32	6 7/8	4 17/32	2 5/16	7 7/8	1.378	10 15/64	11 13/32	13 19/32	2 15/16	4 23/32	5 5/16	8 9/32	3.819
3 1/2	UKT320D1;HE2320X															
100	UKT322D1;H2322X	52	40	185	125	65	215	38	285	320	385	80	130	150	235	105
110	UKT324D1;H2324	60	44	210	140	70	230	45	320	355	432	90	140	165	267	112
115	UKT326D1;H2326	65	47	220	150	75	240	50	350	385	465	100	150	180	285	121
125	UKT328D1;H2328	70	52	230	160	80	255	50	380	415	515	100	155	200	315	131

Notes (1) These numbers indicate relubricatable type. If maintenance free type is needed, please order without suffix "D1".
(2) Adapter number with suffix "X" means a narrow slot type adapter sleeve.
In this case the lock washer with the straight inner prong should be used.
Remarks Please refer to page **A21** for size of grease fitting.

Bearing number	Housing number	Unit number cast dust cover type	Nominal dimensions mm inch t max.	L_4	A_5	Mass of unit kg lb UKT	C(CM)
UK313D1;H2313X	T313D1	C(CM)-UKT313D1;H2313X	4	244	140	9.2	12
UK313D1;HA2313	T313D1	C(CM)-UKT313AD1;HA2313					
UK313D1;HE2313X	T313D1	C(CM)-UKT313ED1;HE2313X	5/32	9 19/32	5 1/2	20	26
UK313D1;HS2313X	T313D1	C(CM)-UKT313SD1;HS2313X					
UK315D1;H2315X	T315D1	C(CM)-UKT315D1;H2315X	4	268	150	13	17
UK315D1;HA2315	T315D1	C(CM)-UKT315AD1;HA2315	5/32	10 9/16	5 29/32	29	37
UK315D1;HE2315X	T315D1	C(CM)-UKT315ED1;HE2315X					
UK316D1;H2316X	T316D1	C(CM)-UKT316D1;H2316X	4	287	155	16	21
UK316D1;HA2316	T316D1	C(CM)-UKT316AD1;HA2316	5/32	11 5/16	6 3/32	35	46
UK316D1;HE2316X	T316D1	C(CM)-UKT316ED1;HE2316X					
UK317D1;H2317X	T317D1	C(CM)-UKT317D1;H2317X	5	303	170	19	25
UK317D1;HA2317X	T317D1	C(CM)-UKT317AD1;HA2317X	13/64	11 15/16	6 11/16	42	55
UK317D1;HE2317X	T317D1	C(CM)-UKT317ED1;HE2317X					
UK318D1;H2318X	T318D1	C(CM)-UKT318D1;H2318X	5	317	170	21	28
UK318D1;HA2318X	T318D1	C(CM)-UKT318AD1;HA2318X	13/64	12 15/32	6 11/16	46	62
UK319D1;H2319X	T319D1	C(CM)-UKT319D1;H2319X	5	327	180	25	32
UK319D1;HE2319X	T319D1	C(CM)-UKT319ED1;HE2319X	13/64	12 7/8	7 3/32	55	71
UK320D1;H2320X	T320D1	C(CM)-UKT320D1;H2320X	5	350	190	30	39
UK320D1;HA2320	T320D1	C(CM)-UKT320AD1;HA2320	13/64	13 25/32	7 15/32	66	86
UK320D1;HE2320X	T320D1	C(CM)-UKT320ED1;HE2320X					
UK322D1;H2322X	T322D1	C(CM)-UKT322D1;H2322X	5	395	200	40	51
UK324D1;H2324	T324D1	C(CM)-UKT324D1;H2324	5	439	215	43	69
UK326D1;H2326	T326D1	C(CM)-UKT326D1;H2326	6	476	225	69	85
UK328D1;H2328	T328D1	C(CM)-UKT328D1;H2328	6	519	235	88	107

Take-up unit, cast housing
Adapter type

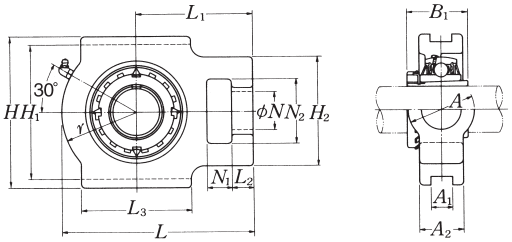

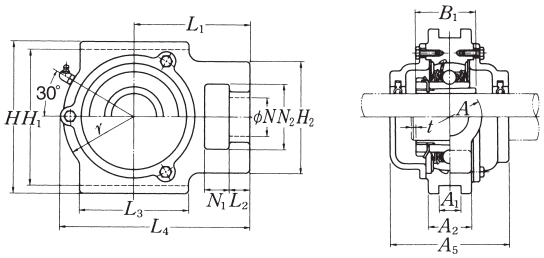

Cast dust cover type
Open end **C-UKT…D1**
Closed end **CM-UKT…D1**

Shaft dia. mm / inch	Unit number (1)(2)(3)	Nominal dimensions mm / inch N_1	L_2	H_2	N_2	N	L_3	A_1	H_1	H	L	A_2	A	r	L_1	B_1
20	UKTX05D1;H2305X	16	12	56	37	22	57	12	89	102	113	28	37	43	70	35
3/4	UKTX05D1;HE2305	5/8	15/32	2 7/32	1 15/32	7/8	2 1/4	0.472	3 1/2	4 1/32	4 7/16	1 3/32	1 15/32	1 11/16	2 3/4	1.378
25	UKTX06D1;H2306X	16	15	64	37	22	64	12	89	102	129	30	37	51	78	38
7/8	UKTX06D1;HS2306	5/8	19/32	2 17/32	1 15/32	7/8	2 17/32	0.472	3 1/2	4 1/32	5 3/32	1 3/16	1 15/32	2	3 1/16	1.496
1	UKTX06D1;HE2306X															
30	UKTX07D1;H2307X	19	17	83	49	29	83	16	102	114	144	36	49	56	88	43
1 1/8	UKTX07D1;HS2307	3/4	21/32	3 9/32	1 15/16	1 5/32	3 9/32	0.630	4 1/64	4 1/2	5 21/32	1 13/32	1 15/16	2 7/32	3 15/32	1.693
35	UKTX08D1;H2308X	19	17	83	49	29	83	16	102	117	144	36	49	57	87	46
1 1/4	UKTX08D1;HE2308X	3/4	21/32	3 9/32	1 15/16	1 5/32	3 9/32	0.630	4 1/64	4 19/32	5 21/32	1 13/32	1 15/16	2 1/4	3 7/16	1.811
1 3/8	UKTX08D1;HS2308X															
40	UKTX09D1;H2309X	19	18	83	49	29	86	16	102	117	151	38	49	59	92	50
1 7/16	UKTX09D1;HA2309															
1 1/2	UKTX09D1;HE2309X	3/4	23/32	3 9/32	1 15/16	1 5/32	3 3/8	0.630	4 1/64	4 19/32	5 15/16	1 1/2	1 15/16	2 5/16	3 5/8	1.969
1 5/8	UKTX09D1;HS2309X															
45	UKTX10D1;H2310X	25	21	102	64	35	95	22	130	146	171	42	64	65	106	55
1 5/8	UKTX10D1;HS2310															
1 11/16	UKTX10D1;HA2310	31/32	13/16	4 1/32	2 17/32	1 3/8	3 3/4	0.866	5 1/8	5 3/4	6 23/32	1 21/32	2 17/32	2 9/16	4 3/16	2.165
1 3/4	UKTX10D1;HE2310X															
50	UKTX11D1;H2311X	32	21	102	64	35	102	22	130	146	194	44	64	75	119	59
1 7/8	UKTX11D1;HS2311															
1 15/16	UKTX11D1;HA2311	1 1/4	13/16	4 1/32	2 17/32	1 3/8	4 1/32	0.866	5 1/8	5 3/4	7 5/8	1 23/32	2 17/32	2 15/16	4 11/16	2.323
2	UKTX11D1;HE2311XY															
55	UKTX12D1;H2312X	32	23	111	70	41	121	26	151	167	224	48	70	87	137	62
2 1/8	UKTX12D1;HS2312	1 1/4	29/32	4 3/8	2 3/4	1 5/8	4 3/4	1.024	5 15/16	6 9/16	8 13/16	1 7/8	2 3/4	3 7/16	5 13/32	2.441

Bearing number	Housing number	Unit number cast dust cover type	Nominal dimensions mm / inch t max.	L_4	A_5	Mass of unit kg / lb UKT	C(CM)
UKX05D1;H2305X	TX05D1	C(CM)-UKTX05D1;H2305X	2	113.5	75	1.3	1.8
UKX05D1;HE2305	TX05D1	C(CM)-UKTX05ED1;HE2305	5/64	4 15/32	2 15/16	2.9	4.0
UKX06D1;H2306X	TX06D1	C(CM)-UKTX06D1;H2306X	2	129	80	1.7	2.2
UKX06D1;HS2306	TX06D1	C(CM)-UKTX06SD1;HS2306	5/64	5 3/32	3 5/32	3.7	4.9
UKX06D1;HE2306X	TX06D1	C(CM)-UKTX06ED1;HE2306X					
UKX07D1;H2307X	TX07D1	C(CM)-UKTX07D1;H2307X	3	144	90	2.7	3.5
UKX07D1;HS2307	TX07D1	C(CM)-UKTX07SD1;HS2307	1/8	5 21/32	3 17/32	6.0	7.7
UKX08D1;H2308X	TX08D1	C(CM)-UKTX08D1;H2308X	3	144.5	95	2.8	3.7
UKX08D1;HE2308X	TX08D1	C(CM)-UKTX08ED1;HE2308X	1/8	5 11/16	3 3/4	6.2	8.2
UKX08D1;HS2308X	TX08D1	C(CM)-UKTX08SD1;HS2308X					
UKX09D1;H2309X	TX09D1	C(CM)-UKTX09D1;H2309X	3	152	100	2.7	3.8
UKX09D1;HA2309	TX09D1	C(CM)-UKTX09AD1;HA2309					
UKX09D1;HE2309X	TX09D1	C(CM)-UKTX09ED1;HE2309X	1/8	5 31/32	3 15/16	6.0	8.4
UKX09D1;HS2309X	TX09D1	C(CM)-UKTX09SD1;HS2309X					
UKX10D1;H2310X	TX10D1	C(CM)-UKTX10D1;H2310X	3	171.5	100	4.3	5.5
UKX10D1;HS2310	TX10D1	C(CM)-UKTX10SD1;HS2310					
UKX10D1;HA2310	TX10D1	C(CM)-UKTX10AD1;HA2310	1/8	6 3/4	3 15/16	9.5	12
UKX10D1;HE2310X	TX10D1	C(CM)-UKTX10ED1;HE2310X					
UKX11D1;H2311X	TX11D1	C(CM)-UKTX11D1;H2311X	4	194	115	5.1	6.6
UKX11D1;HS2311	TX11D1	C(CM)-UKTX11SD1;HS2311					
UKX11D1;HA2311	TX11D1	C(CM)-UKTX11AD1;HA2311	5/32	7 5/8	4 17/32	11	15
UKX11D1;HE2311XY	TX11D1	C(CM)-UKTX11ED1;HE2311XY					
UKX12D1;H2312X	TX12D1	C(CM)-UKTX12D1;H2312X	4	224	120	7.2	9.0
UKX12D1;HS2312	TX12D1	C(CM)-UKTX12SD1;HS2312	5/32	8 13/16	4 23/32	16	20

Notes (1) These numbers indicate relubricatable type. If maintenance free type is needed, please order without suffix "D1".
(2) Adapter number with suffix "X" means a narrow slot type adapter sleeve.
In this case the lock washer with the straight inner prong should be used.
(3) For HE2311XY, screw thread pitch different from the standard is applied, because of the thin thread section of sleeve.
To distinguish it, a suffix "Y" is added.

Remarks Please refer to page **A21** for size of grease fitting.

Take-up unit, cast housing
Adapter type

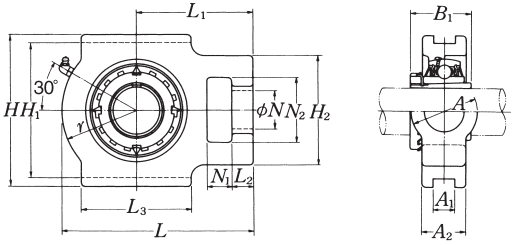

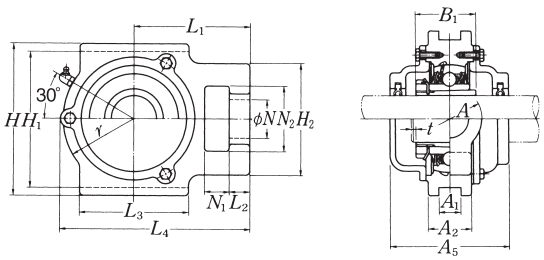

Cast dust cover type
Open end **C-UKT···D1**
Closed end **CM-UKT···D1**

Shaft dia. mm inch	Unit number (1)(2)	Nominal dimensions mm inch N_1	L_2	H_2	N_2	N	L_3	A_1	H_1	H	L	A_2	A	r	L_1	B_1
60	UKTX13D1;H2313X	32	23	111	70	41	121	26	151	167	224	48	70	87	137	65
2 3/16	UKTX13D1;HA2313															
2 1/4	UKTX13D1;HE2313X	1 1/4	29/32	4 3/8	2 3/4	1 5/8	4 3/4	1.024	5 15/16	6 9/16	8 13/16	1 7/8	2 3/4	3 7/16	5 13/32	2.559
2 3/8	UKTX13D1;HS2313X															
65	UKTX15D1;H2315X	32	23	111	70	41	121	28	165	184	235	48	70	95	140	73
2 7/16	UKTX15D1;HA2315															
2 1/2	UKTX15D1;HE2315X	1 1/4	29/32	4 3/8	2 3/4	1 5/8	4 3/4	1.102	6 1/2	7 1/4	9 1/4	1 7/8	2 3/4	3 3/4	5 1/2	2.874
70	UKTX16D1;H2316X	38	30	124	73	48	157	28	173	198	260	54	73	98	162	78
2 11/16	UKTX16D1;HA2316															
2 3/4	UKTX16D1;HE2316X	1 1/2	1 3/16	4 7/8	2 7/8	1 7/8	6 3/16	1.102	6 13/16	7 25/32	10 1/4	2 1/8	2 7/8	3 27/32	6 3/8	3.071
75	UKTX17D1;H2317X	38	30	124	73	48	157	28	173	198	260	54	73	98	162	82
2 15/16	UKTX17D1;HA2317X															
3	UKTX17D1;HE2317X	1 1/2	1 3/16	4 7/8	2 7/8	1 7/8	6 3/16	1.102	6 13/16	7 25/32	10 1/4	2 1/8	2 7/8	3 27/32	6 3/8	3.228

Notes (1) These numbers indicate relubricatable type. If maintenance free type is needed, please order without suffix "D1".
(2) Adapter number with suffix "X" means a narrow slot type adapter sleeve.
In this case the lock washer with the straight inner prong should be used.
Remarks Please refer to page **A21** for size of grease fitting.

Bearing number	Housing number	Unit number cast dust cover type	Nominal dimensions mm inch t max.	L_4	A_5	Mass of unit kg lb UKT	C(CM)
UKX13D1;H2313X	TX13D1	C(CM)-UKTX13D1;H2313X	4	224	135	7.2	9.5
UKX13D1;HA2313	TX13D1	C(CM)-UKTX13AD1;HA2313					
UKX13D1;HE2313X	TX13D1	C(CM)-UKTX13ED1;HE2313X	5/32	8 13/16	5 5/16	16	21
UKX13D1;HS2313X	TX13D1	C(CM)-UKTX13SD1;HS2313X					
UKX15D1;H2315X	TX15D1	C(CM)-UKTX15D1;H2315X	4	235	145	8.5	11
UKX15D1;HA2315	TX15D1	C(CM)-UKTX15AD1;HA2315	5/32	9 1/4	5 23/32	19	24
UKX15D1;HE2315X	TX15D1	C(CM)-UKTX15ED1;HE2315X					
UKX16D1;H2316X	TX16D1	C(CM)-UKTX16D1;H2316X	4	260	155	11	14
UKX16D1;HA2316	TX16D1	C(CM)-UKTX16AD1;HA2316	5/32	10 1/4	6 3/32	24	31
UKX16D1;HE2316X	TX16D1	C(CM)-UKTX16ED1;HE2316X					
UKX17D1;H2317X	TX17D1	C(CM)-UKTX17D1;H2317X	5	262	165	11	15
UKX17D1;HA2317X	TX17D1	C(CM)-UKTX17AD1;HA2317X	13/64	10 5/16	6 1/2	24	33
UKX17D1;HE2317X	TX17D1	C(CM)-UKTX17ED1;HE2317X					

Cartridge unit, cast housing
Adapter type

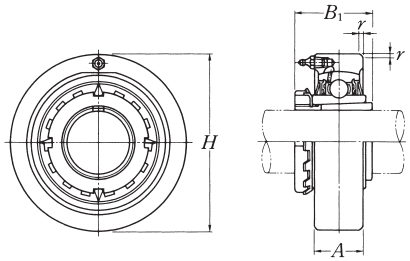

Shaft dia. mm / inch	Unit number (1)(2)(3)	Nominal dimensions mm / inch H	A	r	B_1	Bearing number	Housing number	Mass of unit kg / lb
20	UKC205D1;H2305X	80	22	2	35	UK205D1;H2305X	C205D1	0.7
3/4	UKC205D1;HE2305	3.1496	55/64	0.079	1.378	UK205D1;HE2305	C205D1	1.5
25	UKC206D1;H2306X	85	27	2	38	UK206D1;H2306X	C206D1	0.9
7/8	UKC206D1;HS2306	3.3465	1 1/16	0.079	1.496	UK206D1;HS2306	C206D1	2.0
1	UKC206D1;HE2306X					UK206D1;HE2306X	C206D1	
30	UKC207D1;H2307X	90	28	2	43	UK207D1;H2307X	C207D1	1.0
1 1/8	UKC207D1;HS2307	3.5433	1 7/64	0.079	1.693	UK207D1;HS2307	C207D1	2.2
35	UKC208D1;H2308X	100	30	2.5	46	UK208D1;H2308X	C208D1	1.3
1 1/4	UKC208D1;HE2308X	3.9370	1 3/16	0.098	1.811	UK208D1;HE2308X	C208D1	2.9
1 3/8	UKC208D1;HS2308X					UK208D1;HS2308X	C208D1	
40	UKC209D1;H2309X	110	31	2.5	50	UK209D1;H2309X	C209D1	1.6
1 7/16	UKC209D1;HA2309					UK209D1;HA2309	C209D1	
1 1/2	UKC209D1;HE2309X	4.3307	1 7/32	0.098	1.969	UK209D1;HE2309X	C209D1	3.5
1 5/8	UKC209D1;HS2309X					UK209D1;HS2309X	C209D1	
45	UKC210D1;H2310X	120	33	2.5	55	UK210D1;H2310X	C210D1	2.1
1 5/8	UKC210D1;HS2310					UK210D1;HS2310	C210D1	
1 11/16	UKC210D1;HA2310	4.7244	1 19/64	0.098	2.165	UK210D1;HA2310	C210D1	4.6
1 3/4	UKC210D1;HE2310X					UK210D1;HE2310X	C210D1	
50	UKC211D1;H2311X	125	35	2.5	59	UK211D1;H2311X	C211D1	2.3
1 7/8	UKC211D1;HS2311					UK211D1;HS2311	C211D1	
1 15/16	UKC211D1;HA2311	4.9213	1 3/8	0.098	2.323	UK211D1;HA2311	C211D1	5.1
2	UKC211D1;HE2311XY					UK211D1;HE2311XY	C211D1	
55	UKC212D1;H2312X	130	38	2.5	62	UK212D1;H2312X	C212D1	2.6
2 1/8	UKC212D1;HS2312	5.1181	1 1/2	0.098	2.441	UK212D1;HS2312	C212D1	5.7
60	UKC213D1;H2313X	140	40	3	65	UK213D1;H2313X	C213D1	3.2
2 3/16	UKC213D1;HA2313					UK213D1;HA2313	C213D1	
2 1/4	UKC213D1;HE2313X	5.5118	1 37/64	0.118	2.559	UK213D1;HE2313X	C213D1	7.1
2 3/8	UKC213D1;HS2313X					UK213D1;HS2313X	C213D1	

Notes (1) These numbers indicate relubricatable type. If maintenance free type is needed, please order without suffix "D1".
(2) Adapter number with suffix "X" means a narrow slot type adapter sleeve.
In this case the lock washer with the straight inner prong should be used.
(3) For HE2311XY, screw thread pitch different from the standard is applied, because of the thin thread section of sleeve.
To distinguish it, a suffix "Y" is added.

Remarks Please refer to page **A21** for size of grease fitting.

Cartridge unit, cast housing
Adapter type

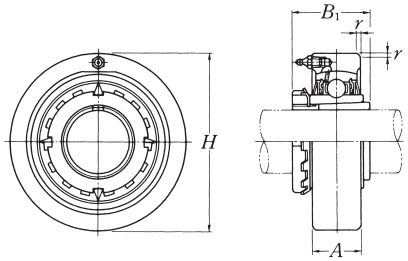

Shaft dia. mm / inch	Unit number (1)(2)(3)	Nominal dimensions mm / inch H	A	r	B_1	Bearing number	Housing number	Mass of unit kg / lb
20	UKC305D1;H2305X	90	26	2.5	35	UK305D1;H2305X	C305D1	1.0
3/4	UKC305D1;HE2305	3.5433	1 1/32	0.098	1.378	UK305D1;HE2305	C305D1	2.2
25	UKC306D1;H2306X	100	28	2.5	38	UK306D1;H2306X	C306D1	1.3
7/8	UKC306D1;HS2306	3.9370	1 7/64	0.098	1.496	UK306D1;HS2306	C306D1	2.9
1	UKC306D1;HE2306X					UK306D1;HE2306X	C306D1	
30	UKC307D1;H2307X	110	32	3	43	UK307D1;H2307X	C307D1	1.8
1 1/8	UKC307D1;HS2307	4.3307	1 17/64	0.118	1.693	UK307D1;HS2307	C307D1	4.0
35	UKC308D1;H2308X	120	34	3	46	UK308D1;H2308X	C308D1	2.2
1 1/4	UKC308D1;HE2308X	4.7244	1 11/32	0.118	1.811	UK308D1;HE2308X	C308D1	4.9
1 3/8	UKC308D1;HS2308X					UK308D1;HS2308X	C308D1	
40	UKC309D1;H2309X	130	38	3.5	50	UK309D1;H2309X	C309D1	2.7
1 7/16	UKC309D1;HA2309					UK309D1;HA2309	C309D1	
1 1/2	UKC309D1;HE2309X	5.1181	1 1/2	0.138	1.969	UK309D1;HE2309X	C309D1	6.0
1 5/8	UKC309D1;HS2309X					UK309D1;HS2309X	C309D1	
45	UKC310D1;H2310X	140	40	3.5	55	UK310D1;H2310X	C310D1	3.4
1 5/8	UKC310D1;HS2310					UK310D1;HS2310	C310D1	
1 11/16	UKC310D1;HA2310	5.5118	1 37/64	0.138	2.165	UK310D1;HA2310	C310D1	7.5
1 3/4	UKC310D1;HE2310X					UK310D1;HE2310X	C310D1	
50	UKC311D1;H2311X	150	44	3.5	59	UK311D1;H2311X	C311D1	4.0
1 7/8	UKC311D1;HS2311					UK311D1;HS2311	C311D1	
1 15/16	UKC311D1;HA2311	5.9055	1 47/64	0.138	2.323	UK311D1;HA2311	C311D1	8.8
2	UKC311D1;HE2311XY					UK311D1;HE2311XY	C311D1	
55	UKC312D1;H2312X	160	46	3.5	62	UK312D1;H2312X	C312D1	4.8
2 1/8	UKC312D1;HS2312	6.2992	1 13/16	0.138	2.441	UK312D1;HS2312	C312D1	11
60	UKC313D1;H2313X	170	50	3.5	65	UK313D1;H2313X	C313D1	5.6
2 3/16	UKC313D1;HA2313					UK313D1;HA2313	C313D1	
2 1/4	UKC313D1;HE2313X	6.6929	1 31/32	0.138	2.559	UK313D1;HE2313X	C313D1	12
2 3/8	UKC313D1;HS2313X					UK313D1;HS2313X	C313D1	

Notes (1) These numbers indicate relubricatable type. If maintenance free type is needed, please order without suffix "D1".
(2) Adapter number with suffix "X" means a narrow slot type adapter sleeve.
In this case the lock washer with the straight inner prong should be used.
(3) For HE2311XY, screw thread pitch different from the standard is applied, because of the thin thread section of sleeve.
To distinguish it, a suffix "Y" is added.

Remarks Please refer to page **A21** for size of grease fitting.

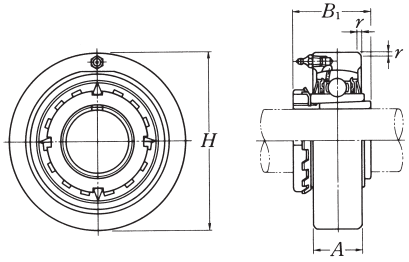

Shaft dia. mm / inch	Unit number (1)(2)	Nominal dimensions mm / inch H	A	r	B_1	Bearing number	Housing number	Mass of unit kg / lb
65	UKC315D1;H2315X	190	55	4	73	UK315D1;H2315X	C315D1	7.9
2 7/16	UKC315D1;HA2315	7.4803	2 11/64	0.157	2.874	UK315D1;HA2315	C315D1	17
2 1/2	UKC315D1;HE2315X					UK315D1;HE2315X	C315D1	
70	UKC316D1;H2316X	200	60	4	78	UK316D1;H2316X	C316D1	9.4
2 11/16	UKC316D1;HA2316	7.8740	2 23/64	0.157	3.071	UK316D1;HA2316	C316D1	21
2 3/4	UKC316D1;HE2316X					UK316D1;HE2316X	C316D1	
75	UKC317D1;H2317X	215	64	4	82	UK317D1;H2317X	C317D1	11
2 15/16	UKC317D1;HA2317X	8.4646	2 33/64	0.157	3.228	UK317D1;HA2317X	C317D1	24
3	UKC317D1;HE2317X					UK317D1;HE2317X	C317D1	
80	UKC318D1;H2318X	225	66	4	86	UK318D1;H2318X	C318D1	13
3 3/16	UKC318D1;HA2318X	8.8583	2 19/32	0.157	3.386	UK318D1;HA2318X	C318D1	29
85	UKC319D1;H2319X	240	72	4	90	UK319D1;H2319X	C319D1	16
3 1/4	UKC319D1;HE2319X	9.4488	2 53/64	0.157	3.543	UK319D1;HE2319X	C319D1	35
90	UKC320D1;H2320X	260	75	4	97	UK320D1;H2320X	C320D1	20
3 7/16	UKC320D1;HA2320	10.2362	2 61/64	0.157	3.819	UK320D1;HA2320	C320D1	44
3 1/2	UKC320D1;HE2320X					UK320D1;HE2320X	C320D1	
100	UKC322D1;H2322X	300	80	5	105	UK322D1;H2322X	C322D1	29
110	UKC324D1;H2324	320	90	5	112	UK324D1;H2324	C324D1	35
115	UKC326D1;H2326	340	100	5	121	UK326D1;H2326	C326D1	43
125	UKC328D1;H2328	360	100	5	131	UK328D1;H2328	C328D1	50

Notes (1) These numbers indicate relubricatable type. If maintenance free type is needed, please order without suffix "D1".
(2) Adapter number with suffix "X" means a narrow slot type adapter sleeve.
In this case the lock washer with the straight inner prong should be used.

Remarks Please refer to page **A21** for size of grease fitting.

Cartridge unit, cast housing
Adapter type

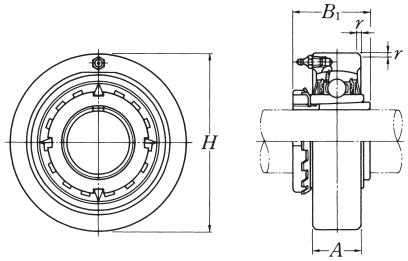

Shaft dia. mm / inch	Unit number (1)(2)(3)	Nominal dimensions mm / inch H	A	r	B_1	Bearing number	Housing number	Mass of unit kg / lb
20	**UKCX05D1;H2305X**	90	27	2	35	UKX05D1;H2305X	CX05D1	1.1
3/4	**UKCX05D1;HE2305**	3.5433	1 1/16	0.079	1.378	UKX05D1;HE2305	CX05D1	2.4
25	**UKCX06D1;H2306X**	100	30	2.5	38	UKX06D1;H2306X	CX06D1	1.4
7/8	**UKCX06D1;HS2306**	3.9370	1 3/16	0.098	1.496	UKX06D1;HS2306	CX06D1	3.1
1	**UKCX06D1;HE2306X**					UKX06D1;HE2306X	CX06D1	
30	**UKCX07D1;H2307X**	110	34	2.5	43	UKX07D1;H2307X	CX07D1	1.8
1 1/8	**UKCX07D1;HS2307**	4.3307	1 11/32	0.098	1.693	UKX07D1;HS2307	CX07D1	4.0
35	**UKCX08D1;H2308X**	120	38	2.5	46	UKX08D1;H2308X	CX08D1	2.5
1 1/4	**UKCX08D1;HE2308X**	4.7244	1 1/2	0.098	1.811	UKX08D1;HE2308X	CX08D1	5.5
1 3/8	**UKCX08D1;HS2308X**					UKX08D1;HS2308X	CX08D1	
40	**UKCX09D1;H2309X**	120	38	2.5	50	UKX09D1;H2309X	CX09D1	2.2
1 7/16	**UKCX09D1;HA2309**					UKX09D1;HA2309	CX09D1	
1 1/2	**UKCX09D1;HE2309X**	4.7244	1 1/2	0.098	1.969	UKX09D1;HE2309X	CX09D1	4.9
1 5/8	**UKCX09D1;HS2309X**					UKX09D1;HS2309X	CX09D1	
45	**UKCX10D1;H2310X**	130	40	2.5	55	UKX10D1;H2310X	CX10D1	2.7
1 5/8	**UKCX10D1;HS2310**					UKX10D1;HS2310	CX10D1	
1 11/16	**UKCX10D1;HA2310**	5.1181	1 37/64	0.098	2.165	UKX10D1;HA2310	CX10D1	6.0
1 3/4	**UKCX10D1;HE2310X**					UKX10D1;HE2310X	CX10D1	
50	**UKCX11D1;H2311X**	150	42	3	59	UKX11D1;H2311X	CX11D1	4.0
1 7/8	**UKCX11D1;HS2311**					UKX11D1;HS2311	CX11D1	
1 15/16	**UKCX11D1;HA2311**	5.9055	1 21/32	0.118	2.323	UKX11D1;HA2311	CX11D1	8.8
2	**UKCX11D1;HE2311XY**					UKX11D1;HE2311XY	CX11D1	
55	**UKCX12D1;H2312X**	160	44	3	62	UKX12D1;H2312X	CX12D1	3.9
2 1/8	**UKCX12D1;HS2312**	6.2992	1 47/64	0.118	2.441	UKX12D1;HS2312	CX12D1	8.6

Notes (1) These numbers indicate relubricatable type. If maintenance free type is needed, please order without suffix "D1".
(2) Adapter number with suffix "X" means a narrow slot type adapter sleeve.
In this case the lock washer with the straight inner prong should be used.
(3) For HE2311XY, screw thread pitch different from the standard is applied, because of the thin thread section of sleeve.
To distinguish it, a suffix "Y" is added.

Remarks Please refer to page **A21** for size of grease fitting.

Ball bearings
Set screw type

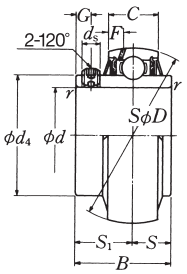

Shaft dia. mm inch	Bearing (1) number	Nominal dimensions mm inch d	D	B	C	r min.	S	S_1	G	d_s	d_4	F	Basic load ratings N lbf dynamic C_r	static C_{0r}	Mass kg lb
12	UC201D1	12	47	31	17	0.6	12.7	18.3	4.5	M5×0.8	29.6	4.7	12 800	6 650	0.21
1/2	UC201-008D1	0.5000	1.8504	1.2205	0.6693	0.024	0.500	0.720	0.177	No.10-32UNF	1.1654	0.185	2 890	1 500	0.46
15	UC202D1	15	47	31	17	0.6	12.7	18.3	4.5	M5×0.8	29.6	4.7	12 800	6 650	0.20
9/16	UC202-009D1	0.5625	1.8504	1.2205	0.6693	0.024	0.500	0.720	0.177	No.10-32UNF	1.1654	0.185	2 890	1 500	0.44
5/8	UC202-010D1	0.6250													0.42
17	UC203D1	17	47	31	17	0.6	12.7	18.3	4.5	M5×0.8	29.6	4.7	12 800	6 650	0.18
11/16	UC203-011D1	0.6875	1.8504	1.2205	0.6693	0.024	0.500	0.720	0.177	No.10-32UNF	1.1654	0.185	2 890	1 500	0.39
20	UC204D1	20	47	31	17	1	12.7	18.3	4.5	M5×0.8	29.6	4.7	12 800	6 650	0.17
3/4	UC204-012D1	0.7500	1.8504	1.2205	0.6693	0.039	0.500	0.720	0.177	No.10-32UNF	1.1654	0.185	2 890	1 500	0.39
25	UC205D1	25	52	34.1	17	1	14.3	19.8	5	M5×0.8	33.9	4.5	14 000	7 850	0.20
13/16	UC205-013D1	0.8125	2.0472	1.3425	0.6693	0.039	0.563	0.780	0.197	No.10-32UNF	1.3346	0.177	3 150	1 770	0.53
7/8	UC205-014D1	0.8750													0.51
15/16	UC205-015D1	0.9375													0.46
1	UC205-100D1	1.0000													0.44
30	UC206D1	30	62	38.1	19	1	15.9	22.2	5	M6×0.75	40.8	4.6	19 500	11 300	0.32
1 1/16	UC206-101D1	1.0625	2.4409	1.5000	0.7480	0.039	0.626	0.874	0.197	1/4-28UNF	1.6063	0.181	4 400	2 540	0.82
1 1/8	UC206-102D1	1.1250													0.77
1 3/16	UC206-103D1	1.1875													0.73
1 1/4	UC206-104D1	1.2500													0.66
35	UC207D1	35	72	42.9	20	1.5	17.5	25.4	6	M6×0.75	46.8	4.6	25 700	15 300	0.46
1 1/4	UC207-104D1	1.2500	2.8346	1.6890	0.7874	0.059	0.689	1.000	0.236	1/4-28UNF	1.8425	0.181	5 750	3 450	1.21
1 5/16	UC207-105D1	1.3125													1.15
1 3/8	UC207-106D1	1.3750													1.08
1 7/16	UC207-107D1	1.4375													1.01
40	UC208D1	40	80	49.2	21	1.5	19	30.2	8	M8×1	53	4.5	29 100	17 800	0.64
1 1/2	UC208-108D1	1.5000	3.1496	1.9370	0.8268	0.059	0.748	1.189	0.315	5/16-24UNF	2.0866	0.177	6 550	4 000	1.52
1 9/16	UC208-109D1	1.5625													1.46
45	UC209D1	45	85	49.2	22	1.5	19	30.2	8	M8×1	57.5	4.9	32 500	20 400	0.68
1 5/8	UC209-110D1	1.6250	3.3465	1.9370	0.8661	0.059	0.748	1.189	0.315	5/16-24UNF	2.2638	0.193	7 350	4 600	1.76
1 11/16	UC209-111D1	1.6875													1.68
1 3/4	UC209-112D1	1.7500													1.57

Note (1) These numbers indicate relubricatable type. If maintenance free type is needed, please order without suffix "D1".

Ball bearings
Set screw type

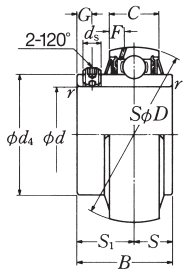

Shaft dia. mm inch	Bearing (1) number	Nominal dimensions mm inch d	D	B	C	r min.	S	S_1	G	d_s	d_4	F	Basic load ratings N lbf dynamic C_r	static C_{0r}	Mass kg lb
50	UC210D1	50	90	51.6	24	1.5	19	32.6	9	M8×1	62.4	5.9	35 000	23 200	0.78
1 13/16	UC210-113D1	1.8125													2.03
1 7/8	UC210-114D1	1.8750	3.5433	2.0315	0.9449	0.059	0.748	1.283	0.354	5/16-24UNF	2.4567	0.232	7 900	5 200	1.92
1 15/16	UC210-115D1	1.9375													1.81
2	UC210-200D1	2.0000													1.69
55	UC211D1	55	100	55.6	25	2	22.2	33.4	9	M8×1	69	6.0	43 500	29 200	1.04
2	UC211-200D1	2.0000													2.71
2 1/16	UC211-201D1	2.0625	3.9370	2.1890	0.9843	0.079	0.874	1.315	0.354	5/16-24UNF	2.7165	0.236	9 750	6 550	2.60
2 1/8	UC211-202D1	2.1250													2.46
2 3/16	UC211-203D1	2.1875													2.34
60	UC212D1	60	110	65.1	27	2	25.4	39.7	10	M10×1.25	77	6.2	52 500	36 000	1.46
2 1/4	UC212-204D1	2.2500													3.66
2 5/16	UC212-205D1	2.3125	4.3307	2.5630	1.0630	0.079	1.000	1.563	0.394	3/8-24UNF	3.0315	0.244	11 800	8 150	3.50
2 3/8	UC212-206D1	2.3750													3.33
2 7/16	UC212-207D1	2.4375													3.17
65	UC213D1	65	120	65.1	32	2	25.4	39.7	10	M10×1.25	82.5	8.7	57 500	40 000	1.86
2 1/2	UC213-208D1	2.5000	4.7244	2.5630	1.2598	0.079	1.000	1.563	0.394	3/8-24UNF	3.2480	0.343	12 900	9 000	4.26
2 9/16	UC213-209D1	2.5625													4.09
70	UC214D1	70	125	74.6	33	2	30.2	44.4	12	M10×1.25	87	8.8	62 000	44 000	2.10
2 5/8	UC214-210D1	2.6250													5.09
2 11/16	UC214-211D1	2.6875	4.9213	2.9370	1.2992	0.079	1.189	1.748	0.472	3/8-24UNF	3.4252	0.346	14 000	9 900	4.87
2 3/4	UC214-212D1	2.7500													4.65
75	UC215D1	75	130	77.8	34	2	33.3	44.5	12	M10×1.25	93	9.0	66 000	49 500	2.34
2 13/16	UC215-213D1	2.8125													5.73
2 7/8	UC215-214D1	2.8750	5.1181	3.0630	1.3386	0.079	1.311	1.752	0.472	3/8-24UNF	3.6614	0.354	14 900	11 100	5.49
2 15/16	UC215-215D1	2.9375													5.25
3	UC215-300D1	3.0000													4.98
80	UC216D1	80	140	82.6	35	2.5	33.3	49.3	12	M10×1.25	98.1	9.5	72 500	53 000	2.78
3 1/16	UC216-301D1	3.0625													6.57
3 1/8	UC216-302D1	3.1250	5.5118	3.2520	1.3780	0.098	1.311	1.941	0.472	3/8-24UNF	3.8622	0.374	16 300	11 900	6.28
3 3/16	UC216-303D1	3.1875													6.00

Note (1) These numbers indicate relubricatable type. If maintenance free type is needed, please order without suffix "D1".

Ball bearings
Set screw type

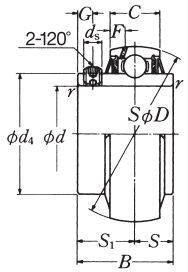

Shaft dia. mm inch	Bearing (1) number	Nominal dimensions mm inch d	D	B	C	r min.	S	S_1	G	d_s	d_4	F	Basic load ratings N lbf dynamic C_r	static C_{0r}	Mass kg lb
85	UC217D1	85	150	85.7	36	2.5	34.1	51.6	12	M12×1.5	106.4	10.1	83 500	64 000	3.54
3 1/4	UC217-304D1	3.2500													7.92
3 5/16	UC217-305D1	3.3125	5.9055	3.3740	1.4173	0.098	1.343	2.031	0.472	1/2-20UNF	4.1890	0.398	18 700	14 300	7.60
3 7/16	UC217-307D1	3.4375													6.97
90	UC218D1	90	160	96	37	2.5	39.7	56.3	12	M12×1.5	111.6	9.8	96 000	71 500	4.40
3 1/2	UC218-308D1	3.5000	6.2992	3.7795	1.4567	0.098	1.563	2.217	0.472	1/2-20UNF	4.3937	0.386	21 600	16 100	9.88

Note (1) These numbers indicate relubricatable type. If maintenance free type is needed, please order without suffix "D1".

Ball bearings
Set screw type

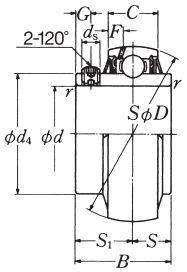

Shaft dia. mm inch	Bearing (1) number	Nominal dimensions mm inch d	D	B	C	r min.	S	S_1	G	d_s	d_4	F	Basic load ratings N lbf dynamic C_r	static C_{0r}	Mass kg lb
25	UC305D1	25	62	38	20	1.5	15	23	6	M6×0.75	36.8	5.0	21 200	10 900	0.35
13/16	UC305-013D1	0.8125													0.88
7/8	UC305-014D1	0.8750	2.4409	1.4961	0.7874	0.059	0.591	0.906	0.236	1/4-28UNF	1.4488	0.197	4 750	2 460	0.84
15/16	UC305-015D1	0.9375													0.79
1	UC305-100D1	1.0000													0.77
30	UC306D1	30	72	43	23	1.5	17	26	6	M6×0.75	44.9	5.9	26 700	15 000	0.56
1 1/16	UC306-101D1	1.0625													1.34
1 1/8	UC306-102D1	1.1250	2.8346	1.6929	0.9055	0.059	0.669	1.024	0.236	1/4-28UNF	1.7677	0.232	6 000	3 400	1.28
1 3/16	UC306-103D1	1.1875													1.23
35	UC307D1	35	80	48	25	2	19	29	8	M8×1	49.4	6.8	33 500	19 100	0.70
1 1/4	UC307-104D1	1.2500													1.70
1 5/16	UC307-105D1	1.3125	3.1496	1.8898	0.9843	0.079	0.748	1.142	0.315	5/16-24UNF	1.9449	0.268	7 500	4 300	1.63
1 3/8	UC307-106D1	1.3750													1.57
1 7/16	UC307-107D1	1.4375													1.50
40	UC308D1	40	90	52	27	2	19	33	10	M10×1.25	56	7.4	40 500	24 000	0.96
1 1/2	UC308-108D1	1.5000	3.5433	2.0472	1.0630	0.079	0.748	1.299	0.394	3/8-24UNF	2.2047	0.291	9 150	5 400	2.23
1 9/16	UC308-109D1	1.5625													2.14
45	UC309D1	45	100	57	29	2	22	35	10	M10×1.25	63.5	7.4	53 000	32 000	1.28
1 5/8	UC309-110D1	1.6250													3.06
1 11/16	UC309-111D1	1.6875	3.9370	2.2441	1.1417	0.079	0.866	1.378	0.394	3/8-24UNF	2.5000	0.291	11 900	7 200	2.98
1 3/4	UC309-112D1	1.7500													2.87
50	UC310D1	50	110	61	32	2.5	22	39	12	M12×1.5	70.6	8.1	62 000	38 500	1.68
1 13/16	UC310-113D1	1.8125													3.95
1 7/8	UC310-114D1	1.8750	4.3307	2.4016	1.2598	0.098	0.866	1.535	0.472	1/2-20UNF	2.7795	0.319	13 900	8 600	3.84
1 15/16	UC310-115D1	1.9375													3.70

Note (1) These numbers indicate relubricatable type. If maintenance free type is needed, please order without suffix "D1".

Ball bearings
Set screw type

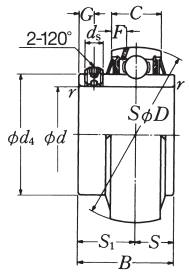

Shaft dia. mm / inch	Bearing (1) number	Nominal dimensions mm / inch d	D	B	C	r min.	S	S_1	G	d_s	d_4	F	Basic load ratings N / lbf dynamic C_r	static C_{0r}	Mass kg / lb
55	UC311D1	55	120	66	34	2.5	25	41	12	M12×1.5	76.6	8.5	71 500	45 000	2.08
2	UC311-200D1	2.0000													4.96
2 1/16	UC311-201D1	2.0625	4.7244	2.5984	1.3386	0.098	0.984	1.614	0.472	1/2-20UNF	3.0157	0.335	16 100	10 100	4.81
2 1/8	UC311-202D1	2.1250													4.67
2 3/16	UC311-203D1	2.1875													4.50
60	UC312D1	60	130	71	36	2.5	26	45	12	M12×1.5	82.7	9.0	82 000	52 000	2.60
2 1/4	UC312-204D1	2.2500													6.06
2 5/16	UC312-205D1	2.3125	5.1181	2.7953	1.4173	0.098	1.024	1.772	0.472	1/2-20UNF	3.2559	0.354	18 400	11 700	5.89
2 3/8	UC312-206D1	2.3750													5.68
2 7/16	UC312-207D1	2.4375													5.51
65	UC313D1	65	140	75	39	2.5	30	45	12	M12×1.5	88.2	10.1	92 500	60 000	3.25
2 1/2	UC313-208D1	2.5000	5.5118	2.9528	1.5354	0.098	1.181	1.772	0.472	1/2-20UNF	3.4724	0.398	20 800	13 400	7.36
2 9/16	UC313-209D1	2.5625													7.14
70	UC314D1	70	150	78	41	2.5	33	45	12	M12×1.5	94.8	10.5	104 000	68 000	3.86
2 5/8	UC314-210D1	2.6250													9.06
2 11/16	UC314-211D1	2.6875	5.9055	3.0709	1.6142	0.098	1.299	1.772	0.472	1/2-20UNF	3.7323	0.413	23 400	15 300	8.82
2 3/4	UC314-212D1	2.7500													8.60
75	UC315D1	75	160	82	43	2.5	32	50	14	M14×1.5	101.3	11.0	113 000	77 000	4.70
2 13/16	UC315-213D1	2.8125													11.0
2 7/8	UC315-214D1	2.8750	6.2992	3.2283	1.6929	0.098	1.260	1.969	0.551	9/16-18UNF	3.9882	0.433	25 500	17 400	10.7
2 15/16	UC315-215D1	2.9375													10.5
3	UC315-300D1	3.0000													10.2
80	UC316D1	80	170	86	45	2.5	34	52	14	M14×1.5	107.9	11.4	123 000	86 500	5.60
3 1/16	UC316-301D1	3.0625													12.6
3 1/8	UC316-302D1	3.1250	6.6929	3.3858	1.7717	0.098	1.339	2.047	0.551	9/16-18UNF	4.2480	0.449	27 600	19 500	12.3
3 3/16	UC316-303D1	3.1875													12.1

Note (1) These numbers indicate relubricatable type. If maintenance free type is needed, please order without suffix "D1".

Ball bearings
Set screw type

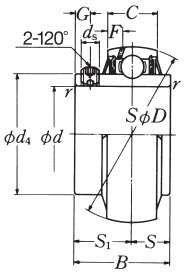

Shaft dia. mm inch	Bearing (1) number	Nominal dimensions mm inch d	D	B	C	r min.	S	S_1	G	d_s	d_4	F	Basic load ratings N lbf dynamic C_r	static C_{0r}	Mass kg lb
85	UC317D1	85	180	96	47	3	40	56	16	M16×1.5	114.4	12.0	133 000	97 000	6.70
3 1/4	UC317-304D1	3.2500													15.2
3 5/16	UC317-305D1	3.3125	7.0866	3.7795	1.8504	0.118	1.575	2.205	0.630	5/8-18UNF	4.5039	0.472	29 800	21 800	14.9
3 7/16	UC317-307D1	3.4375													14.2
90	UC318D1	90	190	96	49	3	40	56	16	M16×1.5	120.9	12.3	143 000	107 000	7.60
3 7/16	UC318-307D1	3.4375	7.4803	3.7795	1.9291	0.118	1.575	2.205	0.630	5/8-18UNF	4.7598	0.484	32 000	24 100	17.3
3 1/2	UC318-308D1	3.5000													16.9
95	UC319D1	95	200	103	51	3	41	62	16	M16×1.5	127.5	12.8	153 000	119 000	8.70
3 5/8	UC319-310D1	3.6250													19.9
3 11/16	UC319-311D1	3.6875	7.8740	4.0551	2.0079	0.118	1.614	2.441	0.630	5/8-18UNF	5.0197	0.504	34 500	26 600	19.5
3 3/4	UC319-312D1	3.7500													19.1
100	UC320D1	100	215	108	55	3	42	66	18	M18×1.5	135.6	13.5	173 000	141 000	10.8
3 13/16	UC320-313D1	3.8125													24.7
3 7/8	UC320-314D1	3.8750	8.4646	4.2520	2.1654	0.118	1.654	2.598	0.709	5/8-18UNF	5.3386	0.531	39 000	31 500	24.2
3 15/16	UC320-315D1	3.9375													23.8
4	UC320-400D1	4.0000													23.4
105	UC321D1	105	225	112	57	3	44	68	18	M18×1.5	142.1	13.9	184 000	153 000	12.2
110	UC322D1	110	240	117	59	3	46	71	18	M18×1.5	151.7	13.9	205 000	179 000	14.3
120	UC324D1	120	260	126	63	3	51	75	18	M18×1.5	165.2	16.0	207 000	185 000	18.5
130	UC326D1	130	280	135	67	4	54	81	20	M20×1.5	178.3	16.9	229 000	214 000	23.0
140	UC328D1	140	300	145	71	4	59	86	20	M20×1.5	190.4	17.7	253 000	246 000	28.5

Note (1) These numbers indicate relubricatable type. If maintenance free type is needed, please order without suffix "D1".

Ball bearings
Set screw type

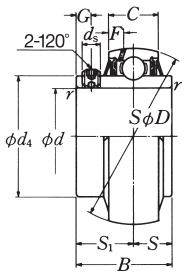

Shaft dia. mm inch	Bearing (1) number	Nominal dimensions mm inch d	D	B	C	r min.	S	S_1	G	d_s	d_4	F	Basic load ratings N lbf dynamic C_r	static C_{0r}	Mass kg lb
25	UCX05D1	25	62	38.1	19	1	15.9	22.2	5	M6×0.75	40.8	4.6	19 500	11 300	0.39
13/16	UCX05-013D1	0.8125													0.97
7/8	UCX05-014D1	0.8750	2.4409	1.5000	0.7480	0.039	0.626	0.874	0.197	1/4-28UNF	1.6063	0.181	4 400	2 540	0.93
15/16	UCX05-015D1	0.9375													0.88
1	UCX05-100D1	1.0000													0.84
30	UCX06D1	30	72	42.9	20	1	17.5	25.4	6	M8×1	46.8	4.6	25 700	15 300	0.68
1 1/16	UCX06-101D1	1.0625													1.61
1 1/8	UCX06-102D1	1.1250	2.8346	1.6890	0.7874	0.039	0.689	1.000	0.236	5/16-24UNF	1.8425	0.181	5 750	3 450	1.54
1 3/16	UCX06-103D1	1.1875													1.50
35	UCX07D1	35	80	49.2	21	1.5	19	30.2	8	M8×1	53	4.5	29 100	17 800	0.74
1 5/16	UCX07-105D1	1.3125													1.87
1 3/8	UCX07-106D1	1.3750	3.1496	1.9370	0.8268	0.059	0.748	1.189	0.315	5/16-24UNF	2.0866	0.177	6 550	4 000	1.81
1 7/16	UCX07-107D1	1.4375													1.74
40	UCX08D1	40	85	49.2	22	1.5	19	30.2	8	M8×1	57.5	4.9	32 500	20 400	0.80
1 1/2	UCX08-108D1	1.5000	3.3465	1.9370	0.8661	0.059	0.748	1.189	0.315	5/16-24UNF	2.2638	0.193	7 350	4 600	2.16
1 9/16	UCX08-109D1	1.5625													2.07
45	UCX09D1	45	90	51.6	24	1.5	19	32.6	9	M10×1.25	62.4	5.9	35 000	23 200	0.94
1 5/8	UCX09-110D1	1.6250													2.43
1 11/16	UCX09-111D1	1.6875	3.5433	2.0315	0.9449	0.059	0.748	1.283	0.354	3/8-24UNF	2.4567	0.232	7 900	5 200	2.34
1 3/4	UCX09-112D1	1.7500													2.25
50	UCX10D1	50	100	55.6	25	1.5	22.2	33.4	9	M10×1.25	69	6.0	43 500	29 200	1.22
1 7/8	UCX10-114D1	1.8750	3.9370	2.1890	0.9843	0.059	0.874	1.315	0.354	3/8-24UNF	2.7165	0.236	9 750	6 550	3.15
1 15/16	UCX10-115D1	1.9375													3.04
55	UCX11D1	55	110	65.1	27	2	25.4	39.7	10	M10×1.25	77	6.2	52 500	36 000	1.72
2 1/16	UCX11-201D1	2.0625													4.43
2 1/8	UCX11-202D1	2.1250	4.3307	2.5630	1.0630	0.079	1.000	1.563	0.394	3/8-24UNF	3.0315	0.244	11 800	8 150	4.30
2 3/16	UCX11-203D1	2.1875													4.12
60	UCX12D1	60	120	65.1	32	2	25.4	39.7	10	M10×1.25	82.5	8.7	57 500	40 000	2.10
2 3/8	UCX12-206D1	2.3750	4.7244	2.5630	1.2598	0.079	1.000	1.563	0.394	3/8-24UNF	3.2480	0.343	12 900	9 000	4.96
2 7/16	UCX12-207D1	2.4375													4.81

Note (1) These numbers indicate relubricatable type. If maintenance free type is needed, please order without suffix "D1".

Ball bearings
Set screw type

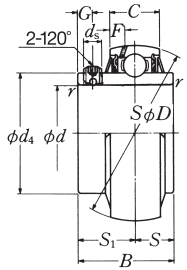

Shaft dia. mm inch	Bearing (1) number	Nominal dimensions mm inch d	D	B	C	r min.	S	S_1	G	d_s	d_4	F	Basic load ratings N lbf dynamic C_r	static C_{0r}	Mass kg lb
65	UCX13D1	65	125	74.6	33	2	30.2	44.4	12	M12×1.5	87	8.8	62 000	44 000	2.45
2 1/2	UCX13-208D1	2.5000	4.9213	2.9370	1.2992	0.079	1.189	1.748	0.472	1/2-20UNF	3.4252	0.346	14 000	9 900	5.60
2 9/16	UCX13-209D1	2.5625													5.38
70	UCX14D1	70	130	77.8	34	2	33.3	44.5	12	M12×1.5	93	9.0	66 000	49 500	2.47
2 5/8	UCX14-210D1	2.6250													5.93
2 11/16	UCX14-211D1	2.6875	5.1181	3.0630	1.3386	0.079	1.311	1.752	0.472	1/2-20UNF	3.6614	0.354	14 900	11 100	5.69
2 3/4	UCX14-212D1	2.7500													5.47
75	UCX15D1	75	140	82.6	35	2	33.3	49.3	12	M12×1.5	98.1	9.5	72 500	53 000	3.11
2 13/16	UCX15-213D1	2.8125													7.43
2 7/8	UCX15-214D1	2.8750	5.5118	3.2520	1.3780	0.079	1.311	1.941	0.472	1/2-20UNF	3.8622	0.374	16 300	11 900	7.19
2 15/16	UCX15-215D1	2.9375													6.92
3	UCX15-300D1	3.0000													6.66
80	UCX16D1	80	150	85.7	36	2.5	34.1	51.6	12	M12×1.5	106.4	10.1	83 500	64 000	3.96
3 1/16	UCX16-301D1	3.0625													8.75
3 1/8	UCX16-302D1	3.1250	5.9055	3.3740	1.4173	0.098	1.343	2.031	0.472	1/2-20UNF	4.1890	0.398	18 700	14 300	8.47
3 3/16	UCX16-303D1	3.1875													8.18
85	UCX17D1	85	160	96	37	2.5	39.7	56.3	12	M12×1.5	111.6	9.8	96 000	71 500	4.72
3 5/16	UCX17-305D1	3.3125	6.2992	3.7795	1.4567	0.098	1.563	2.217	0.472	1/2-20UNF	4.3937	0.386	21 600	16 100	10.8
3 7/16	UCX17-307D1	3.4375													10.1
90	UCX18D1	90	170	104	39	2.5	42.9	61.1	14	M14×1.5	118.2	10.5	109 000	82 000	5.50
3 7/16	UCX18-307D1	3.4375	6.6929	4.0945	1.5354	0.098	1.689	2.406	0.551	9/16-18UNF	4.6535	0.413	24 500	18 400	13.3
3 1/2	UCX18-308D1	3.5000													12.4
100	UCX20D1	100	190	117.5	44	2.5	49.2	68.3	16	M16×1.5	131.3	11.3	133 000	105 000	8.06
3 13/16	UCX20-313D1	3.8125													18.8
3 7/8	UCX20-314D1	3.8750	7.4803	4.6260	1.7323	0.098	1.937	2.689	0.630	5/8-18UNF	5.1693	0.445	29 900	23 500	18.4
3 15/16	UCX20-315D1	3.9375													19.7
4	UCX20-400D1	4.0000													19.2

Note (1) These numbers indicate relubricatable type. If maintenance free type is needed, please order without suffix "D1".

Ball bearings
Set screw type

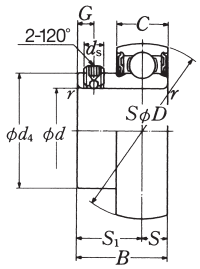

Shaft dia. mm / inch	Bearing (1) number	Nominal dimensions (mm / inch) d	D	B	C	r min.	S	S_1	G	d_s	d_4	Basic load ratings (N / lbf) dynamic C_r	static C_{0r}	Mass kg / lb
12	AS201	12	40	22	12	0.6	6	16	4.2	M5×0.8	24.3	9 600	4 600	0.10
1/2	AS201-008	0.5000	1.5748	0.8661	0.4724	0.024	0.236	0.630	0.165	No.10-32UNF	0.957	2 160	1 030	0.22
15	AS202	15	40	22	12	0.6	6	16	4.2	M5×0.8	24.3	9 600	4 600	0.09
9/16	AS202-009	0.5625	1.5748	0.8661	0.4724	0.024	0.236	0.630	0.165	No.10-32UNF	0.957	2 160	1 030	0.21
5/8	AS202-010	0.6250												0.20
17	AS203	17	40	22	12	0.6	6	16	4.2	M5×0.8	24.3	9 600	4 600	0.08
11/16	AS203-011	0.6875	1.5748	0.8661	0.4724	0.024	0.236	0.630	0.165	No.10-32UNF	0.957	2 160	1 030	0.18
20	AS204	20	47	25	14	1	7	18	4.2	M5×0.8	29.6	12 800	6 650	0.13
3/4	AS204-012	0.7500	1.8504	0.9843	0.5512	0.039	0.276	0.709	0.165	No.10-32UNF	1.165	2 890	1 500	0.29
25	AS205	25	52	27	15	1	7.5	19.5	5	M5×0.8	33.9	14 000	7 850	0.16
13/16	AS205-013	0.8125	2.0472	1.0630	0.5906	0.039	0.295	0.768	0.197	No.10-32UNF	1.335	3 150	1 770	0.42
7/8	AS205-014	0.8750												0.40
15/16	AS205-015	0.9375												0.38
1	AS205-100	1.0000												0.35
30	AS206	30	62	29	16	1	8	21	5	M6×0.75	40.8	19 500	11 300	0.25
1 1/16	AS206-101	1.0625	2.4409	1.1417	0.6299	0.039	0.315	0.827	0.197	1/4-28UNF	1.606	4 400	2 540	0.61
1 1/8	AS206-102	1.1250												0.59
1 3/16	AS206-103	1.1875												0.57
1 1/4	AS206-104	1.2500												0.55
35	AS207	35	72	34	17	1.5	8.5	25.5	6	M6×0.75	46.8	25 700	15 300	0.38
1 1/4	AS207-104	1.2500	2.8346	1.3386	0.6693	0.059	0.335	1.004	0.236	1/4-28UNF	1.843	5 750	3 450	1.06
1 5/16	AS207-105	1.3125												0.93
1 3/8	AS207-106	1.3750												0.81
1 7/16	AS207-107	1.4375												0.69
40	AS208	40	80	38	18	1.5	9	29	8	M8×1	53	29 100	17 800	0.51
1 1/2	AS208-108	1.5000	3.1496	1.4961	0.7087	0.059	0.354	1.142	0.315	5/16-24UNF	2.087	6 550	4 000	1.15
1 9/16	AS208-109	1.5625												1.06

Note (1) If relubricatable type is needed, please order with suffix "D1".

Ball bearings
Set screw type

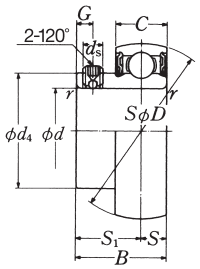

Shaft dia. mm inch	Bearing (1) number	Nominal dimensions mm inch d	D	B	C	r min.	S	S_1	G	d_s	d_4	Basic load ratings N lbf dynamic C_r	static C_{0r}	Mass kg lb
45	AS209	45	85	40	19	1.5	9.5	30.5	8	M8×1	57.5	32 500	20 400	0.55
1 5/8	AS209-110	1.6250												1.39
1 11/16	AS209-111	1.6875	3.3465	1.5748	0.7480	0.059	0.374	1.201	0.315	5/16-24UNF	2.2638	7 350	4 600	1.32
1 3/4	AS209-112	1.7500												1.23
50	AS210	50	90	42	20	1.5	10	32	9	M8×1	62.4	35 000	23 200	0.65
1 13/16	AS210-113	1.8125												1.65
1 7/8	AS210-114	1.8750	3.5433	1.6535	0.7874	0.059	0.394	1.260	0.354	5/16-24UNF	2.4567	7 900	5 200	1.57
1 15/16	AS210-115	1.9375												1.48
2	AS210-200	2.0000												1.39

Note (1) If relubricatable type is needed, please order with "D1".

Ball bearings
Set screw type

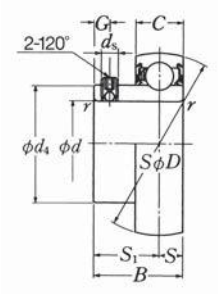

Shaft dia. mm / inch	Bearing (1) number	Nominal dimensions (mm / inch) d	D	B	C	r min.	S	S_1	G	d_s	d_4	Basic load ratings (N / lbf) dynamic C_r	static C_{or}	Mass (kg / lb)
12	AR201	12	40	22.5	13	0.6	6.5	16	5	M6×0.75	24.4	9 600	4 600	0.11
1/2	AR201-008	0.5000	1.5748	0.8858	0.5118	0.024	0.256	0.630	0.197	1/4-28UNF	0.9606	2 160	1 030	0.24
15	AR202	15	40	22.5	13	0.6	6.5	16	5	M6×0.75	24.4	9 600	4 600	0.10
9/16	AR202-009	0.5625	1.5748	0.8858	0.5118	0.024	0.256	0.630	0.197	1/4-28UNF	0.9606	2 160	1 030	0.23
5/8	AR202-010	0.6250												0.22
17	AR203	17	40	22.5	13	0.6	6.5	16	5	M6×0.75	24.4	9 600	4 600	0.09
11/16	AR203-011	0.6875	1.5748	0.8858	0.5118	0.024	0.256	0.630	0.197	1/4-28UNF	0.9606	2 160	1 030	0.20
20	AR204	20	47	25.5	15	1	7.5	18	5	M6×0.75	29.6	12 800	6 650	0.14
3/4	AR204-012	0.7500	1.8504	1.0039	0.5906	0.039	0.295	0.709	0.197	1/4-28UNF	1.1654	2 890	1 500	0.31
25	AR205	25	52	27	15	1	7.5	19.5	5	M6×0.75	33.9	14 000	7 850	0.17
13/16	AR205-013	0.8125	2.0472	1.0630	0.5906	0.039	0.295	0.768	0.197	1/4-28UNF	1.3346	3 150	1 770	0.44
7/8	AR205-014	0.8750												0.42
15/16	AR205-015	0.9375												0.40
1	AR205-100	1.0000												0.37
30	AR206	30	62	30	18	1	9	21	5	M6×0.75	40.8	19 500	11 300	0.26
1 1/16	AR206-101	1.0625	2.4409	1.1811	0.7087	0.039	0.354	0.827	0.197	1/4-28UNF	1.6063	4 400	2 540	0.63
1 1/8	AR206-102	1.1250												0.61
1 3/16	AR206-103	1.1875												0.59
1 1/4	AR206-104	1.2500												0.57
35	AR207	35	72	35	19	1.5	9.5	25.5	6	M6×0.75	46.8	25 700	15 300	0.39
1 1/4	AR207-104	1.2500	2.8346	1.3780	0.7480	0.059	0.374	1.004	0.236	1/4-28UNF	1.8425	5 750	3 450	1.10
1 5/16	AR207-105	1.3125												0.97
1 3/8	AR207-106	1.3750												0.85
1 7/16	AR207-107	1.4375												0.73
40	AR208	40	80	40	22	1.5	11.0	29	8	M8×1	53	29 100	17 800	0.54
1 1/2	AR208-108	1.5000	3.1496	1.5748	0.8661	0.059	0.433	1.142	0.315	5/16-24UNF	2.0866	6 550	4 000	1.24
1 9/16	AR208-109	1.5625												1.15

Note (1) If relubricatable type is needed, please order with suffix "D1".

Ball bearings
Set screw type

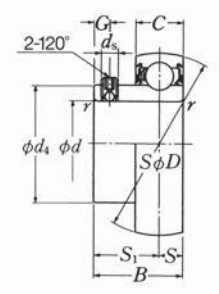

Shaft dia. mm inch	Bearing (1) number	Nominal dimensions mm inch d	D	B	C	r min.	S	S_1	G	d_s	d_4	Basic load ratings N lbf dynamic C_r	static C_{0r}	Mass kg lb
45	AR209	45	85	41.5	22	1.5	11	30.5	8	M8×1	57.5	32 500	20 400	0.61
1 5/8	AR209-110	1.6250												1.54
1 11/16	AR209-111	1.6875	3.3465	1.6339	0.8661	0.059	0.433	1.201	0.315	5/16-24UNF	2.2638	7 350	4 600	1.46
1 3/4	AR209-112	1.7500												1.39
50	AR210	80	90	43	22	1.5	11	32	9	M8×1	62.4	35 000	23 200	0.70
1 13/16	AR210-113	1.8125												1.76
1 7/8	AR210-114	1.8750	3.5433	1.6929	0.8661	0.059	0.433	1.260	0.354	5/16-24UNF	2.4567	7 900	5 200	1.68
1 15/16	AR210-115	1.9375												1.59
2	AR210-200	2.0000												1.50

Note (1) If relubricatable type is needed, please order with "D1".

Ball bearings
Eccentric locking collar type

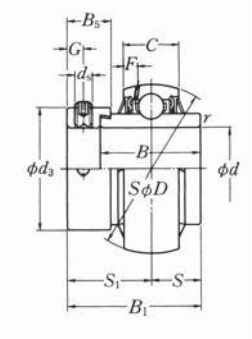

Shaft dia. mm / inch	Bearing (1) number	Nominal dimensions mm / inch d	D	B_1	B	C	r min.	S	S_1	G	d_s	d_3	Nominal dimensions mm / inch B_5	F	Basic load ratings N / lbf dynamic C_r	static C_{or}	Mass kg / lb
20	UEL204D1W3	20	47	43.7	34.2	17	1	17.1	26.6	4.8	M6×0.75	33	13.5	4.7	12 800	6 650	0.23
3/4	UEL204-012D1W3	0.7500	1.8504	1.720	1.3465	0.6693	0.039	0.673	1.047	0.189	1/4-28UNF	1.299	0.531	0.185	2 890	1 500	0.45
25	UEL205D1W3	25	52	44.4	34.9	17	1	17.45	26.9	4.8	M6×0.75	38	13.5	4.5	14 000	7 850	0.27
13/16	UEL205-013D1W3	0.8125															0.61
7/8	UEL205-014D1W3	0.8750	2.0472	1.748	1.3740	0.6693	0.039	0.687	1.059	0.189	1/4-28UNF	1.496	0.531	0.177	3 150	1 770	0.58
15/16	UEL205-015D1W3	0.9375															0.55
1	UEL205-100D1W3	1.0000															0.51
30	UEL206D1W3	30	62	48.4	36.5	19	1	18.25	30.1	6	M8×1	44.5	15.9	4.6	19 500	11 300	0.45
1 1/16	UEL206-101D1W3	1.0625															0.94
1 1/8	UEL206-102D1W3	1.1250	2.4409	1.906	1.4370	0.7480	0.039	0.719	1.185	0.236	5/16-24UNF	1.752	0.626	0.181	4 400	2 540	0.89
1 3/16	UEL206-103D1W3	1.1875															0.84
1 1/4	UEL206-104D1W3	1.2500															0.80
35	UEL207D1W3	35	72	51.1	37.6	20	1.5	18.8	32.3	6.8	M10×1.25	55.5	17.5	4.6	25 700	15 300	0.60
1 1/4	UEL207-104D1W3	1.2500															1.45
1 5/16	UEL207-105D1W3	1.3125	2.8346	2.012	1.4803	0.7874	0.059	0.740	1.272	0.268	3/8-24UNF	2.185	0.689	0.181	5 750	3 450	1.40
1 3/8	UEL207-106D1W3	1.3750															1.35
1 7/16	UEL207-107D1W3	1.4375															1.28
40	UEL208D1W3	40	80	56.3	42.8	21	1.5	21.4	34.9	6.8	M10×1.25	60	18.3	4.5	29 100	17 800	0.78
1 1/2	UEL208-108D1W3	1.5000	3.1496	2.217	1.6850	0.8268	0.059	0.843	1.374	0.268	3/8-24UNF	2.362	0.720	0.177	6 550	4 000	1.90
1 9/16	UEL208-109D1W3	1.5625															1.82
45	UEL209D1W3	45	85	56.3	42.8	22	1.5	21.4	34.9	6.8	M10×1.25	63.5	18.3	4.9	32 500	20 400	0.80
1 5/8	UEL209-110D1W3	1.6250															2.05
1 11/16	UEL209-111D1W3	1.6875	3.3465	2.217	1.6850	0.8661	0.059	0.843	1.374	0.268	3/8-24UNF	2.500	0.720	0.193	7 350	4 600	1.97
1 3/4	UEL209-112D1W3	1.7500															1.88

Note (1) These numbers indicate relubricatable type. If maintenance free type is needed, please order without suffix "D1".

Ball bearings
Eccentric locking collar type

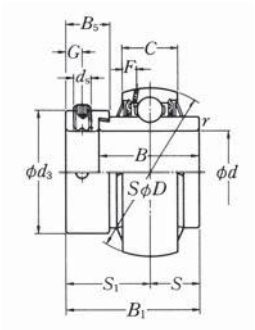

Shaft dia. mm inch	Bearing (1) number	Nominal dimensions mm inch d	D	B_1	B	C	r min.	S	S_1	G	d_s	d_3	Nominal dimensions mm inch B_5	F	Basic load ratings N lbf dynamic C_r	static C_{or}	Mass kg lb
50	UEL210D1W3	50	90	62.7	49.2	24	1.5	24.6	38.1	6.8	M10×1.25	69.5	18.3	5.9	35 000	23 200	0.96
1 13/16	UEL210-113D1W3	1.8125															2.46
1 7/8	UEL210-114D1W3	1.8750	3.5433	2.469	1.9370	0.9449	0.059	0.969	1.500	0.268	3/8-24UNF	2.736	0.720	0.232	7 900	5 200	2.36
1 15/16	UEL210-115D1W3	1.9375															2.25
2	UEL210-200D1W3	2.0000															2.09
55	UEL211D1W3	55	100	71.4	55.5	25	2	27.75	43.6	8	M10×1.25	76	20.7	6.0	43 500	29 200	1.32
2	UEL211-200D1W3	2.0000															3.28
2 1/16	UEL211-201D1W3	2.0625	3.9370	2.811	2.1850	0.9843	0.079	1.093	1.717	0.315	3/8-24UNF	2.992	0.815	0.236	9 750	6 550	3.12
2 1/8	UEL211-202D1W3	2.1250															3.02
2 3/16	UEL211-203D1W3	2.1875															2.90
60	UEL212D1W3	60	110	77.8	61.9	27	2	30.95	46.8	8	M10×1.25	84	22.3	6.2	52 500	36 000	1.79
2 1/4	UEL212-204D1W3	2.2500															4.38
2 5/16	UEL212-205D1W3	2.3125	4.3307	3.063	2.4370	1.0630	0.079	1.219	1.843	0.315	3/8-24UNF	3.307	0.878	0.244	11 800	8 150	4.22
2 3/8	UEL212-206D1W3	2.3750															4.05
2 7/16	UEL212-207D1W3	2.4375															3.88
65	UEL213D1W3	65	120	85.7	68.3	32	2	34.15	51.55	8.7	M10×1.25	97	23.8	8.7	57 500	40 000	2.54
2 1/2	UEL213-208D1W3	2.5000	4.7244	3.374	2.6890	1.2598	0.079	1.344	2.030	0.343	3/8-24UNF	3.819	0.937	0.343	12 900	9 000	5.47
2 9/16	UEL213-209D1W3	2.5625															5.30
70	UEL214D1W3	70	125	85.7	68.3	33	2	34.15	51.55	8.7	M10×1.25	97	23.8	8.8	62 000	44 000	2.47
2 5/8	UEL214-210D1W3	2.6250															5.67
2 11/16	UEL214-211D1W3	2.6875	4.9213	3.374	2.6890	1.2992	0.079	1.344	2.030	0.343	3/8-24UNF	3.819	0.937	0.346	14 000	9 900	5.45
2 3/4	UEL214-212D1W3	2.7500															5.18
75	UEL215D1W3	75	130	92	74.6	34	2	37.3	54.7	8.7	M10×1.25	102	23.8	9.0	66 000	49 500	2.68
2 13/16	UEL215-213D1W3	2.8125															6.39
2 7/8	UEL215-214D1W3	2.8750	5.1181	3.622	2.9370	1.3386	0.079	1.469	2.154	0.343	3/8-24UNF	4.016	0.937	0.354	14 900	11 100	6.15
2 15/16	UEL215-215D1W3	2.9375															5.91
3	UEL215-300D1W3	3.0000															5.60

Note (1) These numbers indicate relubricatable type. If maintenance free type is needed, please order without suffix "D1".

Ball bearings
Eccentric locking collar type

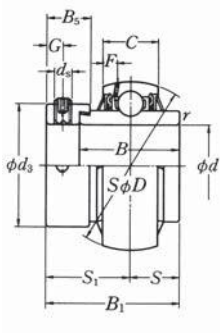

Shaft dia. mm inch	Bearing (1) number	Nominal dimensions mm inch d	D	B_1	B	C	r min.	S	S_1	G	d_s	d_3	Nominal dimensions mm inch B_5	F	Basic load ratings N lbf dynamic C_r	static C_{or}	Mass kg lb
25	UEL305D1W3	25	62	46.8	34.9	20	1.5	16.7	30.1	6	M8×1	42.8	15.9	5.0	21 200	10 900	0.43
13/16	UEL305-013D1W3	0.8125															1.09
7/8	UEL305-014D1W3	0.8750	2.4409	1.843	1.3740	0.7874	0.059	0.657	1.185	0.236	5/16-24UNF	1.685	0.626	0.197	4 750	2 460	1.05
15/16	UEL305-015D1W3	0.9375															1.01
1	UEL305-100D1W3	1.0000															0.96
30	UEL306D1W3	30	72	50	36.5	23	1.5	17.5	32.5	6.7	M8×1	50	17.5	5.9	26 700	15 000	0.69
1 1/16	UEL306-101D1W3	1.0625															1.57
1 1/8	UEL306-102D1W3	1.1250	2.8346	1.969	1.4370	0.9055	0.059	0.689	1.280	0.264	5/16-24UNF	1.969	0.689	0.232	6 000	3 400	1.51
1 3/16	UEL306-103D1W3	1.1875															1.45
35	UEL307D1W3	35	80	51.6	38.1	25	2	18.3	33.3	6.7	M8×1	55	17.5	6.8	33 500	19 100	0.78
1 1/4	UEL307-104D1W3	1.2500															1.92
1 5/16	UEL307-105D1W3	1.3125	3.1496	2.031	1.5000	0.9843	0.079	0.720	1.311	0.264	5/16-24UNF	2.165	0.689	0.268	7 500	4 300	1.84
1 3/8	UEL307-106D1W3	1.3750															1.77
1 7/16	UEL307-107D1W3	1.4375															1.69
40	UEL308D1W3	40	90	57.1	41.3	27	2	19.8	37.3	8	M10×1.25	63.5	20.6	7.4	40 500	24 000	1.08
1 1/2	UEL308-108D1W3	1.5000	3.5433	2.248	1.6260	1.0630	0.079	0.780	1.469	0.315	3/8-24UNF	2.500	0.811	0.291	9 150	5 400	2.58
1 9/16	UEL308-109D1W3	1.5625															2.49
45	UEL309D1W3	45	100	58.7	42.9	29	2	19.8	38.9	8	M10×1.25	70	20.6	7.4	53 000	32 000	1.40
1 5/8	UEL309-110D1W3	1.6250															3.36
1 11/16	UEL309-111D1W3	1.6875	3.9370	2.311	1.6890	1.1417	0.079	0.780	1.531	0.315	3/8-24UNF	2.756	0.811	0.291	11 900	7 200	3.26
1 3/4	UEL309-112D1W3	1.7500															3.15
50	UEL310D1W3	50	110	66.6	49.2	32	2.5	24.6	42	8.7	M10×1.25	76.2	22.2	8.1	62 000	38 500	1.84
1 13/16	UEL310-113D1W3	1.8125															4.40
1 7/8	UEL310-114D1W3	1.8750	4.3307	2.622	1.9370	1.2598	0.098	0.969	1.654	0.343	3/8-24UNF	3.000	0.874	0.319	13 900	8 600	4.29
1 15/16	UEL310-115D1W3	1.9375															4.15

Note (1) These numbers indicate relubricatable type. If maintenance free type is needed, please order without suffix "D1".

Ball bearings
Eccentric locking collar type

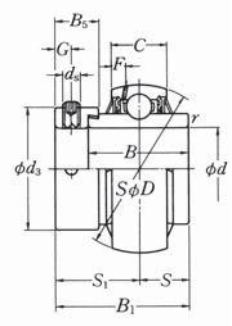

Shaft dia. mm inch	Bearing (1) number	Nominal dimensions mm inch d	D	B_1	B	C	r min.	S	S_1	G	d_s	d_3	Nominal dimensions mm inch B_5	F	Basic load ratings N lbf dynamic C_r	static C_{or}	Mass kg lb
55	UEL311D1W3	55	120	73	55.6	34	2.5	27.8	45.2	8.7	M10×1.25	83	22.2	8.5	71 500	45 000	2.36
2	UEL311-200D1W3	2.0000															5.58
2 1/16	UEL311-201D1W3	2.0625	4.7244	2.874	2.1890	1.3386	0.098	1.094	1.780	0.343	3/8-24UNF	3.268	0.874	0.335	16 100	10 100	5.39
2 1/8	UEL311-202D1W3	2.1250															5.25
2 3/16	UEL311-203D1W3	2.1875															5.08
60	UEL312D1W3	60	130	79.4	61.9	36	2.5	30.95	48.45	8.7	M10×1.25	89	23.9	9.0	82 000	52 000	2.94
2 1/4	UEL312-204D1W3	2.2500															6.80
2 5/16	UEL312-205D1W3	2.3125	5.1181	3.126	2.4370	1.1473	0.098	1.219	1.907	0.343	3/8-24UNF	3.504	0.941	0.354	18 400	11 700	6.65
2 3/8	UEL312-206D1W3	2.3750															6.48
2 7/16	UEL312-207D1W3	2.4375															6.19
65	UEL313D1W3	65	140	85.7	65.1	39	2.5	32.55	53.15	10.3	M12×1.5	97	27	10.1	92 500	60 000	3.67
2 1/2	UEL313-208D1W3	2.5000	5.5118	3.374	2.5630	1.5354	0.098	1.281	2.093	0.406	1/2-20UNF	3.819	1.063	0.398	20 800	13 400	8.49
2 9/16	UEL313-209D1W3	2.5625															8.27
70	UEL314D1W3	70	150	92.1	68.3	41	2.5	34.15	57.95	10.3	M12×1.5	102	30.2	10.5	104 000	68 000	4.40
2 5/8	UEL314-210D1W3	2.6250															10.4
2 11/16	UEL314-211D1W3	2.6875	5.9055	3.626	2.6890	1.6142	0.098	1.344	2.281	0.406	1/2-20UNF	4.016	1.189	0.413	23 400	15 300	10.2
2 3/4	UEL314-212D1W3	2.7500															9.96
75	UEL315D1W3	75	160	100	74.6	43	2.5	37.3	62.7	12.7	M16×1.5	113	31.8	11.0	113 000	77 000	5.34
2 13/16	UEL315-213D1W3	2.8125															13.2
2 7/8	UEL315-214D1W3	2.8750	6.2992	3.937	2.9370	1.6929	0.098	1.469	2.469	0.500	5/8-18UNF	4.449	1.252	0.433	25 500	17 400	12.9
2 15/16	UEL315-215D1W3	2.9375															12.7
3	UEL315-300D1W3	3.0000															12.5
80	UEL316D1W3	80	170	106.4	81	45	2.5	40.5	65.9	12.7	M16×1.5	119	31.8	11.4	123 000	86 500	6.70
3 1/16	UEL316-301D1W3	3.0625															14.9
3 1/8	UEL316-302D1W3	3.1250	6.6929	4.189	3.1890	1.7717	0.098	1.594	2.594	0.500	5/8-18UNF	4.685	1.252	0.449	27 600	19 500	14.8
3 3/16	UEL316-303D1W3	3.1875															14.6

Note (1) These numbers indicate relubricatable type. If maintenance free type is needed, please order without suffix "D1".

Ball bearings
Eccentric locking collar type

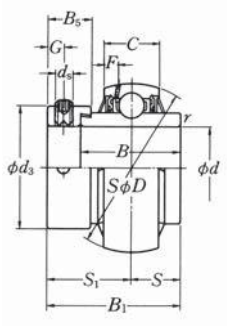

Shaft dia. mm inch	Bearing (1) number	Nominal dimensions mm inch d	D	B_1	B	C	r min.	S	S_1	G	d_s	d_3	Nominal dimensions mm inch B_5	F	Basic load ratings N lbf dynamic C_r	static C_{or}	Mass kg lb
85	UEL317D1W3	85	180	109.5	84.1	47	3	42.05	67.45	12.7	M16×1.5	127	31.8	12.0	133 000	97 000	8.00
3 1/4	UEL317-304D1W3	3.2500															18.0
3 5/16	UEL317-305D1W3	3.3125	7.0866	4.311	3.3110	1.8504	0.118	1.656	2.656	0.500	5/8-18UNF	5.000	1.252	0.472	29 800	21 800	17.7
3 7/16	UEL317-307D1W3	3.4375															17.0
90	UEL318D1W3	90	190	115.9	87.3	49	3	43.65	72.25	14.3	M20×1.5	133	36.5	12.3	143 000	107 000	9.10
3 7/16	UEL318-307D1W3	3.4375	7.4803	4.563	3.4370	1.9291	0.118	1.719	2.844	0.563	3/4-16UNF	5.236	1.437	0.484	32 000	24 100	20.7
3 1/2	UEL318-308D1W3	3.5000															20.2
95	UEL319D1W3	95	200	122.3	93.7	51	3	38.9	83.4	14.3	M20×1.5	140	36.5	12.8	153 000	119 000	10.4
3 5/8	UEL319-310D1W3	3.6250															23.4
3 11/16	UEL319-311D1W3	3.6875	7.8740	4.815	3.6890	2.0079	0.118	1.531	3.283	0.563	3/4-16UNF	5.512	1.437	0.504	34 500	26 600	23.0
3 3/4	UEL319-312D1W3	3.7500															22.6
100	UEL320D1W3	100	215	128.6	100	55	3	50	78.6	14.3	M20×1.5	146	36.5	13.5	173 000	141 000	13.0
3 13/16	UEL320-313D1W3	3.8125															28.5
3 7/8	UEL320-314D1W3	3.8750	8.4646	5.063	3.9370	2.1654	0.118	1.969	3.094	0.563	3/4-16UNF	5.748	1.437	0.531	39 000	31 500	28.0
3 15/16	UEL320-315D1W3	3.9375															27.6
4	UEL320-400D1W3	4.0000															27.0
105	UEL321D1W3	105	225	139.7	104.8	57	3	48.4	91.3	17.5	M20×1.5	157	42.8	13.9	184 000	153 000	14.6
110	UEL322D1W3	110	240	141.3	106.4	59	3	49.2	92.1	17.5	M20×1.5	168	42.8	13.9	205 000	179 000	17.2

Note (1) These numbers indicate relubricatable type. If maintenance free type is needed, please order without suffix "D1".

Ball bearings
Eccentric locking collar type

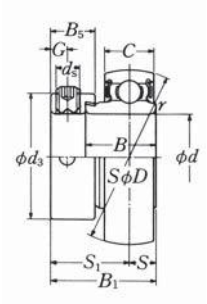

Shaft dia. mm inch	Bearing (1) number	Nominal dimensions mm inch d	D	B_1	B	C	r min.	S	S_1	G	d_s	d_3	Nominal dimensions mm inch B_5	Basic load ratings N lbf dynamic C_r	static C_{or}	Mass kg lb
12	AEL201W3	12	40	28.6	19	12	0.6	6.5	22.1	4.8	M6×0.75	29	13.6	9 600	4 600	0.12
1/2	AEL201-008W3	0.5000	1.5748	1.126	0.7480	0.4724	0.024	0.256	0.870	0.189	1/4-28UNF	1.142	0.535	2 160	1 030	0.26
15	AEL202W3	15	40	28.6	19	12	0.6	6.5	22.1	4.8	M6×0.75	29	13.6	9 600	4 600	0.11
9/16	AEL202-009W3	0.5625	1.5748	1.126	0.7480	0.4724	0.024	0.256	0.870	0.189	1/4-28UNF	1.142	0.535	2 160	1 030	0.26
5/8	AEL202-010W3	0.6250														0.24
17	AEL203W3	17	40	28.6	19	12	0.6	6.5	22.1	4.8	M6×0.75	29	13.6	9 600	4 600	0.10
11/16	AEL203-011W3	0.6875	1.5748	1.126	0.7480	0.4724	0.024	0.256	0.870	0.189	1/4-28UNF	1.142	0.535	2 160	1 030	0.23
20	AEL204W3	20	47	31	21.5	14	1	7.5	23.5	4.8	M6×0.75	33	13.5	12 800	6 650	0.17
3/4	AEL204-012W3	0.7500	1.8504	1.220	0.8465	0.5512	0.039	0.295	0.925	0.189	1/4-28UNF	1.299	0.531	2 890	1 500	0.35
25	AEL205W3	25	52	31	21.5	15	1	7.5	23.5	4.8	M6×0.75	38	13.5	14 000	7 850	0.22
13/16	AEL205-013W3	0.8125	2.0472	1.220	0.8465	0.5906	0.039	0.295	0.925	0.189	1/4-28UNF	1.496	0.531	3 150	1 770	0.51
7/8	AEL205-014W3	0.8750														0.48
15/16	AEL205-015W3	0.9375														0.45
1	AEL205-100W3	1.0000														0.42
30	AEL206W3	30	62	35.7	23.8	16	1	9	26.7	6	M8×1	44.5	15.9	19 500	11 300	0.31
1 1/16	AEL206-101W3	1.0625	2.4409	1.406	0.9370	0.6299	0.039	0.354	1.051	0.236	5/16-24UNF	1.752	0.626	4 400	2 540	0.74
1 1/8	AEL206-102W3	1.1250														0.73
1 3/16	AEL206-103W3	1.1875														0.66
1 1/4	AEL206-104W3	1.2500														0.61
35	AEL207W3	35	72	38.9	25.4	17	1.5	9.5	29.4	6.8	M10×1.25	55.5	17.5	25 700	15 300	0.50
1 1/4	AEL207-104W3	1.2500	2.8346	1.531	1.0000	0.6693	0.059	0.374	1.157	0.268	3/8-24UNF	2.185	0.689	5 750	3 450	1.15
1 5/16	AEL207-105W3	1.3125														1.10
1 3/8	AEL207-106W3	1.3750														1.04
1 7/16	AEL207-107W3	1.4375														0.98
40	AEL208W3	40	80	43.7	30.2	18	1.5	11	32.7	6.8	M10×1.25	60	18.3	29 100	17 800	0.66
1 1/2	AEL208-108W3	1.5000	3.1496	1.720	1.1890	0.7087	0.059	0.433	1.287	0.268	3/8-24UNF	2.362	0.720	6 550	4 000	1.41
1 9/16	AEL208-109W3	1.5625														1.34

Note (1) If relubricatable type is needed, please order with suffix "D1".

Ball bearings
Eccentric locking collar type

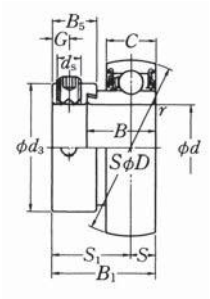

Shaft dia. mm inch	Bearing (1) number	Nominal dimensions mm inch d	D	B_1	B	C	r min.	S	S_1	G	d_s	d_3	Nominal dimensions mm inch B_5	Basic load ratings N lbf dynamic C_r	static C_{or}	Mass kg lb
12	JEL201W3	12	40	28.6	19	13	0.6	6.5	22.1	4.8	M6×0.75	29	13.6	9 600	4 600	0.12
1/2	JEL201-008W3	0.5000	1.5748	1.126	0.7480	0.5118	0.024	0.256	0.870	0.189	1/4-28UNF	1.142	0.535	2 160	1 030	0.25
15	JEL202W3	15	40	28.6	19	13	0.6	6.5	22.1	4.8	M6×0.75	29	13.6	9 600	4 600	0.10
9/16	JEL202-009W3	0.5625	1.5748	1.126	0.7480	0.5118	0.024	0.256	0.870	0.189	1/4-28UNF	1.142	0.535	2 160	1 030	0.24
5/8	JEL202-010W3	0.6250														0.22
17	JEL203W3	17	40	28.6	19	13	0.6	6.5	22.1	4.8	M6×0.75	29	13.6	9 600	4 600	0.09
11/16	JEL203-011W3	0.6875	1.5748	1.126	0.7480	0.5118	0.024	0.256	0.870	0.189	1/4-28UNF	1.142	0.535	2 160	1 030	0.20
20	JEL204W3	20	47	31	21.5	15	1	7.5	23.5	4.8	M6×0.75	33	13.5	12 800	6 650	0.16
3/4	JEL204-012W3	0.7500	1.8504	1.220	0.8465	0.5906	0.039	0.295	0.925	0.189	1/4-28UNF	1.299	0.531	2 890	1 500	0.37
25	JEL205W3	25	52	31	21.5	15	1	7.5	23.5	4.8	M6×0.75	38	13.5	14 000	7 850	0.19
13/16	JEL205-013W3	0.8125														0.50
7/8	JEL205-014W3	0.8750	2.0472	1.220	0.8465	0.5906	0.039	0.295	0.925	0.189	1/4-28UNF	1.496	0.531	3 150	1 770	0.47
15/16	JEL205-015W3	0.9375														0.44
1	JEL205-100W3	1.0000														0.41
30	JEL206W3	30	62	35.7	23.8	18	1	9	26.7	6	M8×1	44.5	15.9	19 500	11 300	0.33
1 1/16	JEL206-101W3	1.0625														0.78
1 1/8	JEL206-102W3	1.1250	2.4409	1.406	0.9370	0.7087	0.039	0.354	1.051	0.236	5/16-24UNF	1.752	0.626	4 400	2 540	0.73
1 3/16	JEL206-103W3	1.1875														0.69
1 1/4	JEL206-104W3	1.2500														0.64
35	JEL207W3	35	72	38.9	25.4	19	1.5	9.5	29.4	6.8	M10×1.25	55.5	17.5	25 700	15 300	0.50
1 1/4	JEL207-104W3	1.2500														1.22
1 5/16	JEL207-105W3	1.3125	2.8346	1.531	1.0000	0.7480	0.059	0.374	1.157	0.268	3/8-24UNF	2.185	0.689	5 750	3 450	1.16
1 3/8	JEL207-106W3	1.3750														1.11
1 7/16	JEL207-107W3	1.4375														1.05
40	JEL208W3	40	80	43.7	30.2	22	1.5	11	32.7	6.8	M10×1.25	60	18.3	29 100	17 800	0.65
1 1/2	JEL208-108W3	1.5000	3.1496	1.720	1.1890	0.8661	0.059	0.433	1.287	0.268	3/8-24UNF	2.362	0.720	6 550	4 000	1.53
1 9/16	JEL208-109W3	1.5625														1.46

Note (1) If relubricatable type is needed, please order with suffix "D1".

Ball bearings
Eccentric locking collar type

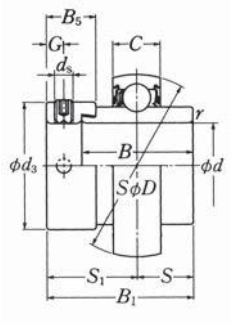

Shaft dia. mm inch	Bearing (1) number	Nominal dimensions mm inch d	D	B_1	B	C	r min.	S	S_1	G	d_s	d_3	Nominal dimensions mm inch B_5	Basic load ratings N lbf dynamic C_r	static C_{or}	Mass kg lb
20	REL204W3	20	47	43.7	34.2	15	1	17.1	26.6	4.8	M6×0.75	33.0	13.5	12 800	6 650	0.22
3/4	REL204-012W3	0.7500	1.8504	1.720	1.3465	0.5906	0.039	0.673	1.047	0.189	1/4-28UNF	1.299	0.531	2 890	1 500	0.43
25	REL205W3	25	52	44.4	34.9	15	1	17.45	26.9	4.8	M6×0.75	38.0	13.5	14 000	7 850	0.26
13/16	REL205-013W3	0.8125														0.59
7/8	REL205-014W3	0.8750	2.0472	1.748	1.3740	0.5906	0.039	0.687	1.059	0.189	1/4-28UNF	1.496	0.531	3 150	1 770	0.56
15/16	REL205-015W3	0.9375														0.53
1	REL205-100W3	1.0000														0.49
30	REL206W3	30	62	48.4	36.5	18	1	18.25	30.1	6	M8×1	44.5	15.9	19 500	11 300	0.39
1 1/16	REL206-101W3	1.0625														0.92
1 1/8	REL206-102W3	1.1250	2.4409	1.906	1.4370	0.7087	0.039	0.719	1.185	0.236	5/16-24UNF	1.752	0.626	4 400	2 540	0.87
1 3/16	REL206-103W3	1.1875														0.82
1 1/4	REL206-104W3	1.2500														0.78
35	REL207W3	35	72	51.1	37.6	19	1.5	18.8	32.3	6.8	M10×1.25	55.5	17.5	25 700	15 300	0.59
1 1/4	REL207-104W3	1.2500														1.41
1 5/16	REL207-105W3	1.3125	2.8346	2.012	1.4803	0.7480	0.059	0.740	1.272	0.268	3/8-24UNF	2.185	0.689	5 750	3 450	1.36
1 3/8	REL207-106W3	1.3750														1.31
1 7/16	REL207-107W3	1.4375														1.24
40	REL208W3	40	80	56.3	42.8	22	1.5	21.4	34.9	6.8	M10×1.25	60.0	18.3	29 100	17 800	0.76
1 1/2	REL208-108W3	1.5000	3.1496	2.217	1.6850	0.8661	0.059	0.843	1.374	0.268	3/8-24UNF	2.362	0.720	6 550	4 000	1.88
1 9/16	REL208-109W3	1.5625														1.80
45	REL209W3	45	85	56.3	42.8	22	1.5	21.4	34.9	6.8	M10×1.25	63.5	18.3	32 500	20 400	0.78
1 5/8	REL209-110W3	1.6250														2.01
1 11/16	REL209-111W3	1.6875	3.3465	2.217	1.6850	0.8661	0.059	0.843	1.374	0.268	3/8-24UNF	2.500	0.720	7 350	4 600	1.93
1 3/4	REL209-112W3	1.7500														1.84

Note (1) If relubricatable type is needed, please order with suffix "D1".

Ball bearings
Eccentric locking collar type

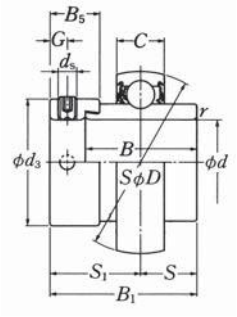

Shaft dia. mm inch	Bearing (1) number	Nominal dimensions mm inch d	D	B_1	B	C	r min.	S	S_1	G	d_s	d_3	Nominal dimensions mm inch B_5	Basic load ratings N lbf dynamic C_r	static C_{or}	Mass kg lb
50	REL210W3	50	90	62.7	49.2	22	1.5	24.6	38.1	6.8	M10×1.25	69.5	18.3	35 000	23 200	0.96
1 13/16	REL210-113W3	1.8125														2.42
1 7/8	REL210-114W3	1.8750	3.5433	2.469	1.9370	0.8661	0.059	0.969	1.500	0.268	3/8-24UNF	2.736	0.720	7 900	5 200	2.32
1 15/16	REL210-115W3	1.9375														2.21
2	REL210-200W3	2.0000														2.05
55	REL211W3	55	100	71.4	55.5	24	2	27.75	43.6	8	M10×1.25	76	20.7	43 500	29 200	1.28
2	REL211-200W3	2.0000														3.21
2 1/16	REL211-201W3	2.0625	3.9370	2.811	2.1850	0.9449	0.079	1.093	1.717	0.315	3/8-24UNF	2.992	0.815	9 750	6 550	3.05
2 1/8	REL211-202W3	2.1250														2.95
2 3/16	REL211-203W3	2.1875														2.83
60	REL212W3	60	110	77.8	61.9	27	2	30.95	46.8	8	M10×1.25	84	22.3	52 500	36 000	1.83
2 1/4	REL212-204W3	2.2500														4.29
2 5/16	REL212-205W3	2.3125	4.3307	3.063	2.4370	1.0630	0.079	1.219	1.843	0.315	3/8-24UNF	3.307	0.878	11 800	8 150	4.13
2 3/8	REL212-206W3	2.3750														3.96
2 7/16	REL212-207W3	2.4375														3.79

Note (1) If relubricatable type is needed, please order with suffix "D1".

Ball bearings
Adapter type

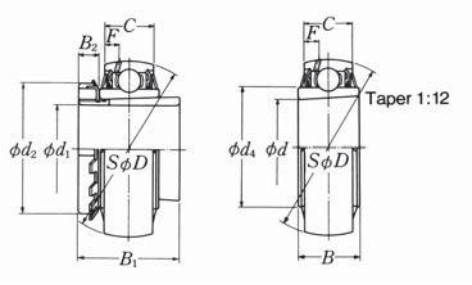

UK2···D1;H, HA, HE, HS UK2···D1

Shaft dia. mm inch	Bearing (1)(2)(3) number	Nominal dimensions mm inch d	D	B	C	d_4	d_1	B_1	B_2	d_2	F	Basic load ratings N lbf dynamic C_r	static C_{or}	Mass kg lb
20	UK205D1;H2305X	25	52	23	17	33.9	20	35	8	38	4.5	14 000	7 850	0.23
3/4	UK205D1;HE2305	0.9843	2.0472	0.9055	0.6693	1.335	3/4	1.378	0.315	1.496	0.177	3 150	1 770	0.57
25	UK206D1;H2306X	30	62	26	19	40.8	25	38	8	45	4.6	19 500	11 300	0.36
7/8	UK206D1;HS2306	1.1811	2.4409	1.0236	0.7480	1.606	7/8	1.496	0.315	1.772	0.181	4 400	2 540	0.86
1	UK206D1;HE2306X						1							0.78
30	UK207D1;H2307X	35	72	29	20	46.8	30	43	9	52	4.6	25 700	15 300	0.55
1 1/8	UK207D1;HS2307	1.3780	2.8346	1.1417	0.7874	1.843	1 1/8	1.693	0.354	2.047	0.181	5 750	3 450	1.30
35	UK208D1;H2308X	40	80	31	21	53	35	46	10	58	4.5	29 100	17 800	0.74
1 1/4	UK208D1;HE2308X	1.5748	3.1496	1.2205	0.8268	2.087	1 1/4	1.811	0.394	2.283	0.177	6 550	4 000	1.77
1 3/8	UK208D1;HS2308X						1 3/8							1.63
40	UK209D1;H2309X	45	85	31	22	57.5	40	50	11	65	4.9	32 500	20 400	0.80
1 7/16	UK209D1;HA2309						1 7/16							2.01
1 1/2	UK209D1;HE2309X	1.7717	3.3465	1.2205	0.8661	2.264	1 1/2	1.969	0.433	2.559	0.193	7 350	4 600	1.93
1 5/8	UK209D1;HS2309X						1 5/8							1.76
45	UK210D1;H2310X	50	90	32	24	62.4	45	55	12	70	5.9	35 000	23 200	0.94
1 5/8	UK210D1;HS2310						1 5/8							2.38
1 11/16	UK210D1;HA2310	1.9685	3.5433	1.2598	0.9449	2.457	1 11/16	2.165	0.472	2.756	0.232	7 900	5 200	2.28
1 3/4	UK210D1;HE2310X						1 3/4							2.18
50	UK211D1;H2311X	55	100	35	25	69	50	59	12	75	6.0	43 500	29 200	1.22
1 7/8	UK211D1;HS2311						1 7/8							2.96
1 15/16	UK211D1;HA2311	2.1654	3.9370	1.3780	0.9843	2.717	1 15/16	2.323	0.472	2.953	0.236	9 750	6 550	2.84
2	UK211D1;HE2311XY						2							2.70
55	UK212D1;H2312X	60	110	38	27	77	55	62	13	80	6.2	52 500	36 000	1.54
2 1/8	UK212D1;HS2312	2.3622	4.3307	1.4961	1.0630	3.031	2 1/8	2.441	0.512	3.150	0.244	11 800	8 150	3.60

Notes (1) These numbers indicate relubricatable type. If maintenance free type is needed, please order without suffix "D1".
(2) Adapter number with suffix "X" means a narrow slot type adapter sleeve.
In this case the lock washer with the straight inner prong should be used.
(3) For HE2311XY, screw thread pitch different from the standard is applied, because of the thin thread section of sleeve.
To distinguish it, a suffix "Y" is added.

Ball bearings
Adapter type

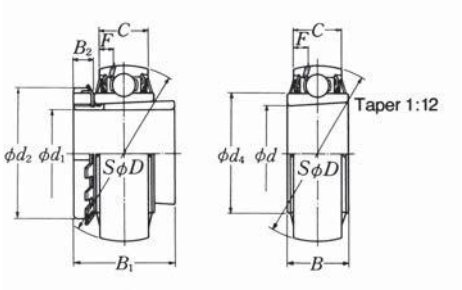

UK2···D1;H, HA, HE, HS UK2···D1

Shaft dia. mm inch	Bearing (1)(2) number	Nominal dimensions mm inch d	D	B	C	d_4	d_1	B_1	B_2	d_2	F	Basic load ratings N lbf dynamic C_r	static C_{or}	Mass kg lb
60	UK213D1;H2313X	65	120	40	32	82.5	60	65	14	85	8.7	57 500	40 000	2.00
2 3/16	UK213D1;HA2313						2 3/16							4.86
2 1/4	UK213D1;HE2313X	2.5591	4.7244	1.5748	1.2598	3.248	2 1/4	2.559	0.551	3.346	0.343	12 900	9 000	4.70
2 3/8	UK213D1;HS2313X						2 3/8							4.38
65	UK215D1;H2315X	75	130	44	34	93	65	73	15	98	9.0	66 000	49 500	2.56
2 7/16	UK215D1;HA2315	2.9528	5.1181	1.7323	1.3386	3.661	2 7/16	2.874	0.591	3.858	0.354	14 900	11 100	6.04
2 1/2	UK215D1;HE2315X						2 1/2							5.84
70	UK216D1;H2316X	80	140	45	35	98.1	70	78	17	105	9.5	72 500	53 000	3.23
2 11/16	UK216D1;HA2316	3.1496	5.5118	1.7717	1.3780	3.862	2 11/16	3.071	0.669	4.134	0.374	16 300	11 900	7.38
2 3/4	UK216D1;HE2316X						2 3/4							7.14
75	UK217D1;H2317X	85	150	46	36	106.4	75	82	18	110	10.1	83 500	64 000	3.93
2 15/16	UK217D1;HA2317X	3.3465	5.9055	1.8110	1.4173	4.189	2 15/16	3.228	0.709	4.331	0.398	18 700	14 300	8.73
3	UK217D1;HE2317X						3							8.46
80	UK218D1;H2318X	90	160	47	37	111.6	80	86	18	120	9.8	96 000	71 500	4.51
3 3/16	UK218D1;HA2318X	3.5433	6.2992	1.8504	1.4567	4.394	3 3/16	3.386	0.709	4.724	0.386	21 600	16 100	11.0

Notes (1) These numbers indicate relubricatable type. If maintenance free type is needed, please order without suffix "D1".
(2) Adapter number with suffix "X" means a narrow slot type adapter sleeve.
In this case the lock washer with the straight inner prong should be used.

Ball bearings
Adapter type

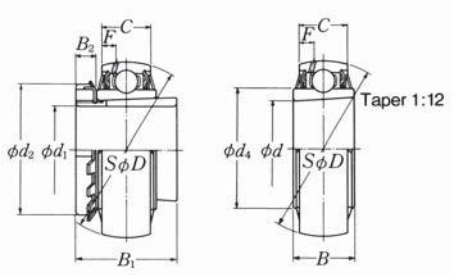

UK3···D1;H, HA, HE, HS UK3···D1

Shaft dia. mm inch	Bearing (1)(2)(3) number	Nominal dimensions mm inch d	D	B	C	d_4	d_1	B_1	B_2	d_2	F	Basic load ratings N lbf dynamic C_r	static C_{or}	Mass kg lb
20	UK305D1;H2305X	25	62	26	20	36.8	20	35	8	38	5.0	21 200	10 900	0.36
3/4	UK305D1;HE2305	0.9843	2.4409	1.0236	0.7874	1.449	3/4	1.378	0.315	1.496	0.197	4 750	2 460	0.81
25	UK306D1;H2306X	30	72	29	23	44.9	25	38	8	45	5.9	26 700	15 000	0.59
7/8	UK306D1;HS2306	1.1811	2.8346	1.1417	0.9055	1.768	7/8	1.496	0.315	1.772	0.232	6 000	3 400	1.37
1	UK306D1;HE2306X						1							1.29
30	UK307D1;H2307X	35	80	33	25	49.4	30	43	9	52	6.8	33 500	19 100	0.75
1 1/8	UK307D1;HS2307	1.3780	3.1496	1.2992	0.9843	1.945	1 1/8	1.693	0.354	2.047	0.268	7 500	4 300	1.70
35	UK308D1;H2308X	40	90	34	27	56	35	46	10	58	7.4	40 500	24 000	1.00
1 1/4	UK308D1;HE2308X	1.5748	3.5433	1.3386	1.0630	2.205	1 1/4	1.811	0.394	2.283	0.291	9 150	5 400	2.38
1 3/8	UK308D1;HS2308X						1 3/8							2.25
40	UK309D1;H2309X	45	100	37	29	63.5	40	50	11	65	7.4	53 000	32 000	1.28
1 7/16	UK309D1;HA2309						1 7/16							3.22
1 1/2	UK309D1;HE2309X	1.7717	3.9370	1.4567	1.1417	2.500	1 1/2	1.969	0.433	2.559	0.291	11 900	7 200	3.14
1 5/8	UK309D1;HS2309X						1 5/8							2.97
45	UK310D1;H2310X	50	110	41	32	70.6	45	55	12	70	8.1	62 000	38 500	1.72
1 5/8	UK310D1;HS2310						1 5/8							3.95
1 11/16	UK310D1;HA2310	1.9685	4.3307	1.6142	1.2598	2.780	1 11/16	2.165	0.472	2.756	0.319	13 900	8 600	3.85
1 3/4	UK310D1;HE2310X						1 3/4							3.74
50	UK311D1;H2311X	55	120	44	34	76.6	50	59	12	75	8.5	71 500	45 000	2.06
1 7/8	UK311D1;HS2311						1 7/8							4.73
1 15/16	UK311D1;HA2311	2.1654	4.7244	1.7323	1.3386	3.016	1 15/16	2.323	0.472	2.953	0.335	16 100	10 100	4.60
2	UK311D1;HE2311XY						2							4.46
55	UK312D1;H2312X	60	130	47	36	82.7	55	62	13	80	9.0	82 000	52 000	2.58
2 1/8	UK312D1;HS2312	2.3622	5.1181	1.8504	1.4173	3.256	2 1/8	2.441	0.512	3.150	0.354	18 400	11 700	5.67

Notes (1) These numbers indicate relubricatable type. If maintenance free type is needed, please order without suffix "D1".
(2) Adapter number with suffix "X" means a narrow slot type adapter sleeve.
In this case the lock washer with the straight inner prong should be used.
(3) For HE2311XY, screw thread pitch different from the standard is applied, because of the thin thread section of sleeve.
To distinguish it, a suffix "Y" is added.

Ball bearings
Adapter type

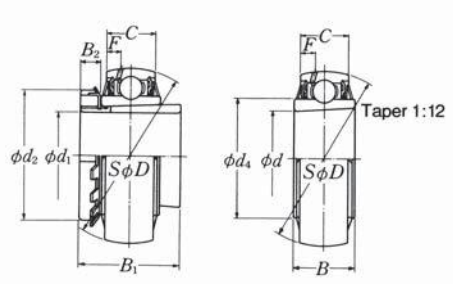

UK3···D1;H, HA, HE, HS UK3···D1

Shaft dia. mm inch	Bearing (1)(2) number	Nominal dimensions mm inch d	D	B	C	d_4	d_1	B_1	B_2	d_2	F	Basic load ratings N lbf dynamic C_r	static C_{or}	Mass kg lb
60	UK313D1;H2313X	65	140	49	39	88.2	60	65	14	85	10.1	92 500	60 000	3.08
2 3/16	UK313D1;HA2313						2 3/16							7.24
2 1/4	UK313D1;HE2313X	2.5591	5.5118	1.9291	1.5354	3.472	2 1/4	2.559	0.551	3.346	0.398	20 800	13 400	7.08
2 3/8	UK313D1;HS2313X						2 3/8							6.76
65	UK315D1;H2315X	75	160	55	43	101.3	65	73	15	98	11.0	113 000	77 000	4.75
2 7/16	UK315D1;HA2315	2.9528	6.2992	2.1654	1.6929	3.988	2 7/16	2.874	0.591	3.858	0.433	25 500	17 400	11.1
2 1/2	UK315D1;HE2315X						2 1/2							10.9
70	UK316D1;H2316X	80	170	58	45	107.9	70	78	17	105	11.4	123 000	86 500	5.75
2 11/16	UK316D1;HA2316	3.1496	6.6929	2.2835	1.7717	4.248	2 11/16	3.071	0.669	4.134	0.449	27 600	19 500	12.9
2 3/4	UK316D1;HE2316X						2 3/4							12.7
75	UK317D1;H2317X	85	180	60	47	114.4	75	82	18	110	12.0	133 000	97 000	6.72
2 15/16	UK317D1;HA2317X	3.3465	7.0866	2.3622	1.8504	4.504	2 15/16	3.228	0.709	4.331	0.472	29 800	21 800	14.9
3	UK317D1;HE2317X						3							14.6
80	UK318D1;H2318X	90	190	64	49	120.9	80	86	18	120	12.3	143 000	107 000	7.75
3 3/16	UK318D1;HA2318X	3.5433	7.4803	2.5197	1.9291	4.760	3 3/16	3.386	0.709	4.724	0.484	32 000	24 100	17.2
85	UK319D1;H2319X	95	200	67	51	127.5	85	90	19	125	12.8	153 000	119 000	9.02
3 1/4	UK319D1;HE2319X	3.7402	7.8740	2.6378	2.0079	5.020	3 1/4	3.543	0.748	4.921	0.504	34 500	26 600	20.4
90	UK320D1;H2320X	100	215	73	55	135.6	90	97	20	130	13.5	173 000	141 000	11.0
3 7/16	UK320D1;HA2320	3.9370	8.4646	2.8740	2.1654	5.339	3 7/16	3.819	0.787	5.118	0.531	39 000	31 500	24.7
3 1/2	UK320D1;HE2320X						3 1/2							25.1
100	UK322D1;H2322X	110	240	80	59	151.7	100	105	21	145	13.9	205 000	179 000	14.9
110	UK324D1;H2324	120	260	86	63	165.2	110	112	22	155	16.0	207 000	185 000	18.0
115	UK326D1;H2326	130	280	90	67	178.3	115	121	23	165	16.9	229 000	214 000	23.3
125	UK328D1;H2328	140	300	95	71	190.4	125	131	24	180	17.7	253 000	246 000	28.6

Notes (1) These numbers indicate relubricatable type. If maintenance free type is needed, please order without suffix "D1".
(2) Adapter number with suffix "X" means a narrow slot type adapter sleeve.
In this case the lock washer with the straight inner prong should be used.

Ball bearings
Adapter type

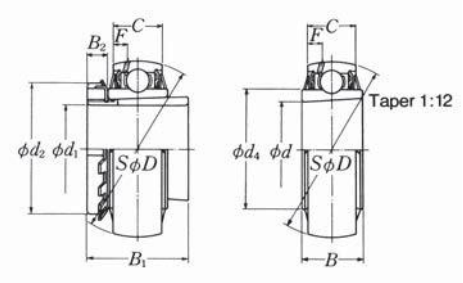

UKX···D1;H, HA, HE, HS UKX···D1

Shaft dia. mm / inch	Bearing (1)(2)(3) number	Nominal dimensions mm / inch d	D	B	C	d_4	d_1	B_1	B_2	d_2	F	Basic load ratings N / lbf dynamic C_r	static C_{or}	Mass kg / lb
20	UKX05D1;H2305X	25	62	26	19	40.8	20	35	8	38	4.6	19 500	11 300	0.38
3/4	UKX05D1;HE2305	0.9843	2.4409	1.0236	0.7480	1.606	3/4	1.378	0.315	1.496	0.181	4 400	2 540	0.85
25	UKX06D1;H2306X	30	72	29	20	46.8	25	38	8	45	4.6	25 700	15 300	0.53
7/8	UKX06D1;HS2306	1.1811	2.8346	1.1417	0.7874	1.843	7/8	1.496	0.315	1.772	0.181	5 750	3 450	1.24
1	UKX06D1;HE2306X						1							1.16
30	UKX07D1;H2307X	35	80	31	21	53	30	43	9	52	4.5	29 100	17 800	0.75
1 1/8	UKX07D1;HS2307	1.3780	3.1496	1.2205	0.8268	2.087	1 1/8	1.693	0.354	2.047	0.177	6 550	4 000	1.70
35	UKX08D1;H2308X	40	85	31	22	57.5	35	46	10	58	4.9	32 500	20 400	0.85
1 1/4	UKX08D1;HE2308X	1.5748	3.3465	1.2205	0.8661	2.264	1 1/4	1.811	0.394	2.283	0.193	7 350	4 600	2.01
1 3/8	UKX08D1;HS2308X						1 3/8							1.88
40	UKX09D1;H2309X	45	90	32	24	62.4	40	50	11	65	5.9	35 000	23 200	0.97
1 7/16	UKX09D1;HA2309						1 7/16							2.32
1 1/2	UKX09D1;HE2309X	1.7717	3.5433	1.2598	0.9449	2.457	1 1/2	1.969	0.433	2.559	0.232	7 900	5 200	2.24
1 5/8	UKX09D1;HS2309X						1 5/8							2.07
45	UKX10D1;H2310X	50	100	35	25	69	45	55	12	70	6.0	43 500	29 200	1.26
1 5/8	UKX10D1;HS2310						1 5/8							3.09
1 11/16	UKX10D1;HA2310	1.9685	3.9370	1.3780	0.9843	2.717	1 11/16	2.165	0.472	2.756	0.236	9 750	6 550	2.99
1 3/4	UKX10D1;HE2310X						1 3/4							2.88
50	UKX11D1;H2311X	55	110	38	27	77	50	59	12	75	6.2	52 500	36 000	1.62
1 7/8	UKX11D1;HS2311						1 7/8							3.84
1 15/16	UKX11D1;HA2311	2.1654	4.3307	1.4961	1.0630	3.031	1 15/16	2.323	0.472	2.953	0.244	11 800	8 150	3.72
2	UKX11D1;HE2311XY						2							3.58
55	UKX12D1;H2312X	60	120	40	32	82.5	55	62	13	80	8.7	57 500	40 000	2.07
2 1/8	UKX12D1;HS2312	2.3622	4.7244	1.5748	1.2598	3.248	2 1/8	2.441	0.512	3.150	0.343	12 900	9 000	4.66

Notes (1) These numbers indicate relubricatable type. If maintenance free type is needed, please order without suffix "D1".
(2) Adapter number with suffix "X" means a narrow slot type adapter sleeve.
In this case the lock washer with the straight inner prong should be used.
(3) For HE2311XY, screw thread pitch different from the standard is applied, because of the thin thread section of sleeve.
To distinguish it, a suffix "Y" is added.

Ball bearings
Adapter type

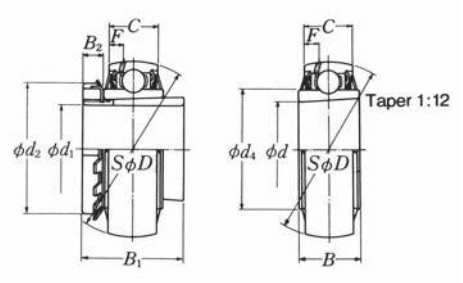

UKX···D1;H, HA, HE, HS UKX···D1

Shaft dia. mm inch	Bearing (1)(2) number	Nominal dimensions mm inch d	D	B	C	d_4	d_1	B_1	B_2	d_2	F	Basic load ratings N lbf dynamic C_r	static C_{or}	Mass kg lb
60	UKX13D1;H2313X	65	125	42	33	87	60	65	14	85	8.8	62 000	44 000	2.19
2 3/16	UKX13D1;HA2313						2 3/16							5.28
2 1/4	UKX13D1;HE2313X	2.5591	4.9213	1.6535	1.2992	3.425	2 1/4	2.559	0.551	3.346	0.346	14 000	9 900	5.12
2 3/8	UKX13D1;HS2313X						2 3/8							4.79
65	UKX15D1;H2315X	75	140	45	35	98.1	65	73	15	98	9.5	72 500	53 000	3.25
2 7/16	UKX15D1;HA2315	2.9528	5.5118	1.7717	1.3780	3.862	2 7/16	2.874	0.591	3.858	0.374	16 300	11 900	7.47
2 1/2	UKX15D1;HE2315X						2 1/2							7.27
70	UKX16D1;H2316X	80	150	46	36	106.4	70	78	17	105	10.1	83 500	64 000	3.87
2 11/16	UKX16D1;HA2316	3.1496	5.9055	1.8110	1.4173	4.189	2 11/16	3.071	0.669	4.134	0.398	18 700	14 300	8.79
2 3/4	UKX16D1;HE2316X						2 3/4							8.56
75	UKX17D1;H2317X	85	160	47	37	111.6	75	82	18	110	9.8	96 000	71 500	4.53
2 15/16	UKX17D1;HA2317X	3.3465	6.2992	1.8504	1.4567	4.394	2 15/16	3.228	0.709	4.331	0.386	21 600	16 100	10.6
3	UKX17D1;HE2317X						3							10.3
80	UKX18D1;H2318X	90	170	49	39	118.2	80	86	18	120	10.5	109 000	82 000	5.17
3 3/16	UKX18D1;HA2318X	3.5433	6.6929	1.9291	1.5354	4.654	3 3/16	3.386	0.709	4.724	0.413	24 500	18 400	11.2
90	UKX20D1;H2320X	100	190	57	44	131.3	90	97	20	130	11.3	133 000	105 000	7.39

Notes (1) These numbers indicate relubricatable type. If maintenance free type is needed, please order without suffix "D1".
(2) Adapter number with suffix "X" means a narrow slot type adapter sleeve.
In this case the lock washer with the straight inner prong should be used.

Ball bearings
Set screw type

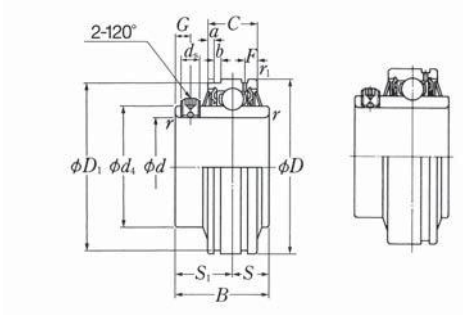

UCS···D1N

UCS···D1

Shaft dia. mm inch	Bearing (1) number	Nominal dimensions mm inch d	D	B	C	r min.	r_1 min.	S	S_1	G	d_s	d_4	D_1	a	b	F	Basic load ratings N lbf dynamic C_r	static C_{or}	Mass kg lb
12	UCS201LD1N	12	47	31	17	0.6	0.6	12.7	18.3	4.5	M5×0.8	29.6	44.6	3.1	1.5	4	12 800	6 650	0.21
1/2	UCS201-008LD1N	0.5000	1.8504	1.2205	0.6693	0.024	0.024	0.500	0.720	0.177	No.10-32UNNF	1.1654	1.756	0.122	0.059	0.157	2 890	1 500	0.46
15	UCS202LD1N	15	47	31	17	0.6	0.6	12.7	18.3	4.5	M5×0.8	29.6	44.6	3.1	1.5	4	12 800	6 650	0.20
9/16	UCS202-009LD1N	0.5625	1.8504	1.2205	0.6693	0.024	0.024	0.500	0.720	0.177	No.10-32UNNF	1.1654	1.756	0.122	0.059	0.157	2 890	1 500	0.44
5/8	UCS202-010LD1N	0.6250																	0.42
17	UCS203LD1N	17	47	31	17	0.6	0.6	12.7	18.3	4.5	M5×0.8	29.6	44.6	3.1	1.5	4	12 800	6 650	0.18
11/16	UCS203-011LD1N	0.6875	1.8504	1.2205	0.6693	0.024	0.024	0.500	0.720	0.177	No.10-32UNNF	1.1654	1.756	0.122	0.059	0.157	2 890	1 500	0.39
20	UCS204LD1N	20	47	31	17	1	0.6	12.7	18.3	4.5	M5×0.8	29.6	44.6	3.1	1.5	4	12 800	6 650	0.17
3/4	UCS204-012LD1N	0.7500	1.8504	1.2205	0.6693	0.039	0.024	0.500	0.720	0.177	No.10-32UNNF	1.1654	1.756	0.122	0.059	0.157	2 890	1 500	0.39
25	UCS205LD1N	25	52	34.1	17	1	0.6	14.3	19.8	5	M5×0.8	33.9	49.73	3.2	1.5	4.1	14 000	7 850	0.20
13/16	UCS205-013LD1N	0.8125																	0.53
7/8	UCS205-014LD1N	0.8750	2.0472	1.3425	0.6693	0.039	0.024	0.563	0.780	0.197	No.10-32UNNF	1.3346	1.958	0.126	0.059	0.161	3 150	1 770	0.51
15/16	UCS205-015LD1N	0.9375																	0.46
1	UCS205-100LD1N	1.0000																	0.44
30	UCS206LD1N	30	62	38.1	19	1	1	15.9	22.2	5	M6×0.75	40.8	59.61	3.2	2.05	4.2	19 500	11 300	0.34
1 1/16	UCS206-101LD1N	1.0625																	0.82
1 1/8	UCS206-102LD1N	1.1250	2.4409	1.5000	0.7480	0.039	0.039	0.626	0.874	0.197	1/4-28UNF	1.6063	2.347	0.126	0.081	0.165	4 400	2 540	0.77
1 3/16	UCS206-103LD1N	1.1875																	0.73
1 1/4	UCS206-104LD1N	1.2500																	0.66
35	UCS207LD1N	35	72	42.9	20	1.5	1.5	17.5	25.4	6	M6×0.75	46.8	68.81	3.3	2.05	5	25 700	15 300	0.48
1 1/4	UCS207-104LD1N	1.2500																	1.21
1 5/16	UCS207-105LD1N	1.3125	2.8346	1.6890	0.7874	0.059	0.059	0.689	1.000	0.236	1/4-28UNF	1.8425	2.709	0.130	0.081	0.197	5 750	3 450	1.15
1 3/8	UCS207-106LD1N	1.3750																	1.08
1 7/16	UCS207-107LD1N	1.4375																	1.01
40	UCS208LD1N	40	80	49.2	21	1.5	1.5	19	30.2	8	M8×1	53	76.81	3.4	2.05	5	29 100	17 800	0.65
1 1/2	UCS208-108LD1N	1.5000	3.1496	1.9370	0.8268	0.059	0.059	0.748	1.189	0.315	5/16-24UNF	2.0866	3.024	0.134	0.081	0.197	6 550	4 000	1.52
1 9/16	UCS208-109LD1N	1.5625																	1.46
45	UCS209LD1N	45	85	49.2	22	1.5	1.5	19	30.2	8	M8×1	57.5	81.81	3.5	2.05	5.1	32 500	20 400	0.70
1 5/8	UCS209-110LD1N	1.6250																	1.76
1 11/16	UCS209-111LD1N	1.6875	3.3465	1.9370	0.8661	0.059	0.059	0.748	1.189	0.315	5/16-24UNF	2.2638	3.221	0.138	0.081	0.201	7 350	4 600	1.68
1 3/4	UCS209-112LD1N	1.7500																	1.57

Note (1) These numbers indicate relubricatable type. If maintenance free type is needed, please order without suffix "D1".

Ball bearings
Set screw type

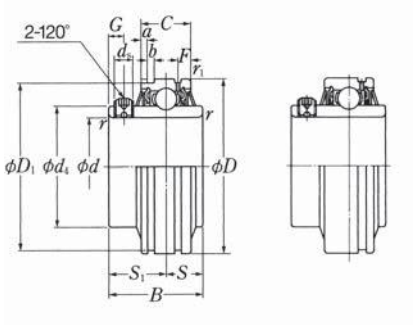

UCS···D1N

UCS···D1

Shaft dia. mm inch	Bearing (1) number	Nominal dimensions mm inch d	D	B	C	r min.	r_1 min.	S	S_1	G	d_s	d_4	D_1	a	b	F	Basic load ratings N lbf dynamic C_r	static C_{or}	Mass kg lb
50	UCS210LD1N	50	90	51.6	24	1.5	1.5	19	32.6	9	M8×1	62.4	86.79	3.7	2.85	5.6	35 000	23 200	0.78
1 13/16	UCS210-113LD1N	1.8125																	2.03
1 7/8	UCS210-114LD1N	1.8750	3.5433	2.0315	0.9449	0.059	0.059	0.748	1.283	0.354	5/16-24UNF	2.4567	3.417	0.146	0.112	0.220	7 900	5 200	1.92
1 15/16	UCS210-115LD1N	1.9375																	1.81
2	UCS210-200LD1N	2.0000																	1.69
55	UCS211LD1N	55	100	55.6	25	2	2	22.2	33.4	9	M8×1	69	96.80	4.4	2.85	5.9	43 500	29 200	1.06
2	UCS211-200LD1N	2.0000																	2.71
2 1/16	UCS211-201LD1N	2.0625	3.9370	2.1890	0.9843	0.079	0.079	0.874	1.315	0.354	5/16-24UNF	2.7165	3.811	0.173	0.112	0.232	9 750	6 550	2.60
2 1/8	UCS211-202LD1N	2.1250																	2.46
2 3/16	UCS211-203LD1N	2.1875																	2.34
60	UCS212LD1N	60	110	65.1	27	2	2	25.4	39.7	10	M10×1.25	77	106.81	4.4	2.85	6	52 500	36 000	1.48
2 1/4	UCS212-204LD1N	2.2500																	3.78
2 5/16	UCS212-205LD1N	2.3125	4.3307	2.5630	1.0630	0.079	0.079	1.000	1.563	0.394	3/8-24UNF	3.0315	4.205	0.173	0.112	0.236	11 800	8 150	3.62
2 3/8	UCS212-206LD1N	2.3750																	3.45
2 7/16	UCS212-207LD1N	2.4375																	3.29
65	UCS213D1	65	120	65.1	32	2	2	25.4	39.7	10	M10×1.25	82.5	—	—	—	6.8	57 500	40 000	1.88
2 1/2	UCS213-208D1	2.5000	4.7244	2.5630	1.2598	0.079	0.079	1.000	1.563	0.394	3/8-24UNF	3.2480	—	—	—	0.268	12 900	9 000	4.41
2 9/16	UCS213-209D1	2.5625																	4.24
70	UCS214D1	70	125	74.6	33	2	2	30.2	44.4	12	M10×1.25	87	—	—	—	7	62 000	44 000	2.17
75	UCS215D1	75	130	77.8	34	2	2	33.3	44.5	12	M10×1.25	93	—	—	—	7	66 000	49 500	2.43
80	UCS216D1	80	140	82.6	35	2.5	2.5	33.3	49.3	12	M10×1.25	98.1	—	—	—	7.5	72 500	53 000	2.89
85	UCS217D1	85	150	85.7	36	2.5	2.5	34.1	51.6	12	M12×1.5	106.4	—	—	—	7.5	83 500	64 000	3.47
90	UCS218D1	90	160	96	37	2.5	2.5	39.7	56.3	12	M12×1.5	111.6	—	—	—	7	96 000	71 500	4.24

Note (1) These numbers indicate relubricatable type. If maintenance free type is needed, please order without suffix "D1".

Ball bearings
Set screw type

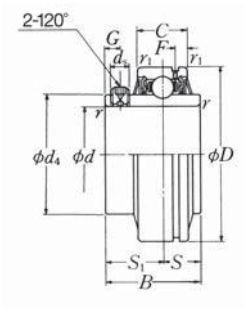

Shaft dia. mm inch	Bearing (1) number	Nominal dimensions mm inch d	D	B	C	r min.	r_1 min.	S	S_1	G	d_s	Nominal dimensions mm inch d_4	F	Basic load ratings N lbf dynamic C_r	static C_{or}	Mass kg lb
25	UCS305D1	25	62	38	20	1.5	0.6	15	23	6	M6×0.75	36.8	4.3	21 200	10 900	0.37
13/16	UCS305-013D1	0.8125														0.94
7/8	UCS305-014D1	0.8750	2.4409	1.4961	0.7874	0.059	0.024	0.591	0.906	0.236	1/4-28UNF	1.4488	0.169	4 750	2 460	0.90
15/16	UCS305-015D1	0.9375														0.83
1	UCS305-100D1	1.0000														0.81
30	UCS306D1	30	72	43	23	1.5	1	17	26	6	M6×0.75	44.9	5.1	26 700	15 000	0.58
1 1/16	UCS306-101D1	1.0625														1.39
1 1/8	UCS306-102D1	1.1250	2.8346	1.6929	0.9055	0.059	0.039	0.669	1.024	0.236	1/4-28UNF	1.7677	0.201	6 000	3 400	1.33
1 3/16	UCS306-103D1	1.1875														1.28
35	UCS307D1	35	80	48	25	2	1	19	29	8	M8×1	49.4	5.3	33 500	19 100	0.74
1 1/4	UCS307-104D1	1.2500														1.77
1 5/16	UCS307-105D1	1.3125	3.1496	1.8898	0.9843	0.079	0.039	0.748	1.142	0.315	5/16-24UNF	1.9449	0.209	7 500	4 300	1.70
1 3/8	UCS307-106D1	1.3750														1.64
1 7/16	UCS307-107D1	1.4375														1.57
40	UCS308D1	40	90	52	27	2	1	19	33	10	M10×1.25	56	5.6	40 500	24 000	1.00
1 1/2	UCS308-108D1	1.5000	3.5433	2.0472	1.0630	0.079	0.039	0.748	1.299	0.394	3/8-24UNF	2.2047	0.220	9 150	5 400	2.32
1 9/16	UCS308-109D1	1.5625														2.23
45	UCS309D1	45	100	57	29	2	1	22	35	10	M10×1.25	63.5	5.8	53 000	32 000	1.33
1 5/8	UCS309-110D1	1.6250														3.17
1 11/16	UCS309-111D1	1.6875	3.9370	2.2441	1.1417	0.079	0.039	0.866	1.378	0.394	3/8-24UNF	2.5000	0.228	11 900	7 200	3.09
1 3/4	UCS309-112D1	1.7500														2.98
50	UCS310D1	50	110	61	32	2.5	1.5	22	39	12	M12×1.5	70.6	6.3	62 000	38 500	1.72
1 13/16	UCS310-113D1	1.8125														4.10
1 7/8	UCS310-114D1	1.8750	4.3307	2.4016	1.2598	0.098	0.059	0.866	1.535	0.472	1/2-20UNF	2.7795	0.248	13 900	8 600	3.99
1 15/16	UCS310-115D1	1.9375														3.85
55	UCS311D1	55	120	66	34	2.5	1.5	25	41	12	M12×1.5	76.6	6.5	71 500	45 000	2.15
2	UCS311-200D1	2.0000														5.14
2 1/16	UCS311-201D1	2.0625	4.7244	2.5984	1.3386	0.098	0.059	0.984	1.614	0.472	1/2-20UNF	3.0157	0.256	16 100	10 100	4.99
2 1/8	UCS311-202D1	2.1250														4.85
2 3/16	UCS311-203D1	2.1875														4.68

Note (1) These numbers indicate relubricatable type. If maintenance free type is needed, please order without suffix "D1".

Ball bearings
Set screw type

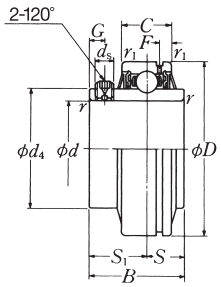

Shaft dia. mm inch	Bearing (1) number	Nominal dimensions mm inch d	D	B	C	r min.	r_1 min.	S	S_1	G	d_s	Nominal dimensions mm inch d_4	F	Basic load ratings N lbf dynamic C_r	static C_{or}	Mass kg lb
60	UCS312D1	60	130	71	36	2.5	1.5	26	45	12	M12×1.5	82.7	6.7	82 000	52 000	2.70
2 1/4	UCS312-204D1	2.2500														6.27
2 5/16	UCS312-205D1	2.3125	5.1181	2.7953	1.4173	0.098	0.059	1.024	1.772	0.472	1/2-20UNF	3.2559	0.264	18 400	11 700	6.10
2 3/8	UCS312-206D1	2.3750														5.89
2 7/16	UCS312-207D1	2.4375														5.72
65	UCS313D1	65	140	75	39	2.5	2	30	45	12	M12×1.5	88.2	7.5	92 500	60 000	3.37
2 1/2	UCS313-208D1	2.5000	5.5118	2.9528	1.5354	0.098	0.079	1.181	1.772	0.472	1/2-20UNF	3.4724	0.295	20 800	13 400	7.63
2 9/16	UCS313-209D1	2.5625														7.41
70	UCS314D1	70	150	78	41	2.5	2	33	45	12	M12×1.5	94.8	7.5	104 000	68 000	4.03
2 5/8	UCS314-210D1	2.6250														9.37
2 11/16	UCS314-211D1	2.6875	5.9055	3.0709	1.6142	0.098	0.079	1.299	1.772	0.472	1/2-20UNF	3.7323	0.295	23 400	15 300	9.13
2 3/4	UCS314-212D1	2.7500														8.91
75	UCS315D1	75	160	82	43	2.5	2	32	50	14	M14×1.5	101.3	7.7	113 000	77 000	4.88
2 13/16	UCS315-213D1	2.8125														11.4
2 7/8	UCS315-214D1	2.8750	6.2992	3.2283	1.6929	0.098	0.079	1.260	1.969	0.551	9/16-18UNF	3.9882	0.303	25 500	17 400	11.1
2 15/16	UCS315-215D1	2.9375														10.9
3	UCS315-300D1	3.0000														10.6
80	UCS316D1	80	170	86	45	2.5	2	34	52	14	M14×1.5	107.9	7.8	123 000	86 500	5.74
3 1/16	UCS316-301D1	3.0625														13.0
3 1/8	UCS316-302D1	3.1250	6.6929	3.3858	1.7717	0.098	0.079	1.339	2.047	0.551	9/16-18UNF	4.2480	0.307	27 600	19 500	12.7
3 3/16	UCS316-303D1	3.1875														12.5
85	UCS317D1	85	180	96	47	3	2.5	40	56	16	M16×1.5	114.4	8.2	133 000	97 000	6.88
3 1/4	UCS317-304D1	3.2500														15.7
3 5/16	UCS317-305D1	3.3125	7.0866	3.7795	1.8504	0.118	0.098	1.575	2.205	0.630	5/8-18UNF	4.5039	0.323	29 800	21 800	15.4
3 7/16	UCS317-307D1	3.4375														14.7
90	UCS318D1	90	190	96	49	3	2.5	40	56	16	M16×1.5	120.9	8.5	143 000	107 000	7.80
3 7/16	UCS318-307D1	3.4375	7.4803	3.7795	1.9291	0.118	0.098	1.575	2.205	0.630	5/8-18UNF	4.7598	0.335	32 000	24 100	17.8
3 1/2	UCS318-308D1	3.5000														17.4

Note (1) These numbers indicate relubricatable type. If maintenance free type is needed, please order without suffix "D1".

Ball bearings
Set screw type

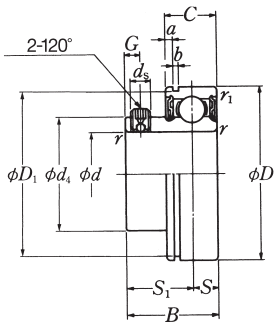

Shaft dia. mm / inch	Bearing number	Nominal dimensions mm / inch d	D	B	C	r min.	r_1 min.	S	S_1	G	d_s	d_4	D_1	a	b	Basic load ratings N / lbf dynamic C_r	static C_{or}	Mass kg / lb
12	ASS201N	12	40	22	12	0.6	0.6	6	16	4.2	M5×0.8	24.3	38.1	1.98	1.5	9 600	4 600	0.12
1/2	ASS201-008N	0.5000	1.5748	0.8661	0.4724	0.024	0.024	0.236	0.630	0.165	No.10-32UNF	0.957	1.500	0.078	0.059	2 160	1 030	0.24
15	ASS202N	15	40	22	12	0.6	0.6	6	16	4.2	M5×0.8	24.3	38.1	1.98	1.5	9 600	4 600	0.11
9/16	ASS202-009N	0.5625	1.5748	0.8661	0.4724	0.024	0.024	0.236	0.630	0.165	No.10-32UNF	0.957	1.500	0.078	0.059	2 160	1 030	0.23
5/8	ASS202-010N	0.6250																0.22
17	ASS203N	17	40	22	12	0.6	0.6	6	16	4.2	M5×0.8	24.3	38.1	1.98	1.5	9 600	4 600	0.10
11/16	ASS203-011N	0.6875	1.5748	0.8661	0.4724	0.024	0.024	0.236	0.630	0.165	No.10-32UNF	0.957	1.500	0.078	0.059	2 160	1 030	0.20
20	ASS204N	20	47	25	14	1	0.6	7	18	4.2	M5×0.8	29.6	44.6	2.38	1.5	12 800	6 650	0.17
3/4	ASS204-012N	0.7500	1.8504	0.9843	0.5512	0.039	0.024	0.276	0.709	0.165	No.10-32UNF	1.165	1.756	0.094	0.059	2 890	1 500	0.33
25	ASS205N	25	52	27	15	1	0.6	7.5	19.5	5	M5×0.8	33.9	49.73	2.38	1.5	14 000	7 850	0.20
13/16	ASS205-013N	0.8125	2.0472	1.0630	0.5906	0.039	0.024	0.295	0.768	0.197	No.10-32UNF	1.335	1.958	0.094	0.059	3 150	1 770	0.46
7/8	ASS205-014N	0.8750																0.44
15/16	ASS205-015N	0.9375																0.42
1	ASS205-100N	1.0000																0.39
30	ASS206N	30	62	29	16	1	0.6	8	21	5	M6×0.75	40.8	59.61	3.18	2.05	19 500	11 300	0.31
1 1/16	ASS206-101N	1.0625	2.4409	1.1417	0.6299	0.039	0.024	0.315	0.827	0.197	1/4-28UNF	1.606	2.347	0.125	0.081	4 400	2 540	0.67
1 1/8	ASS206-102N	1.1250																0.65
1 3/16	ASS206-103N	1.1875																0.63
1 1/4	ASS206-104N	1.2500																0.61
35	ASS207N	35	72	34	17	1.5	0.6	8.5	25.5	6	M6×0.75	46.8	68.81	3.18	2.05	25 700	15 300	0.49
1 1/4	ASS207-104N	1.2500	2.8346	1.3386	0.6693	0.059	0.024	0.335	1.004	0.236	1/4-28UNF	1.843	2.709	0.125	0.081	5 750	3 450	1.18
1 5/16	ASS207-105N	1.3125																1.05
1 3/8	ASS207-106N	1.3750																0.93
1 7/16	ASS207-107N	1.4375																0.81
40	ASS208N	40	80	38	18	1.5	0.6	9	29	8	M8×1	53	76.81	3.18	2.05	29 100	17 800	0.50
1 1/2	ASS208-108N	1.5000	3.1496	1.4961	0.7087	0.059	0.024	0.354	1.142	0.315	5/16-24UNF	2.087	3.024	0.125	0.081	6 550	4 000	1.15
1 9/16	ASS208-109N	1.5625																1.06

Ball bearings
Eccentric locking collar type

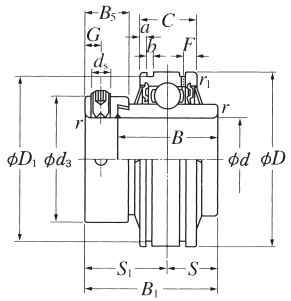

UELS···D1N

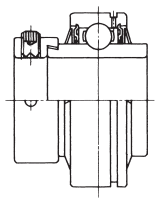

UELS···D1

Shaft dia. mm inch	Bearing (1) number	Nominal dimensions mm inch d	D	B_1	B	C	r min.	r_1 min.	S	S_1	G	d_s	d_3	B_5	D_1	a	b	F	Basic load ratings N lbf dynamic C_r	static C_{or}	Mass kg lb
20	UELS204LD1NW3	20	47	43.7	34.2	17	1	0.6	17.1	26.6	4.8	M6×0.75	33	13.5	44.6	3.1	1.5	4	12 800	6 650	0.23
3/4	UELS204-012LD1NW3	0.7500	1.8504	1.720	1.3465	0.6693	0.039	0.024	0.673	1.047	0.189	1/4-28UNF	1.299	0.531	1.756	0.122	0.059	0.157	2 890	1 500	0.45
25	UELS205LD1NW3	25	52	44.4	34.9	17	1	0.6	17.45	26.9	4.8	M6×0.75	38	13.5	49.73	3.2	1.5	4.1	14 000	7 850	0.27
13/16	UELS205-013LD1NW3	0.8125																			0.61
7/8	UELS205-014LD1NW3	0.8750	2.0472	1.748	1.3740	0.6693	0.039	0.024	0.687	1.059	0.189	1/4-28UNF	1.496	0.531	1.958	0.126	0.059	0.161	3 150	1 770	0.58
15/16	UELS205-015LD1NW3	0.9375																			0.55
1	UELS205-100LD1NW3	1.0000																			0.51
30	UELS206LD1NW3	30	62	48.4	36.5	19	1	1	18.25	30.1	6	M8×1	44.5	15.9	59.61	3.2	2.05	4.2	19 500	11 300	0.41
1 1/16	UELS206-101LD1NW3	1.0625																			0.94
1 1/8	UELS206-102LD1NW3	1.1250	2.4409	1.906	1.4370	0.7480	0.039	0.039	0.719	1.185	0.236	5/16-24UNF	1.752	0.626	2.347	0.126	0.081	0.165	4 400	2 540	0.89
1 3/16	UELS206-103LD1NW3	1.1875																			0.84
1 1/4	UELS206-104LD1NW3	1.2500																			0.80
35	UELS207LD1NW3	35	72	51.1	37.6	20	1.5	1.5	18.8	32.3	6.8	M10×1.25	55.5	17.5	68.81	3.3	2.05	5	25 700	15 300	0.60
1 1/4	UELS207-104LD1NW3	1.2500																			1.45
1 5/16	UELS207-105LD1NW3	1.3125	2.8346	2.012	1.4803	0.7874	0.059	0.059	0.740	1.272	0.268	3/8-24UNF	2.185	0.689	2.709	0.130	0.081	0.197	5 750	3 450	1.40
1 3/8	UELS207-106LD1NW3	1.3750																			1.35
1 7/16	UELS207-107LD1NW3	1.4375																			1.28
40	UELS208LD1NW3	40	80	56.3	42.8	21	1.5	1.5	21.4	34.9	6.8	M10×1.25	60	18.3	76.81	3.4	2.05	5	29 100	17 800	0.79
1 1/2	UELS208-108LD1NW3	1.5000	3.1496	2.217	1.6850	0.8268	0.059	0.059	0.843	1.374	0.268	3/8-24UNF	2.362	0.720	3.024	0.134	0.081	0.197	6 550	4 000	1.90
1 9/16	UELS208-109LD1NW3	1.5625																			1.82
45	UELS209LD1NW3	45	85	56.3	42.8	22	1.5	1.5	21.4	34.9	6.8	M10×1.25	63.5	18.3	81.81	3.5	2.05	5.1	32 500	20 400	0.85
1 5/8	UELS209-110LD1NW3	1.6250																			2.05
1 11/16	UELS209-111LD1NW3	1.6875	3.3465	2.217	1.6850	0.8661	0.059	0.059	0.843	1.374	0.268	3/8-24UNF	2.500	0.720	3.221	0.138	0.081	0.201	7 350	4 600	1.97
1 3/4	UELS209-112LD1NW3	1.7500																			1.88
50	UCS210LD1NW3	50	90	62.7	49.2	24	1.5	1.5	24.6	38.1	6.8	M10×1.25	69.5	18.3	86.79	3.7	2.85	5.6	35 000	23 200	0.98
1 13/16	UCS210-113LD1NW3	1.8125																			2.46
1 7/8	UCS210-114LD1NW3	1.8750	3.5433	2.469	1.9370	0.9449	0.059	0.059	0.969	1.500	0.268	3/8-24UNF	2.736	0.720	3.417	0.146	0.112	0.220	7 900	5 200	2.36
1 15/16	UCS210-115LD1NW3	1.9375																			2.25
2	UCS210-200LD1NW3	2.0000																			2.09

Note (1) These numbers indicate relubricatable type. If maintenance free type is needed, please order without suffix "D1".

Ball bearings
Eccentric locking collar type

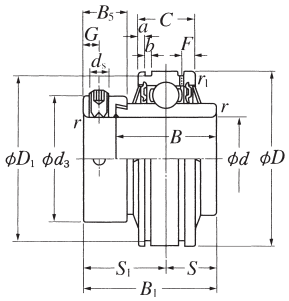

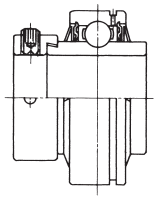

UELS···D1N

UELS···D1

Shaft dia. mm inch	Bearing (1) number	Nominal dimensions mm inch d	D	B_1	B	C	r min.	r_1 min.	S	S_1	G	d_s	d_3	B_5	D_1	a	b	F	Basic load ratings N lbf dynamic C_r	static C_{or}	Mass kg lb
55	UELS211LD1NW3	55	100	71.4	55.5	25	2	2	27.75	43.6	8	M10×1.25	76	20.7	96.80	4.4	2.85	5.9	43 500	29 200	1.32
2	UELS211-200LD1NW3	2.0000																			3.28
2 1/16	UELS211-201LD1NW3	2.0625	3.9370	2.811	2.1850	0.9843	0.079	0.079	1.093	1.717	0.315	3/8-24UNF	2.992	0.815	3.811	0.173	0.112	0.232	9 750	6 550	3.12
2 1/8	UELS211-202LD1NW3	2.1250																			3.02
2 3/16	UELS211-203LD1NW3	2.1875																			2.90
60	UELS212LD1NW3	60	110	77.8	61.9	27	2	2	30.95	46.8	8	M10×1.25	84	22.3	106.81	4.4	2.85	6	52 500	36 000	1.93
2 1/4	UELS212-204LD1W3	2.2500																			4.50
2 5/16	UELS212-205LD1W3	2.3125	4.3307	3.063	2.4370	1.0630	0.079	0.079	1.219	1.843	0.315	3/8-24UNF	3.307	0.878	4.205	0.173	0.112	0.236	11 800	8 150	4.34
2 3/8	UELS212-206LD1W3	2.3750																			4.17
2 7/16	UELS212-207LD1W3	2.4375																			4.00

Note (1) These numbers indicate relubricatable type. If maintenance free type is needed, please order without suffix "D1".

Ball bearings
Eccentric locking collar type

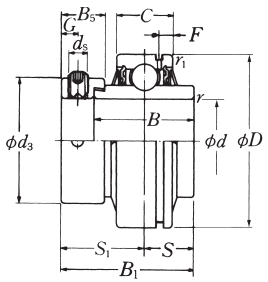

Shaft dia. mm inch	Bearing (1) number	Nominal dimensions mm inch d	D	B_1	B	C	r min.	r_1 min.	S	S_1	G	d_s	d_3	B_5	F	Basic load ratings N lbf dynamic C_r	static C_{or}	Mass kg lb
25	UELS305D1W3	25	62	46.8	34.9	20	1.5	0.6	16.7	30.1	6	M8×1	42.8	15.9	4.3	21 200	10 900	0.45
13/16	UELS305-013D1W3	0.8125																1.13
7/8	UELS305-014D1W3	0.8750	2.4409	1.843	1.3740	0.7874	0.059	0.024	0.657	1.185	0.236	5/16-24UNF	1.685	0.626	0.169	4 750	2 460	1.09
15/16	UELS305-015D1W3	0.9375																1.05
1	UELS305-100D1W3	1.0000																1.00
30	UELS306D1W3	30	72	50	36.5	23	1.5	1	17.5	32.5	6.7	M8×1	50	17.5	5.1	26 700	15 000	0.71
1 1/16	UELS306-101D1W3	1.0625																1.62
1 1/8	UELS306-102D1W3	1.1250	2.8346	1.969	1.4370	0.9055	0.059	0.039	0.689	1.280	0.264	5/16-24UNF	1.969	0.689	0.201	6 000	3 400	1.56
1 3/16	UELS306-103D1W3	1.1875																1.50
35	UELS307D1W3	35	80	51.6	38.1	25	2	1	18.3	33.3	6.7	M8×1	55	17.5	5.3	33 500	19 100	0.83
1 1/4	UELS307-104D1W3	1.2500																1.99
1 5/16	UELS307-105D1W3	1.3125	3.1496	2.031	1.5000	0.9843	0.079	0.039	0.720	1.311	0.264	5/16-24UNF	2.165	0.689	0.209	7 500	4 300	1.91
1 3/8	UELS307-106D1W3	1.3750																1.84
1 7/16	UELS307-107D1W3	1.4375																1.76
40	UELS308D1W3	40	90	57.1	41.3	27	2	1	19.8	37.3	8	M10×1.25	63.5	20.6	5.6	40 500	24 000	1.12
1 1/2	UELS308-108D1W3	1.5000	3.5433	2.248	1.6260	1.0630	0.079	0.039	0.780	1.469	0.315	3/8-24UNF	2.500	0.811	0.220	9 150	5 400	2.67
1 9/16	UELS308-109D1W3	1.5625																2.58
45	UELS309D1W3	45	100	58.7	42.9	29	2	1	19.8	38.9	8	M10×1.25	70	20.6	5.8	53 000	32 000	1.50
1 5/8	UELS309-110D1W3	1.6250																3.26
1 11/16	UELS309-111D1W3	1.6875	3.9370	2.311	1.6890	1.1417	0.079	0.039	0.780	1.531	0.315	3/8-24UNF	2.756	0.811	0.228	11 900	7 200	3.37
1 3/4	UELS309-112D1W3	1.7500																3.26
50	UCS210D1W3	50	110	66.6	49.2	32	2.5	1.5	24.6	42	8.7	M10×1.25	76.2	22.2	6.3	62 000	38 500	1.93
1 13/16	UCS210-113D1W3	1.8125																4.55
1 7/8	UCS210-114D1W3	1.8750	4.3307	2.622	1.9370	1.2598	0.098	0.059	0.969	1.654	0.343	3/8-24UNF	3.000	0.874	0.248	13 900	8 600	4.44
1 15/16	UCS210-115D1W3	1.9375																4.30
55	UELS311D1W3	55	120	73	55.6	34	2.5	1.5	27.8	45.2	8.7	M10×1.25	83	22.2	6.5	71 500	45 000	2.42
2	UELS311-200D1W3	2.0000																5.76
2 1/16	UELS311-201D1W3	2.0625	4.7244	2.874	2.1890	1.3386	0.098	0.059	1.094	1.780	0.343	3/8-24UNF	3.268	0.874	0.256	16 100	10 100	5.57
2 1/8	UELS311-202D1W3	2.1250																5.43
2 3/16	UELS311-203D1W3	2.1875																5.26

Note (1) These numbers indicate relubricatable type. If maintenance free type is needed, please order without suffix "D1".

Ball bearings
Eccentric locking collar type

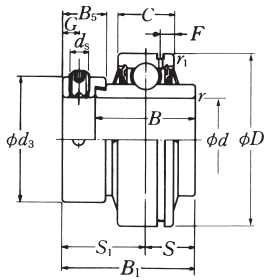

Shaft dia. mm / inch	Bearing (1) number	Nominal dimensions mm inch d	D	B_1	B	C	r min.	r_1 min.	S	S_1	G	d_s	d_3	B_5	F	Basic load ratings N lbf dynamic C_r	static C_{or}	Mass kg lb
60	UELS312D1W3	60	130	79.4	61.9	36	2.5	1.5	30.95	48.45	8.7	M10×1.25	89	23.9	6.7	82 000	52 000	3.04
2 1/4	UELS312-204D1W3	2.2500																7.01
2 5/16	UELS312-205D1W3	2.3125	5.1181	3.126	2.4370	1.4173	0.098	0.059	1.219	1.907	0.343	3/8-24UNF	3.504	0.941	0.264	18 400	11 700	6.86
2 3/8	UELS312-206D1W3	2.3750																6.69
2 7/16	UELS312-207D1W3	2.4375																6.40
65	UELS313D1W3	65	140	85.7	65.1	39	2.5	2	32.55	53.15	10.3	M12×1.5	97	27	7.5	92 500	60 000	3.79
2 1/2	UELS313-208D1W3	2.5000	5.5118	3.374	2.5630	1.5354	0.098	0.079	1.281	2.093	0.406	1/2-20UNF	3.819	1.063	0.295	20 800	13 400	8.76
2 9/16	UELS313-209D1W3	2.5625																8.55
70	UELS314D1W3	70	150	92.1	68.3	41	2.5	2	34.15	57.95	10.3	M12×1.5	102	30.2	7.5	104 000	68 000	4.54
2 5/8	UELS314-210D1W3	2.6250																10.7
2 11/16	UELS314-211D1W3	2.6875	5.9055	3.626	2.6890	1.6142	0.098	0.079	1.344	2.281	0.406	1/2-20UNF	4.016	1.189	0.295	23 400	15 300	10.5
2 3/4	UELS314-212D1W3	2.7500																10.2
75	UELS315D1W3	75	160	100	74.6	43	2.5	2	37.3	62.7	12.7	M16×1.5	113	31.8	7.7	113 000	77 000	5.50
2 13/16	UELS315-213D1W3	2.8125																13.5
2 7/8	UELS315-214D1W3	2.8750	6.2992	3.937	2.9370	1.6929	0.098	0.079	1.469	2.469	0.500	5/8-18UNF	4.449	1.252	0.303	25 500	17 400	13.2
2 15/16	UELS315-215D1W3	2.9375																13.0
3	UELS315-300D1W3	3.0000																12.9
80	UELS316D1W3	80	170	106.4	81	45	2.5	2	40.5	65.9	12.7	M16×1.5	119	31.8	7.8	123 000	86 500	6.89
3 1/16	UELS316-301D1W3	3.0625																15.3
3 1/8	UELS316-302D1W3	3.1250	6.6929	4.189	3.1890	1.7717	0.098	0.079	1.594	2.594	0.500	5/8-18UNF	4.685	1.252	0.307	27 600	19 500	15.0
3 3/16	UELS316-303D1W3	3.1875																15.3
85	UELS317D1W3	85	180	109.5	84.1	47	3	2.5	42.05	67.45	12.7	M16×1.5	127	31.8	8.2	133 000	97 000	8.21
3 1/4	UELS317-304D1W3	3.2500																18.2
3 5/16	UELS317-305D1W3	3.3125	7.0866	4.311	3.3110	1.8504	0.118	0.098	1.656	2.656	0.500	5/8-18UNF	5.000	1.252	0.323	29 800	21 800	17.9
3 7/16	UELS317-307D1W3	3.4375																17.2
90	UELS318D1W3	90	190	115.9	87.3	49	3	2.5	43.65	72.25	14.3	M20×1.5	133	36.5	8.5	143 000	107 000	9.34
3 7/16	UELS318-307D1W3	3.4375	7.4803	4.563	3.4370	1.9291	0.118	0.098	1.719	2.844	0.563	3/4-16UNF	5.236	1.437	0.335	32 000	24 100	21.2
3 1/2	UELS318-308D1W3	3.5000																20.7

Note (1) These numbers indicate relubricatable type. If maintenance free type is needed, please order without suffix "D1".

Ball bearings
Eccentric locking collar type

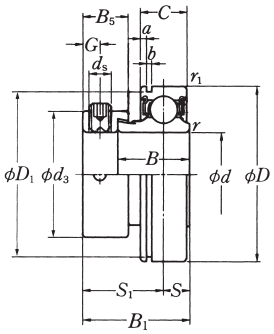

Shaft dia. mm inch	Bearing number	Nominal dimensions mm inch d	D	B_1	B	C	r min.	r_1 min.	S	S_1	G	d_s	d_3	D_1	a	b	B_5	Basic load ratings N lbf dynamic C_r	static C_{or}	Mass kg lb
12	AELS201NW3	12	40	28.6	19	12	0.6	0.6	6.5	22.1	4.8	M6×0.75	29	38.1	1.98	1.5	13.6	9 600	4 600	0.12
1/2	AELS201-008NW3	0.5000	1.5748	1.126	0.7480	0.4724	0.024	0.024	0.256	0.870	0.189	1/4-28UNF	1.142	1.500	0.078	0.059	0.535	2 160	1 030	0.26
15	AELS202NW3	15	40	28.6	19	12	0.6	0.6	6.5	22.1	4.8	M6×0.75	29	38.1	1.98	1.5	13.6	9 600	4 600	0.11
9/16	AELS202-009NW3	0.5625	1.5748	1.126	0.7480	0.4724	0.024	0.024	0.256	0.870	0.189	1/4-28UNF	1.142	1.500	0.078	0.059	0.535	2 160	1 030	0.26
5/8	AELS202-010NW3	0.6250																		0.24
17	AELS203NW3	17	40	28.6	19	12	0.6	0.6	6.5	22.1	4.8	M6×0.75	29	38.1	1.98	1.5	13.6	9 600	4 600	0.10
11/16	AELS203-011NW3	0.6875	1.5748	1.126	0.7480	0.4724	0.024	0.024	0.256	0.870	0.189	1/4-28UNF	1.142	1.500	0.078	0.059	0.535	2 160	1 030	0.23
20	AELS204NW3	20	47	31	21.5	14	1	0.6	7.5	23.5	4.8	M6×0.75	33	44.6	2.38	1.5	13.5	12 800	6 650	0.17
3/4	AELS204-012NW3	0.7500	1.8504	1.220	0.8465	0.5512	0.039	0.024	0.295	0.925	0.189	1/4-28UNF	1.299	1.756	0.094	0.059	0.531	2 890	1 500	0.35
25	AELS205NW3	25	52	31	21.5	15	1	0.6	7.5	23.5	4.8	M6×0.75	38	49.73	2.38	1.5	13.5	14 000	7 850	0.20
13/16	AELS205-013NW3	0.8125	2.0472	1.220	0.8465	0.5906	0.039	0.024	0.295	0.925	0.189	1/4-28UNF	1.496	1.958	0.094	0.059	0.531	3 150	1 770	0.51
7/8	AELS205-014NW3	0.8750																		0.48
15/16	AELS205-015NW3	0.9375																		0.45
1	AELS205-100NW3	1.0000																		0.42
30	AELS206NW3	30	62	35.7	23.8	16	1	0.6	9	26.7	6	M8×1	44.5	59.61	3.18	2.05	15.9	19 500	11 300	0.31
1 1/16	AELS206-101NW3	1.0625	2.4409	1.406	0.9370	0.6299	0.039	0.024	0.354	1.051	0.236	5/16-24UNF	1.752	2.347	0.125	0.081	0.626	4 400	2 540	0.74
1 1/8	AELS206-102NW3	1.1250																		0.73
1 3/16	AELS206-103NW3	1.1875																		0.66
1 1/4	AELS206-104NW3	1.2500																		0.61
35	AELS207NW3	35	72	38.9	25.4	17	1.5	0.6	9.5	29.4	6.8	M10×1.25	55.5	68.81	3.18	2.05	17.5	25 700	15 300	0.49
1 1/4	AELS207-104NW3	1.2500	2.8346	1.531	1.0000	0.6693	0.059	0.024	0.374	1.157	0.268	3/8-24UNF	2.185	2.709	0.125	0.081	0.689	5 750	3 450	1.15
1 5/16	AELS207-105NW3	1.3125																		1.10
1 3/8	AELS207-106NW3	1.3750																		1.04
1 7/16	AELS207-107NW3	1.4375																		0.98
40	AELS208NW3	40	80	43.7	30.2	18	1.5	0.6	11	32.7	6.8	M10×1.25	60	76.81	3.18	2.05	18.3	29 100	17 800	0.66
1 1/2	AELS208-108NW3	1.5000	3.1496	1.720	1.1890	0.7087	0.059	0.024	0.433	1.287	0.268	3/8-24UNF	2.362	3.024	0.125	0.081	0.720	6 550	4 000	1.41
1 9/16	AELS208-109NW3	1.5625																		1.34

Ball bearings
Eccentric locking collar type

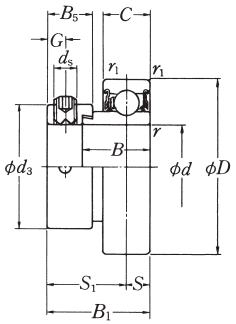

Shaft dia. mm / inch	Bearing number	Nominal dimensions mm inch d	D	B_1	B	C	r min.	r_1 min.	S	S_1	G	d_s	Nominal dimensions mm inch d_3	B_5	Basic load ratings N lbf dynamic C_r	static C_{or}	Mass kg lb
12	JELS201W3	12	40	28.6	19	13	0.6	0.4	6.5	22.1	4.8	M6×0.75	29	13.6	9 600	4 600	0.13
1/2	JELS201-008W3	0.5000	1.5748	1.126	0.7480	0.5118	0.024	0.016	0.256	0.870	0.189	1/4-28UNF	1.142	0.535	2 160	1 030	0.26
15	JELS202W3	15	40	28.6	19	13	0.6	0.4	6.5	22.1	4.8	M6×0.75	29	13.6	9 600	4 600	0.13
9/16	JELS202-009W3	0.5625	1.5748	1.126	0.7480	0.5118	0.024	0.016	0.256	0.870	0.189	1/4-28UNF	1.142	0.535	2 160	1 030	0.26
5/8	JELS202-010W3	0.6250															0.24
17	JELS203W3	17	40	28.6	19	13	0.6	0.4	6.5	22.1	4.8	M6×0.75	29	13.6	9 600	4 600	0.10
11/16	JELS203-011W3	0.6875	1.5748	1.126	0.7480	0.5118	0.024	0.016	0.256	0.870	0.189	1/4-28UNF	1.142	0.535	2 160	1 030	0.22
20	JELS204W3	20	47	31	21.5	15	1	0.6	7.5	23.5	4.8	M6×0.75	33	13.5	12 800	6 650	0.18
3/4	JELS204-012W3	0.7500	1.8504	1.220	0.8465	0.5906	0.039	0.024	0.295	0.925	0.189	1/4-28UNF	1.299	0.531	2 890	1 500	0.42
25	JELS205W3	25	52	31	21.5	15	1	0.6	7.5	23.5	4.8	M6×0.75	38	13.5	14 000	7 850	0.20
13/16	JELS205-013W3	0.8125	2.0472	1.220	0.8465	0.5906	0.039	0.024	0.295	0.925	0.189	1/4-28UNF	1.496	0.531	3 150	1 770	0.54
7/8	JELS205-014W3	0.8750															0.51
15/16	JELS205-015W3	0.9375															0.48
1	JELS205-100W3	1.0000															0.44
30	JELS206W3	30	62	35.7	23.8	18	1	1	9	26.7	6	M8×1	44.5	15.9	19 500	11 300	0.34
1 1/16	JELS206-101W3	1.0625	2.4409	1.406	0.9370	0.7087	0.039	0.039	0.354	1.051	0.236	5/16-24UNF	1.752	0.626	4 400	2 540	0.84
1 1/8	JELS206-102W3	1.1250															0.79
1 3/16	JELS206-103W3	1.1875															0.75
1 1/4	JELS206-104W3	1.2500															0.70
35	JELS207W3	35	72	38.9	25.4	19	1.5	1.5	9.5	29.4	6.8	M10×1.25	55.5	17.5	25 700	15 300	0.53
1 1/4	JELS207-104W3	1.2500	2.8346	1.531	1.0000	0.7480	0.059	0.059	0.374	1.157	0.268	3/8-24UNF	2.185	0.689	5 750	3 450	1.29
1 5/16	JELS207-105W3	1.3125															1.24
1 3/8	JELS207-106W3	1.3750															1.18
1 7/16	JELS207-107W3	1.4375															1.12
40	JELS208W3	40	80	43.7	30.2	22	1.5	1.5	11	32.7	6.8	M10×1.25	60	18.3	29 100	17 800	0.71
1 1/2	JELS208-108W3	1.5000	3.1496	1.720	1.1890	0.8661	0.059	0.059	0.433	1.287	0.268	3/8-24UNF	2.362	0.720	6 550	4 000	1.64
1 9/16	JELS208-109W3	1.5625															1.57

Ball bearings

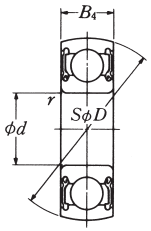

Shaft dia. mm	Bearing number	Nominal dimensions mm inch d	D	B_4	r min.	Basic load ratings N lbf dynamic C_r	static C_{or}	Mass kg lb
10	CS200LLU	10 0.3937	30 1.1811	9 0.3543	0.6 0.024	5 100 1 150	2 390 540	0.03 0.07
12	CS201LLU	12 0.4724	32 1.2598	10 0.3937	0.6 0.024	6 100 1 370	2 750 615	0.04 0.09
15	CS202LLU	15 0.5906	35 1.3780	11 0.4331	0.6 0.024	7 750 1 740	3 600 805	0.04 0.09
17	CS203LLU	17 0.6693	40 1.5748	12 0.4724	0.6 0.024	9 600 2 160	4 600 1 030	0.06 0.13
20	CS204LLU	20 0.7874	47 1.8504	14 0.5512	1 0.039	12 800 2 890	6 650 1 500	0.10 0.22
25	CS205LLU	25 0.9843	52 2.0472	15 0.5906	1 0.039	14 000 3 150	7 850 1 770	0.13 0.29
30	CS206LLU	30 1.1811	62 2.4409	16 0.6299	1 0.039	19 500 4 400	11 300 2 540	0.20 0.44
35	CS207LLU	35 1.3780	72 2.8346	17 0.6693	1.5 0.059	25 700 5 750	15 300 3 450	0.29 0.64
40	CS208LLU	40 1.5748	80 3.1496	18 0.7087	1.5 0.059	29 100 6 550	17 800 4 000	0.37 0.82

NSK LTD.-HEADQUARTERS, TOKYO, JAPAN

www.nsk.com

Nissei Bldg., 1-6-3 Ohsaki, Shinagawa-ku, Tokyo 141-8560, Japan

INDUSTRIAL MACHINERY BUSINESS DIVISION-HEADQUARTERS
P: 03-3779-7227 F: 03-3779-7644 C: 81

GLOBAL AFTERMARKET DEPARTMENT
P: 03-3779-7253 F: 03-3779-7644 C: 81

PRECISION MACHINERY DEPARTMENT
P: 03-3779-7163 F: 03-3779-7644 C: 81

MECHATRONICS BUSINESS DEPARTMENT
P: 0466-21-3027 F: 0466-21-3206 C: 81

AUTOMOTIVE BUSINESS DIVISION-HEADQUARTERS
P: 03-3779-7189 F: 03-3779-7917 C: 81

●Africa

South Africa:

NSK SOUTH AFRICA (PTY) LTD.
JOHANNESBURG 25 Galaxy Avenue, Linbro Business Park, Sandton, Gauteng, P.O. Box 1157, Kelvin, 2054, South Africa
P: 011-458-3600 F: 011-458-3608 C: 27

●Asia and Oceania

Australia:

NSK AUSTRALIA PTY. LTD. www.au.nsk.com
MELBOURNE 11 Dalmore Drive, Scoresby, Victoria 3179, Australia
P: 03-9764-8302 F: 03-9764-8304 C: 61
SYDNEY 24-28 River Road West, Parramatta, New South Wales 2150, Australia
P: 02-8843-8100 F: 02-9893-8406 C: 61
BRISBANE 1/69 Selhurst Street, Coopers Plains, Queensland 4108, Australia
P: 07-3347-2600 F: 07-3345-5376 C: 61
PERTH Unit 1, 71 Tacoma Circuit, Canning Vale, Western Australia 6155, Australia
P: 08-9256-5000 F: 08-9256-1044 C: 61

China:

NSK HONG KONG LTD.
HONG KONG Suite 814, World Commerce Centre, Harbour City, T.S.T. KLN, Hong Kong
P: 02739-9933 F: 02739-9323 C: 852
SHENZHEN Room 8808-09, Jueshi Tower, Jiabing Road, Luohu, Shenzhen, China (518001)
P: 0755-25904886 F: 0755-25904883 C: 86

KUNSHAN NSK CO., LTD.
OFFICE/PLANT 258 South Huang Pu Jiang Rd., Kunshan Economic & Technical Development Zone, Jiang Su, China (215335)
P: 0512-5771-5654 F: 0512-5771-5689 C: 86

CHANGSHU NSK NEEDLE BEARING CO., LTD.
OFFICE/PLANT No. 66 Dongnan Road, Changshu Southeast Economic Development Zone, Changshu City, Jiangsu, China (215500)
P: 0512-5230-1111 F: 0512-5230-6011 C: 86

NSK STEERING SYSTEMS DONGGUAN CO., LTD.
OFFICE/PLANT High-tech Park, Shilong Road, Guanlong Section, Dongguan, Guangdong, China (523119)
P: 0769-2262-0960 F: 0769-2316-2867 C: 86

ZHANGJIAGANG NSK PRECISION MACHINERY CO., LTD.
OFFICE/PLANT No. 34 Zhenxing Road, Zhangjiagang Economic Development Zone, Zhangjiagang City, Jiangsu Province, China (215600)
P: 0512-5867-6496 F: 0512-5818-0970 C: 86

SUZHOU NSK BEARINGS CO., LTD.
OFFICE/PLANT No. 22 Taishan Road, Suzhou New District, Jiangsu, China (215129)
P: 0512-6665-5666 F: 0512-6665-9138 C: 86

NSK (CHINA) RESEARCH & DEVELOPMENT CO., LTD.
JIANGSU No.8 NSK Rd., Huaqiao Economic Development Zone, Kunshan, Jiangsu, China (215332)
P: 0512-5796-3000 F: 0512-5796-3300 C: 86

NSK (SHANGHAI) TRADING CO., LTD.
JIANGSU 10th Fl. Building No.A, Shanghai Far East International Plaza, 319 Xian Xia Road, Shanghai, China (200051)
P: 021-6235-0198 F: 021-6235-1858 C: 86

NSK (CHINA) INVESTMENT CO., LTD. www.nsk.com.cn
HEAD OFFICE No.8 NSK Rd., Huaqiao Economic Development Zone, Kunshan, Jiangsu, China (215332)
P: 0512-5796-3000 F: 0512-5796-3300 C: 86
BEIJING Room 2116, Beijing Fortune Bldg., 5 Dong San Huan Bei Lu, Chao Yang District, Beijing, China (100004)
P: 010-6590-8161 F: 010-6590-8166 C: 86
GUANGZHOU Room 3101/3102/3106A, Guangdong Telecom Plaza, 18 Zhongshan Er Road, Guangzhou, Guangdong, China (510080)
P: 020-3786-4833 F: 020-3786-4501 C: 86
CHENGDU Room1117, Lippo Tower, No.62 North Kehua Road, Chengdu, Sichuan, China (610041)
P: 028-8526-2690 F: 028-8526-2690 C: 86

AKS PRECISION BALL (HANGZHOU) CO., LTD.
PLANT No. 189 Hongda Road, Xiaoshan Area of Economic & Technological Development Zone, Hangzhou, Zhejiang, China (311231)
P: 0571-2280-1288 F: 0571-2280-1268 C: 86

NSK-YAGI PRECISION FORGING (ZHANGJIAGANG) CO., LTD.
PLANT No. 34 Zhenxing Road, Zhangjiagang Economic Development Zone, Zhangjiagang City, Jiangsu Province, China (215600)
P:0512-5867-6496 F:0512-5818-0970 C:86

NSK-WANDA ELECTRIC POWER ASSISTED STEERING SYSTEMS CO.,LTD.
OFFICE/PLANT 1833 Yatai Road, Wenyan Town, Xiaoshan, Hangzhou, Zhejiang, China (311258)
P:0571-8231-4818 F:0571-8248-6656 C:86

India:

RANE NSK STEERING SYSTEMS LTD.
CHENNAI 14, Rajagopalan Salai, Vallancherry, Guduvancherry, Tamil Nadu-603 202, India
P:044-474-06017 F:044-274-66001 C:91
BAWAL Plot No.28A, Sector 6, HSIIDC Growth Centre Bawal, District Rewari, Haryana -123 501, India
P:01284-264281 F:01284-264280 C:91

NSK INDIA SALES CO.PVT.LTD.
CHENNAI New No.7, Old No.5, Boat Club Road, Chennai-600 028, India
P:044-2433-1161 F:044-2433-1160 C:91
GURGAON 107, Park Centra, Sector-30, Opposite 32nd Milestone, NH-8, Gurgaon, Haryana-122 001, India
P:0124-4104-530 F:0124-4104-532 C:91
KOLKATA 502, Trinity Towers, 83, Topsia Road, Kolkata-700 046, India
P:033-4001-2062 F:033-4001-2064 C:91
MUMBAI 321, A Wing, Ahura Centre, 82, Mahakali Caves Road, Andheri East, Mumbai -400 093, India
P:022-2838-7787 F:022-2838-5191 C:91

NSK-ABC BEARINGS LTD.
OFFICE/PLANT Plot No.A2, SIPCOT Growth Centre, Oragadam, Mathur Village, Sriperumbudur Taluk, Kancheepuram District, Tamil Nadu-602 105, India
P:044-2714-3000 F:044-2714-3099 C:91

Indonesia:

PT. NSK BEARINGS MANUFACTURING INDONESIA
JAKARTA PLANT Blok M4, Kawasan Berikat MM2100 Industrial Town Cikarang Barat, Bekasi 17520, Indonesia
P: 021-898-0155 F: 021-898-0156 C: 62

PT. NSK INDONESIA www.id.nsk.com
JAKARTA Summitmas II, 6th Floor, Jl. Jend Sudirman Kav. 61-62, Jakarta 12190, Indonesia
P: 021-252-3458 F: 021-252-3223 C: 62

PT. NSK-WARNER INDONESIA
BEKASI MM2100 Industrial Town, Cikarang Barat, Bekasi 17520, Indonesia
P: 021-8998-3216 F: 021-8998-3218 C: 62

Korea:

NSK KOREA CO., LTD. www.kr.nsk.com
SEOUL Posco Center (West Wing) 9F, 892, Daechi-4Dong, Kangnam-Ku, Seoul, 135-777, Korea
P: 02-3287-0300 F: 02-3287-0345 C: 82
CHANGWON 60, Seongsan-Dong, Changwon, Kyungsangnam-Do, 641-315, Korea
PLANT P: 055-287-6001 F: 055-285-9982 C: 82

Malaysia:

NSK BEARINGS (MALAYSIA) SDN. BHD. www.my.nsk.com
HEAD OFFICE No. 2, Jalan Pemaju, U1/15, Seksyen U1, Hicom Glenmarie Industrial Park, 40150 Shah Alam, Selangor, Malaysia
P: 03-7803-8859 F: 03-7806-5982 C: 60
PRAI No.36, Jalan kikik, Taman Inderawasih, 13600 Prai, Penang, Malaysia
P: 04-3902275 F: 04-3991830 C: 60
JOHOR BAHRU 88 Jalan Ros Merah 2/17, Taman Johor Jaya, 81100 Johor Bahru, Johor, Malaysia
P: 07-3546290 F: 07-3546291 C: 60
KOTA KINABALU Lot 10, Lrg Kurma 4, Likas Ind. Centre, 5/12 Miles Jln Tuaran, 88450 Inanam, Sabah, Malaysia
P: 088-421260 F: 088-421261 C: 60
IPOH Gr. Floor, 89 Jalan Bendahara, 31650 Ipoh, Perak, Malaysia
P: 05-2555000 F: 05-2553373 C: 60

NSK MICRO PRECISION (M) SDN. BHD. www.my.nsk.com
MALAYSIA PLANT No.43 Jalan Taming Dua,Taman Taming Jaya 43300 Balakong, Selangor Darul Ehsan, Malaysia
P: 03-8961-3960 F: 03-8961-3968 C: 60

New Zealand:

NSK NEW ZEALAND LTD. www.nsk-rhp.co.nz
AUCKLAND 6-7 Avenger Place, 4B Wolfbrooke, Auckland, New Zealand

Worldwide Sales Offices and Manufacturing Plants P: Phone F: Fax C: Country Code Printed in Japan

TAIWAN NSK TECHNOLOGY CO., LTD.
TAIPEI 11F., No. 87, Songjiang Rd., Jhongshan District, Taipei City 104, Taiwan R.O.C.
P: 02-2509-3305 F: 02-2509-1393 C: 886

Thailand:

NSK BEARINGS (THAILAND) CO.,LTD.
BANGKOK 26 Soi On-Nuch 55/1 Pravet District, Bangkok 10250, Thailand
P: 02320-2555 F: 02320-2826 C: 66

NSK BEARINGS MANUFACTURING (THAILAND) CO., LTD.
OFFICE/PLANT 700/430 Moo 7, Amata Nakorn Industrial Estate, T.Donhualor, A.Muangchonburi, Chonburi 20000, Thailand
P: 038-454-010 F: 038-454-017 C: 66

SIAM NSK STEERING SYSTEMS CO., LTD.
OFFICE/PLANT 90 Moo 9, Wellgrow Industrial Estate, Km.36 Bangna-Trad Rd., Bangwao, Bangpakong, Chachoengsao 24180, Thailand
P: 038-522-943 F: 038-522-351 C: 66

NSK ASIA PACIFIC TECHNOLOGY CENTRE (THAILAND) CO., LTD.
CHONBURI 700/430 Moo 7, Amata Nakorn Industrial Estate, T.Donhualor, A.Muangchonburi, Chonburi 20000, Thailand
P: 038-454-631 F: 038-454-634 C: 66

Vietnam:

NSK VIETNAM CO., LTD.
HEAD OFFICE Techno Center, Room 204-205, Thang Long Industrial Park, Dong Anh District, Hanoi, Vietnam
P: 04-3955-0159 F: 04-3955-0158 C: 84

NSK REPRESENTATIVE OFFICE
HO CHI MINH CITY Suite 307, Metropolitan Building, 235 Dong Khoi Street, District 1,HCMC, Vietnam
P: 08-3822-7907 F: 08-3822-7910 C: 84

●Europe

NSK EUROPE LTD. (EUROPEAN HEADQUARTERS) www.eu.nsk.com
MAIDENHEAD Belmont Place, Belmont Road, Maidenhead, Berkshire SL6 6TB, U.K.
P: 01628-509-800 F: 01628-509-808 C: 44

France:

NSK FRANCE S.A.S.
PARIS Quartier de l'Europe, 2 Rue Georges Guynemer, 78283 Guyancourt, France
P: 01-30-57-39-39 F: 01-30-57-00-01 C: 33

Germany:

NSK DEUTSCHLAND GMBH
HEAD OFFICE Harkortstrasse 15, D-40880 Ratingen, Germany
P: 02102-4810 F: 02102-4812-290 C: 49
STUTTGART Liebknechtstrasse 33, DE-70565 Stuttgart-Vahingen, Germany
P: 0711-79082-0 F: 0711-79082-289 C: 49
WOLFSBURG Heinrich-Nordhoff-Strasse 101, D-38440 Wolfsburg, Germany
P: 05361-27647-10 F: 05361-27647-70 C: 49
INGOLDSTADT Ingoldstadt, D-85055 Ingoldstadt, Germany
P: 0841-901-4640 F: 0841-901-4642 C: 49

NSK PRECISION EUROPE GMBH
DÜSSELDORF Harkortstrasse 15, D-40880 Ratingen, Germany
P: 02102-4810 F: 02102-4812-290 C: 49

NEUWEG FERTIGUNG GMBH
OFFICE/PLANT Ehinger Strasse 5, D-88597 Munderkingen, Germany
P: 07393-540 F: 07393-5414 C: 49

Italy:

NSK ITALIA S.P.A.
MILANO Via Garibaldi 215, Garbagnate Milanese (Milano) 20024, Italy
P: 0299-5191 F: 0299-028373 C: 39

INDUSTRIA CUSCINETTI S.P.A.
TORINO PLANT Via Giotto 4, I-10080, S. Benigno C. se (Torino), Italy
P: 011-982-4811 F: 011-988-0284 C: 39

Netherlands:

NSK EUROPEAN DISTRIBUTION CENTRE B.V.
De Kroonstraat 38, 5048 AP Tilburg, Netherlands
P: 013-4647647 F: 013-4647648 C: 31

Poland:

NSK EUROPE LTD. REPRESENTATIVE OFFICE
WARSAW Ul. Migdalowa 4/73, 02-796, Warsaw, Poland
P: 022-645-1525 F: 022-645-1529 C: 48

NSK BEARINGS POLSKA S.A.
OFFICE/PLANT Ul. Jagiellonska 109, 25-734 Kielce, Poland
P: 041-366-5951 F: 041-367-0690 C: 48

United Kingdom:

NSK BEARINGS EUROPE LTD.
PETERLEE 3 Brindley Road, South West Industrial Estate, Peterlee, Co. Durham SR8 2JD, U.K.
PLANT P: 0191-586-6111 F: 0191-586-3482 C: 44
NEWARK Northern Road, Newark, Nottinghamshire NG24 2JF, U.K.
PLANT P: 01636-605-123 F: 01636-605-000 C: 44

NSK EUROPEAN TECHNOLOGY CENTRE
NEWARK Northern Road, Newark, Nottinghamshire NG24 2JF, U.K.
P: 01636-605-123 F: 01636-643-241 C: 44

NSK UK LTD.
NEWARK Northern Road, Newark, Nottinghamshire NG24 2JF, U.K.
P: 01636-605-123 F: 01636-605-000 C: 44

NSK PRECISION UK LTD.
PLANT Northern Road, Newark, Nottinghamshire NG24 2JF, U.K.
P: 01636-605-123 F: 01636-605-000 C: 44

NSK STEERING SYSTEMS EUROPE LTD.
HEAD OFFICE Belmont Place, Belmont Road, Maidenhead, Berkshire SL6 6TB, U.K.
P: 01628-509-800 F: 01628-509-808 C: 44
PETERLEE 6/7 Doxford Drive, South West Industrial Estate, Peterlee, Co. Durham SR8 2PP, U.K.
PLANT P: 0191-518-6400 F: 0191-518-6421 C: 44

●North and South America

NSK AMERICAS, INC. (AMERICAN HEADQUARTERS)
ANN ARBOR 4200 Goss Road, Ann Arbor, Michigan 48105, U.S.A.
P: 734-913-7500 F: 734-913-7511 C: 1

Argentina:

NSK ARGENTINA SRL
BUENOS AIRES Garcia del Rio 2477 Piso 7 Oficina "A" (1429) Buenos Aires-Argentina
P: 11-4704-5100 F: 11-4704-0033 C: 54

Brazil:

NSK BRASIL LTDA. www.br.nsk.com
HEAD OFFICE Rua 13 de Maio, 1633-14th Andar-Bela Vista-CEP 01327-905 São Paulo, SP, Brazil
P: 011-3269-4786 F: 011-3269-4720 C: 55
SUZANO PLANT Av. Vereador Joao Batista Filipaldi, 66, CEP 08685-000, Vila Maluf, Suzano, SP, Brazil
P: 011-4744-2527 F: 011-4744-2529 C: 55
BELO HORIZONTE Rua Ceara 1431-4th andar-sala 405-Funcionarios Belo Horizonte-MG, Brazil 30150-311
P: 031-3274-2591 F: 031-3273-4408 C: 55
JOINVILLE Rua Blumenau, 178-sala 910-Centro Joinville-SC, Brazil 89204-250
P: 047-3422-5445 F: 047-3422-2817 C: 55
PORTO ALEGRE Av. Cristovão Colombo, 1694-sala 202-Floresta Porto Alegre-RS, Brazil 90560 001
P: 051-3222-1324 F: 051-3222-2599 C: 55
RECIFE Av. Conselheiro Aguiar, 2738-8th andar-conj. 804-Boa Viagem Recife-PE, Brazil 51020-020
P: 081-3326-3781 F: 081-3326-5047 C: 55

Canada:

NSK CANADA INC. www.ca.nsk.com
HEAD OFFICE 5585 McAdam Road, Mississauga, Ontario, Canada L4Z 1N4
P: 905-890-0740 F: 800-800-2788 C: 1
TORONTO 5585 McAdam Road, Mississauga, Ontario, Canada L4Z 1N4
P: 877-994-6675 F: 800-800-2788 C: 1
MONTREAL 2150-32E Avenue, Lachine, Quebec, Canada H8T 3H7
P: 514-633-1220 F: 800-800-2788 C: 1
VANCOUVER 3353 Wayburne Drive, Burnaby, British Columbia, Canada V5G 4L4
P: 877-994-6675 F: 800-800-2788 C: 1

Mexico:

NSK RODAMIENTOS MEXICANA, S.A. DE C.V. www.mx.nsk.com
MEXICO CITY Av. Presidente Juarez No.2007 Lote 5, Col. San Jeronimo Tepetlacalco, Tlalnepantla, Estado de Mexico, Mexico, C.P.54090
P: 55-3682-2900 F: 55-3682-2937 C: 52

United States of America:

NSK CORPORATION www.us.nsk.com
HEAD OFFICE 4200 Goss Road, Ann Arbor, Michigan 48105, U.S.A.
P: 734-913-7500 F: 734-913-7511 C: 1
NSK AMERICAN TECHNOLOGY CENTER 4200 Goss Road, Ann Arbor, Michigan 48105, U.S.A.
P: 734-913-7500 F: 734-913-7511 C: 1
CLARINDA PLANT 1100 N. First Street, Clarinda, Iowa 51632, U.S.A.
P: 712-542-5121 F: 712-542-6905 C: 1
FRANKLIN PLANT 3400 Bearing Drive, Franklin, Indiana 46131, U.S.A.
P: 317-738-5000 F: 317-738-5050 C: 1

NSK used environmentally friendly paper and printing methods for this publication.

CAT. No. E1154e 2010 E-3 Printed in Japan ©NSK Ltd. 2010